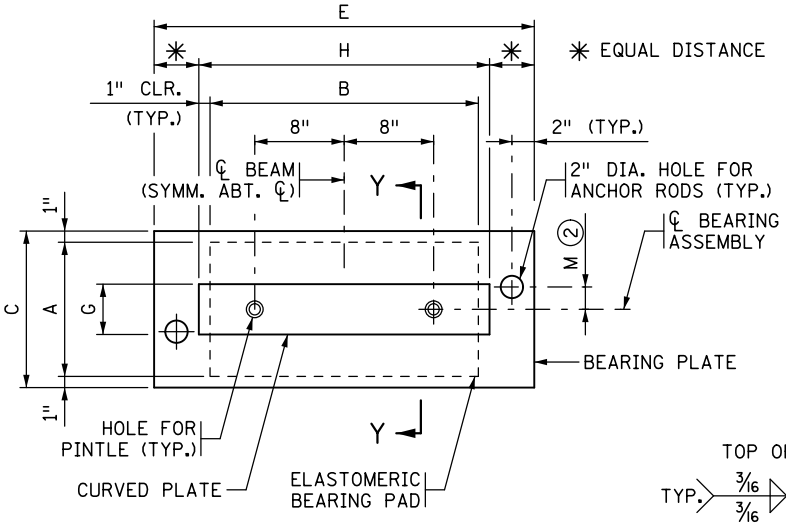

PLAN

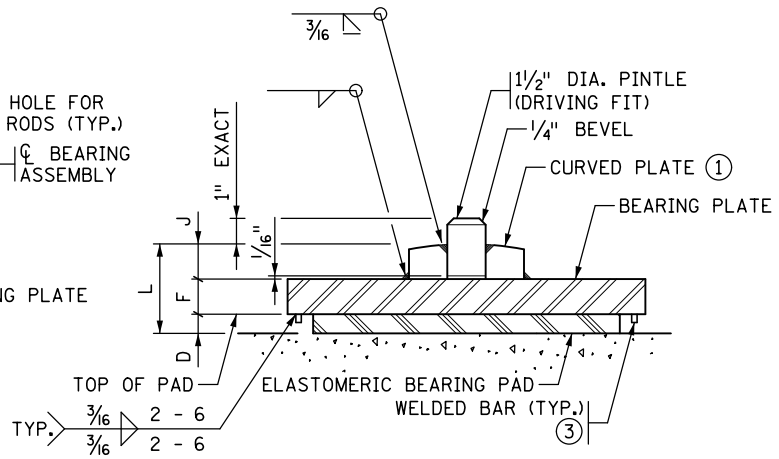

SECTION Y-Y

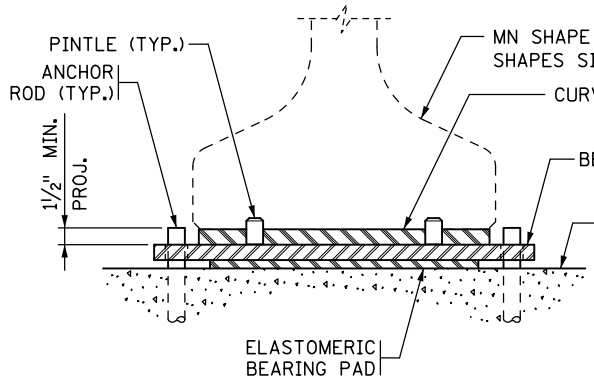

SECTION X-X

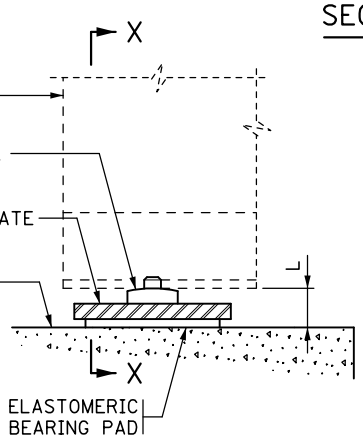

SIDE ELEVATION

ANCHOR RODS NOT SHOWN

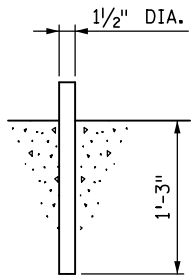

ANCHOR ROD DETAIL

TABLE

ASSEMBLY TYPE	LOCATION	BEAM SIZE	BEARING PAD SIZE			SHAPE FACTOR	BEARING PLATE SIZE			CURVED PLATE SIZE			ANCHOR ROD OFFSET		ASSY. HEIGHT	CURVED PLATE
			A	B	D		C	E	F	G	H	J	+/- ②	M	L	R ①
		RB, M, & MN	12"	24"	½"	8.0	14"		1½"	4½"	26"	1¼"			3¼"	
		MW	16"	36"	½"	11.1	18"		1½"	4½"	38"	1¼"			3¼"	

NOTES:

PROVIDE ELASTOMERIC MATERIALS AND PAD CONSTRUCTION PER SPEC. 3741.

PROVIDE STEEL PLATES PER SPEC. 3306.

PROVIDE ANCHOR RODS PER SPEC. 3385, TYPE A. GALVANIZE PER SPEC. 3392.

PROVIDE PINTLES PER SPEC. 3309.

GALVANIZE STRUCTURAL STEEL BEARING ASSEMBLY AFTER FABRICATION PER SPEC. 3394, EXCEPT AS NOTED.

PAYMENT FOR BEARING ASSEMBLY INCLUDES ALL MATERIAL ON THIS DETAIL.

① THE MIN. RADIUS IS 16" UNLESS OTHERWISE SPECIFIED IN THE TABLE. THE MAX. RADIUS IS 24". FINISH TO 250 MICRO. THE FINISHED THICKNESS OF THE PLATE MAY BE 1/16" LESS THAN SHOWN.

② "+" DENOTES OFFSET AS SHOWN.
"−" DENOTES OFFSET OPPOSITE OF SHOWN.

③ 3/8" X 3/8" BAR INSTALLED ON BEARING PLATE AROUND PERIMETER OF BEARING PAD. BAR LENGTH IS 2" LESS THAN ADJACENT PAD DIMENSION, CENTERED ON PAD. CENTERLINE OF BAR TO EDGE OF PAD DIMENSION = ½".

DESIGNER NOTE (REMOVE PRIOR TO PLOTTING FINAL PLAN):
MINIMUM SIZE OF BEARING PAD,
12" x 24" x ½", IS SHOWN FOR RB, M, & MN SHAPES
16" x 36" x ½", IS SHOWN FOR MW SHAPES

DESIGN DATA:

MAXIMUM HORIZONTAL LOAD IS 70 KIPS FOR 1½" PINTLES.

APPROVED: SEPTEMBER 22, 2011

Nancy Daubenberger
STATE BRIDGE ENGINEER

STATE OF MINNESOTA
DEPARTMENT OF TRANSPORTATION

CURVED PLATE BEARING ASSEMBLY
(PRESTRESSED CONCRETE BEAMS)
(FIXED)

REVISED
11-06-2013
11-03-2015

DETAIL NO.
B310