Index to Standard Plates for HydInfra Features

Page

1 Index
2 Typical Casting Combinations for Manholes and Catch Basins
3 Structure – Manhole or Catch Basin Type A or B Cone, Precast
4 Structure – Manhole or Catch Basin, Masonry (block or brick)
5 Manhole Cover Casting
6 Catch Basin Grate Casting (round)
7 Design PM and PC
8 Concrete Pipe “3000”
9 Cattle Pass Precast Concrete
10 Arch Pipe Concrete
11 Arch Pipe Concrete pg 2
12 Concrete Safety Apron
13 Concrete Flared Apron
14 Concrete Arch Flared Apron
15 Concrete Sectional Apron for Arch Pipe
16 CMP Pipe Round or Arch Dimensions
17 Structural Plate Arch Pipe Dimensions (18” corner radius)
18 Structural Plate Arch Pipe Dimensions (31” corner radius)
19 Metal Flared Apron for Arch Pipe
20 Metal Safety Apron (3128 F sh 2)
21 Metal Safety Apron (3128 F sh 1)
22 Metal Safety Apron (3128 H sh 1)
23 Metal Safety Apron (3128 H sh 2)
24 Cattle and Horse Pass Deformed Metal Culvert (Steel Plate)
25 Extension – CMP on Concrete Box

STATE OF MINNESOTA
DEPARTMENT OF TRANSPORTATION

TYPICAL CONCRETE MANHOLE OR CATCH BASIN AND CASTING COMBINATIONS

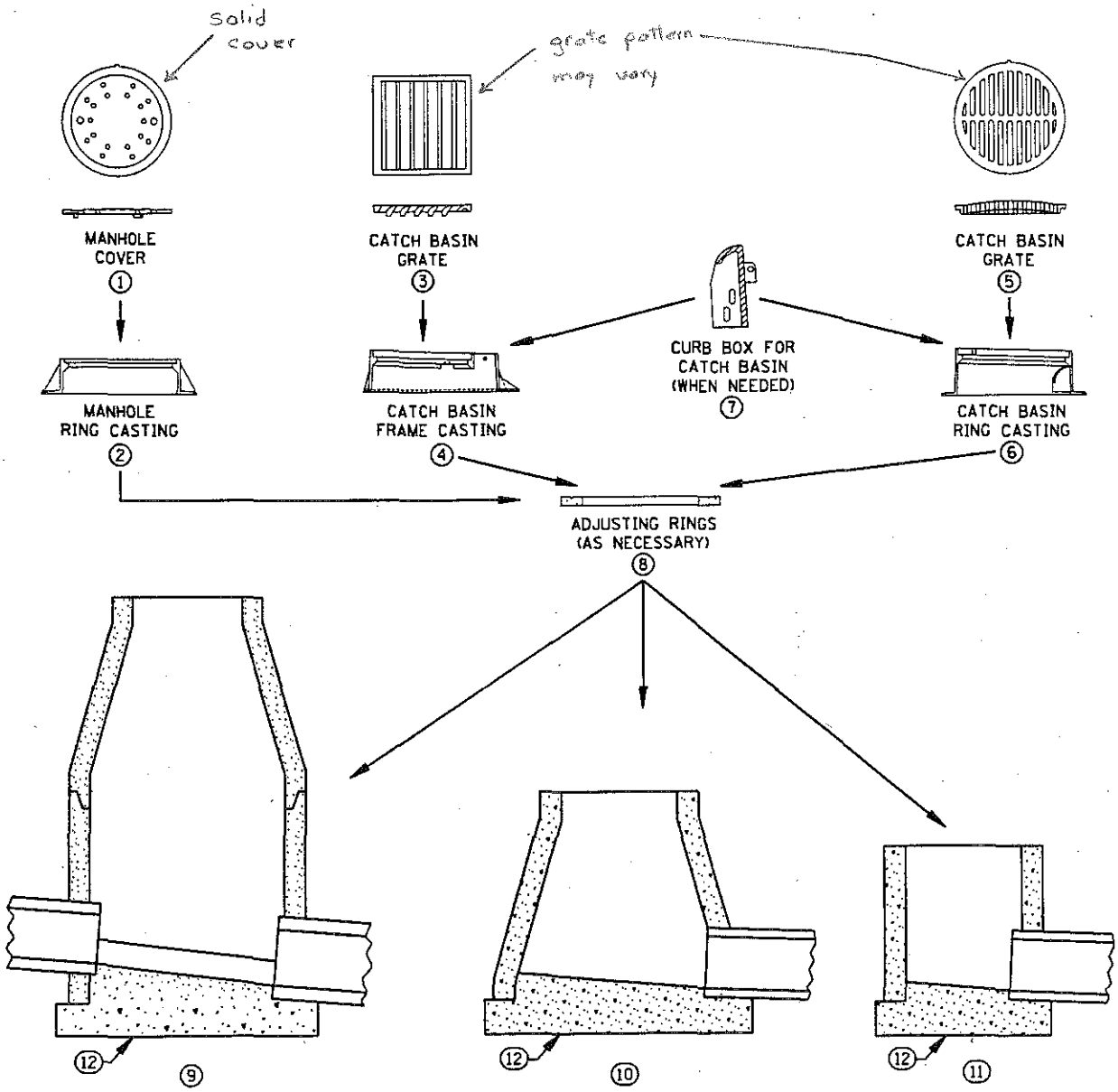

STRUCTURES

1. CASTING NO. 715
   PLATE NO. 4110
   CASTING NO. 716
   PLATE NO. 4110
2. CASTING NO. 700-4
   THRU NO. 700-10
   PLATE NO. 4101
3. CASTING NO. 811
   PLATE NO. 4151
   CASTING NO. 814A
   PLATE NO. 4152
   CASTING NO. 815
   PLATE NO. 4153
   CASTING NO. 816
   PLATE NO. 4154
4. CASTING NO. 802A
   PLATE NO. 4129
   CASTING NO. 805
   PLATE NO. 4132
   CASTING NO. 806
   PLATE NO. 4125
   ONLY WITH CURB BOX
5. CASTING NO. 720
   PLATE NO. 4140
   CASTING NO. 721
   PLATE NO. 4140
   CASTING NO. 810
   PLATE NO. 4149
6. CASTING NO. 801
   PLATE NO. 4126
   CASTING NO. 700-4
   THRU NO. 700-10
   PLATE NO. 4101
   CASTING NO. 731
   PLATE NO. 4143
7. CASTING NO. 821B
   PLATE NO. 4161
   CASTING NO. 822
   PLATE NO. 4161
   CASTING NO. 823A
   PLATE NO. 4160
   CASTING NO. 824
   PLATE NO. 4133
   CASTING NO. 825
   PLATE NO. 4134
   CASTING NO. 831A
   PLATE NO. 4161
   CASTING NO. 833A
   PLATE NO. 4160
8. PLATE NO. 4010
9. DESIGN A
   PLATE NO. 4000
   DESIGN F
   PLATE NO. 4005
10. DESIGN C
    PLATE NO. 4002
    DESIGN G
    PLATE NO. 4006
11. DESIGN H
    PLATE NO. 4006
12. PRECAST BASE
    PLATE NO. 4011

REFERENCE DATE: 10-19-95

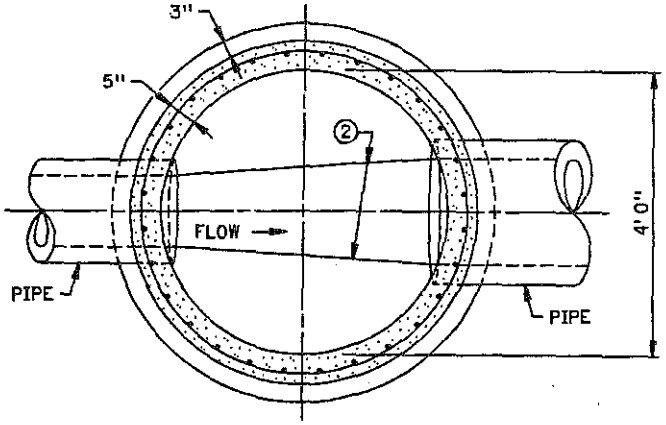

SECTION X-X

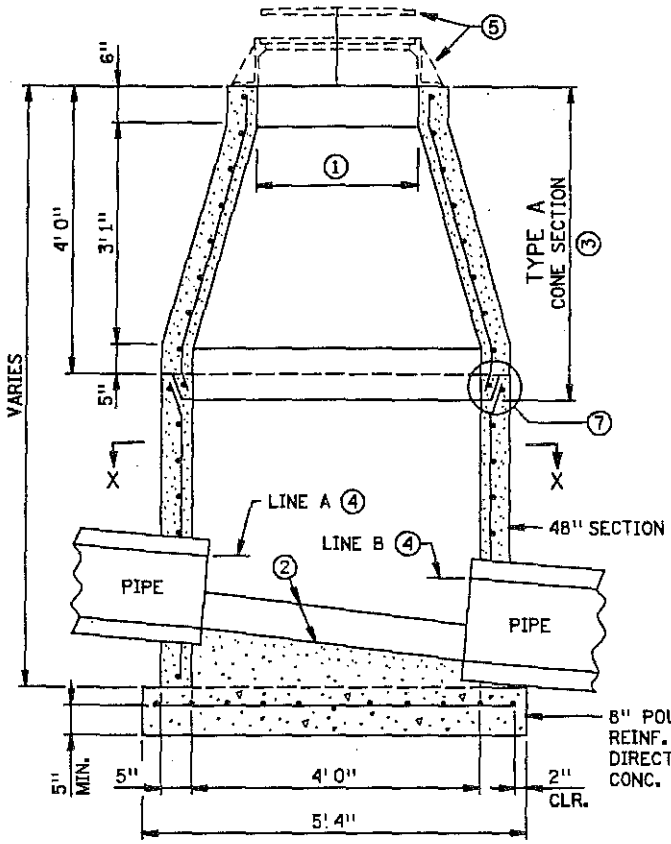

SECTIONAL VIEW

TYPE A CONE

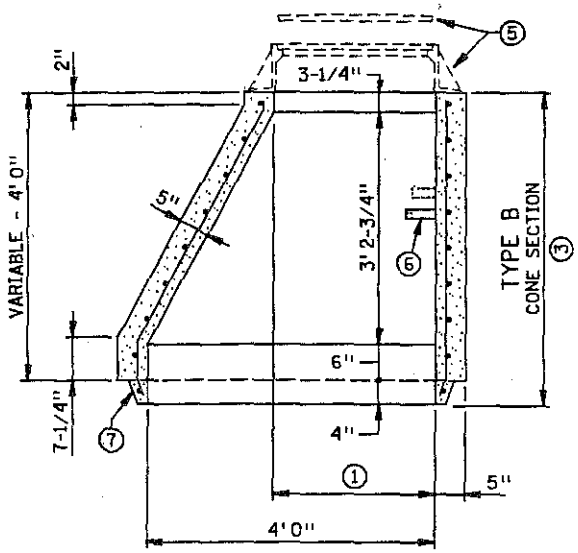

SECTIONAL VIEW

TYPE B CONE

SEE TYPE A CONE FOR ADDITIONAL INFORMATION

NOTES:

REINFORCING: SINGLE LINE STEEL WIRE FABRIC HAVING AN AREA OF NOT LESS THAN 0.12 SQ. IN. PER FOOT OF HEIGHT.

① 2'3" NOMINAL OPENING.

② PROVIDE MORTAR FILLETS TO FIT THE BOTTOM PORTION OF PIPE TO DIRECT FLOW TO OUTLET.

③ TYPE A CONE SECTION SHALL BE USED UNLESS OTHERWISE INDICATED IN THE PLANS. FOR SHORT CONE SECTION USE TYPE C. SEE STANDARD PLATE 4010.

④ THE ELEV. OF LINE A SHALL BE EQUAL TO OR ABOVE LINE B.

⑤ REFER TO PLAN FOR CASTINGS REQUIRED. USE ADJUSTING RINGS WHERE NECESSARY, SEE STANDARD PLATES INDEX. CASTING AND PRECAST CONC. ADJUSTING RINGS, SHALL BE SET ON FULL MORTAR BEDS.

⑥ REFER TO PLANS FOR ANY STEP REQUIREMENTS.

⑦ SEE STANDARD PLATES INDEX FOR OTHER APPROVED JOINTS.

DESIGN F

APPROVED JULY 31, 1995 Gerald J. Rosbach STATE DESIGN ENGINEER	STATE OF MINNESOTA DEPARTMENT OF TRANSPORTATION MANHOLE OR CATCH BASIN TYPE A & B CONE SECTIONS PRECAST	SPECIFICATION REFERENCE 2506 REVISED 8-22-96	STANDARD PLATE NO. 4005L

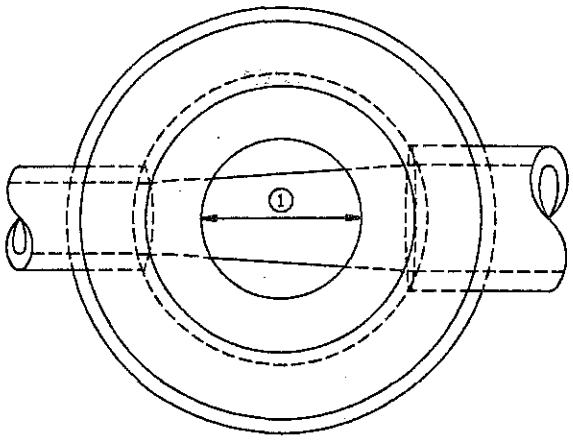

TOP VIEW

MASONRY & BRICK

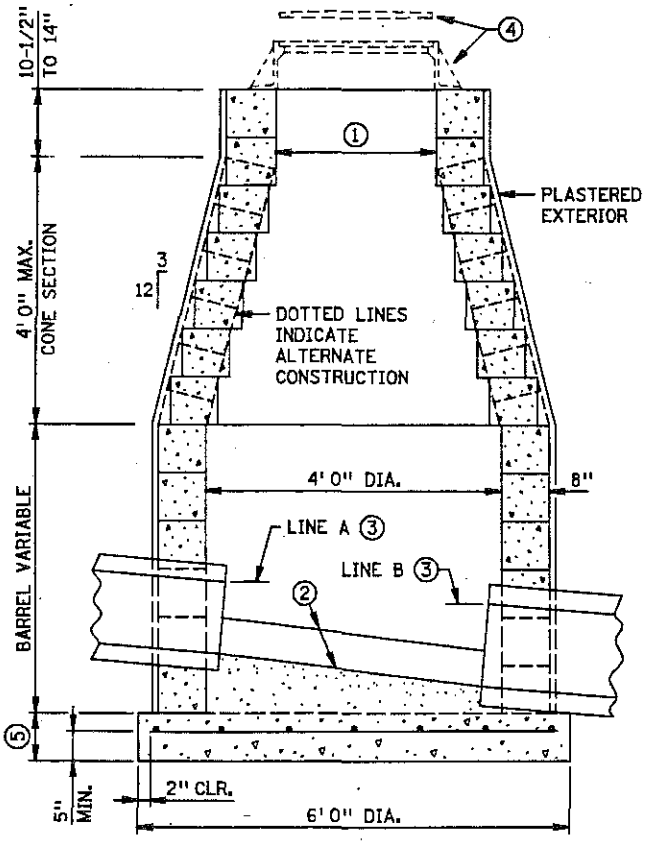

SECTION

MASONRY UNITS

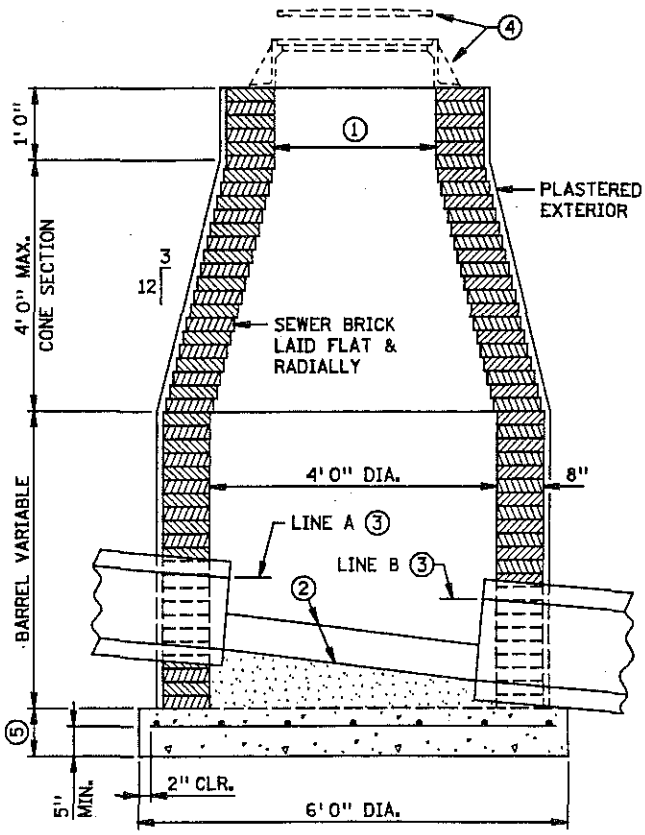

SECTION

SEWER BRICK

NOTES:

REFER TO PLANS FOR ANY STEP REQUIREMENTS.

(1) 2'3" NORMAL OPENING. WHEN GRATE FRAME CASTING NO. 806 (SEE STANDARD PLATES CASTING LIST) IS USED, THE OPENING SHALL BE 2'6".

(2) PROVIDE MORTAR FILLETS TO FIT THE BOTTOM PORTION OF THE STRUCTURE AS SHOWN, TO DIRECT THE FLOW TO THE OUTLET.

(3) THE ELEV. OF LINE A SHALL BE EQUAL TO OR ABOVE LINE B.

(4) REFER TO PLAN FOR CASTINGS REQUIRED. USE ADJUSTING RINGS WHERE NECESSARY, SEE STANDARD PLATES INDEX. CASTING AND PRECAST CONC. ADJUSTING RINGS, SHALL BE SET ON FULL MORTAR BEDS.

(5) 8" POURED CONCRETE BASE. FOR ALTERNATE PRECAST CONCRETE BASE, SEE STANDARD PLATES CASTING LIST. BASE REINFORCEMENT: 0.12 SQUARE INCHES PER FOOT IN EACH DIRECTION.

DESIGN A

APPROVED OCTOBER 17, 1994 Gerald J. Rohrich STATE DESIGN ENGINEER	STATE OF MINNESOTA DEPARTMENT OF TRANSPORTATION MANHOLE OR CATCH BASIN MASONRY FIELD CONSTRUCTED	SPECIFICATION REFERENCE 2506 REVISED 8-22-96	STANDARD PLATE NO. 4000J

APPROVED OCTOBER 25, 1996

STATE DESIGN ENGINEER

STATE OF MINNESOTA
DEPARTMENT OF TRANSPORTATION

COVER CASTING FOR MANHOLE

(FOR USE IN ALL TRAFFIC AREAS)

SPECIFICATION REFERENCE 2506

STANDARD PLATE NO. 411OF

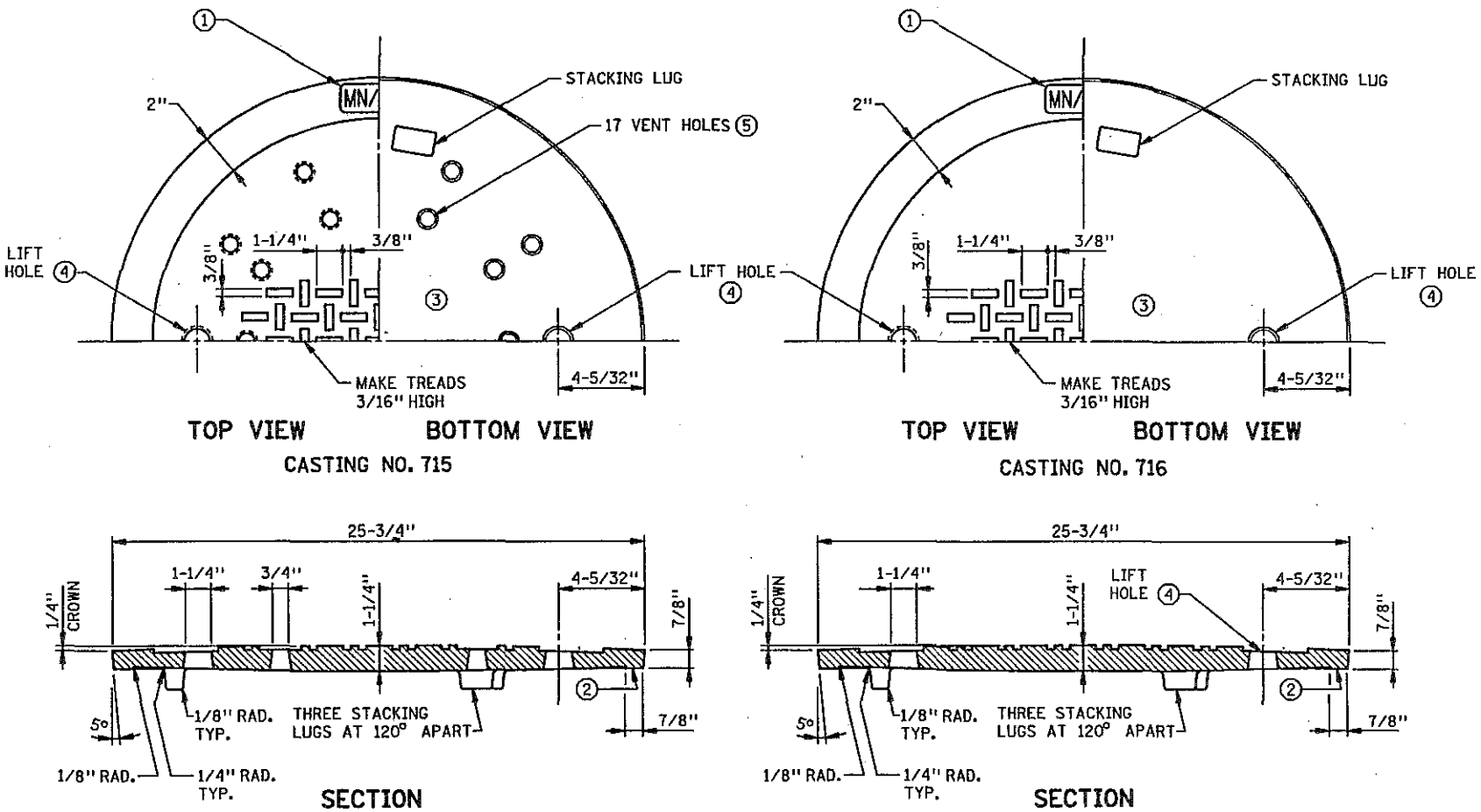

CASTING NO. 715 - 115 LBS.
CASTING NO. 716 - 118 LBS.

NOTES:

THESE COVERS TO BE USED WITH RING CASTING NO. 700-7 TO 700-10 OR FRAME CASTING NO. 770.

① ON OPPOSITE SIDE OF TOP SURFACE PLACE CASTING NUMBER, LETTERS (MN/DOT) AND NUMERALS TO BE 3/4" IN HEIGHT AND DEPRESSED 1/8".

② MACHINE FINISHED THICKNESS TO BE 13/16".

③ COVER SHALL BE MADE OF GRAY IRON. CLASS 35B.

④ LIFT HOLE 1-1/4" DIA. AT THE TOP, 1-1/2" AT THE BOTTOM.

⑤ EIGHT (8) VENT HOLES IN OUTER CIRCLE. NINE (9) VENT HOLES IN INNER CIRCLE. HOLES ARE 3/4" DIA. AT THE TOP AND 1" DIA. AT THE BOTTOM. INNER CIRCLE IS 2" FROM THE OUTER CIRCLE.

APPROVED Oct. 1, 1966
W. A. Ehern
ASSISTANT COMMISSIONER
ENGINEERING STANDARDS

STATE OF MINNESOTA
DEPARTMENT OF TRANSPORTATION

SPECIAL GRATE CASTINGS FOR CATCH BASIN

CONVEX AND CONCAVE

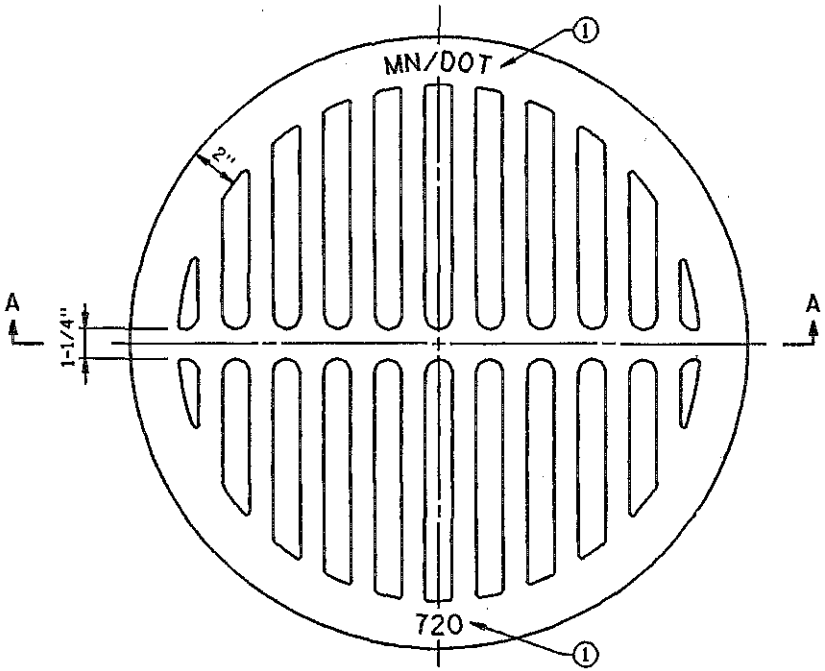

TOP VIEW
CASTING NO. 720

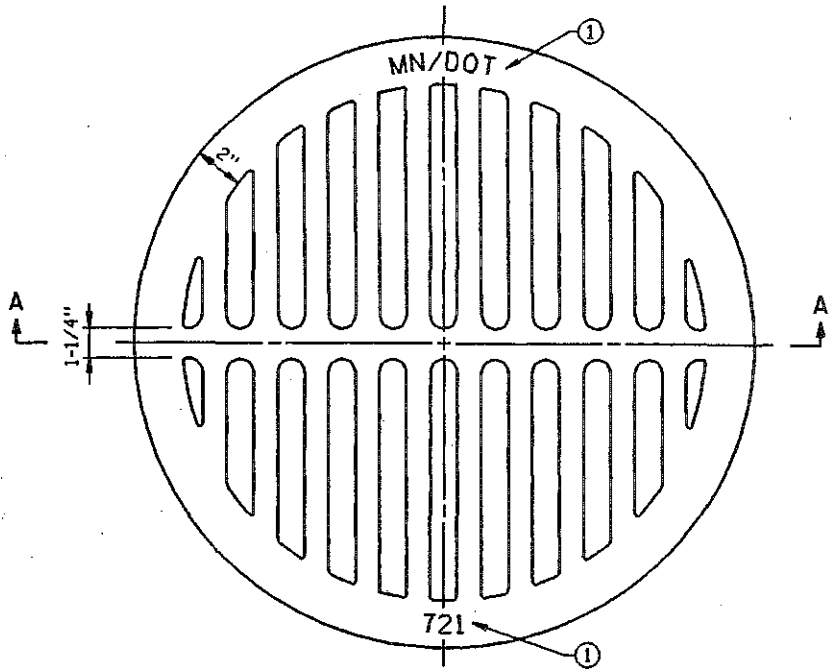

TOP VIEW
CASTING NO. 721

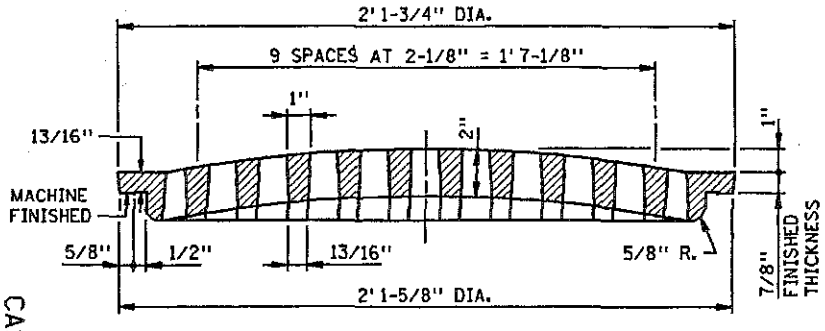

SECTION A-A
CONVEX

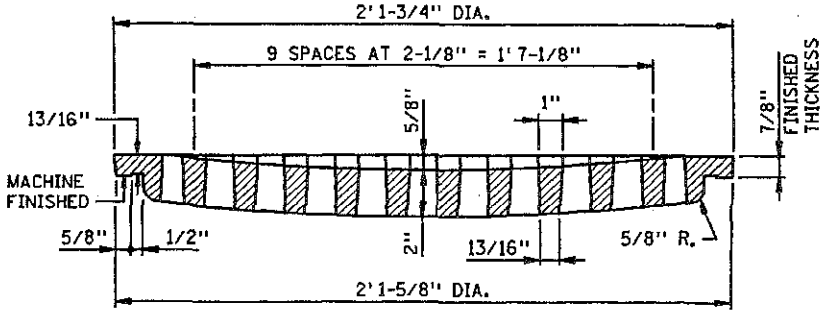

SECTION A-A
CONCAVE

NOTES:
THESE GRATES SHALL BE USED WITH RING CASTING NO. 700-7 TO 700-10.

(1) LETTERS (MN/DOT) AND NUMERALS (720 & 721) SHALL BE 3/4 INCHES IN HEIGHT AND DEPRESSED 1/8 INCHES.

CASTING NO. 720
CASTING NO. 721

SPECIFICATION REFERENCE 2506

REVISED 5-5-99 A.K.J.

STANDARD PLATE NO. 4140D

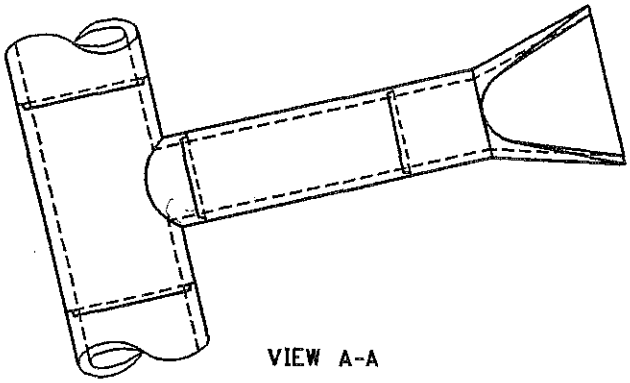

VIEW A-A

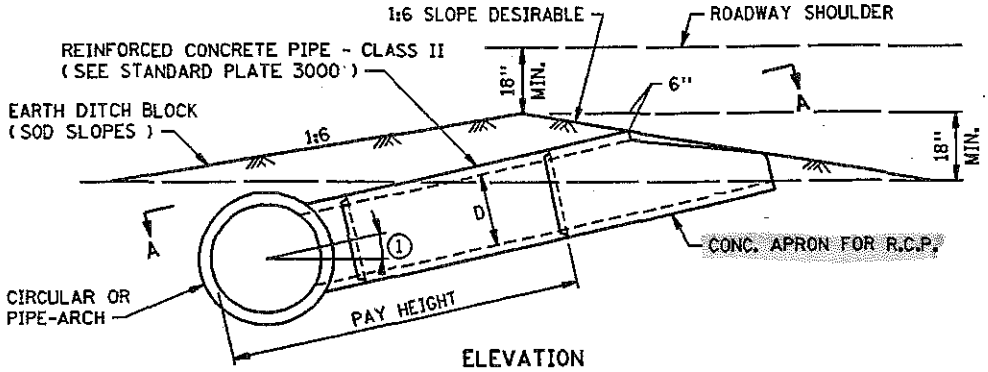

ELEVATION

REINFORCED CONCRETE PIPE

DESIGN PC

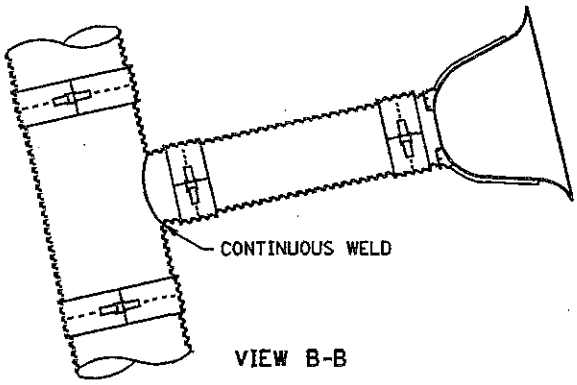

VIEW B-B

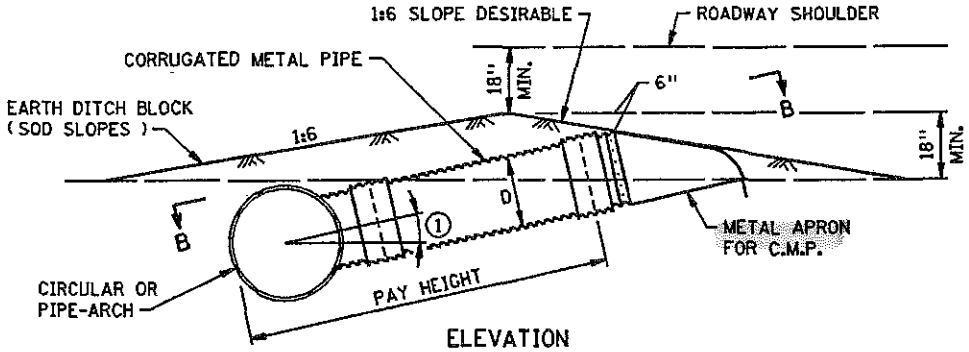

ELEVATION

CORRUGATED METAL PIPE

DESIGN PM

NOTES:

INSIDE DIAMETER OF CATCH BASIN WILL BE INDICATED IN THE PAY ITEM.

FOR USE PRINCIPALLY FOR MEDIAN DRAINAGE.

ANGLE WILL BE SHOWN IN PLAN FOR ARCH PIPE.

DESIGN PC
DESIGN PM

APPROVED Oct. 1, 1967 W. A. Ekern ASSISTANT COMMISSIONER ENGINEERING STANDARDS	STATE OF MINNESOTA DEPARTMENT OF TRANSPORTATION **CATCH BASIN** CONCRETE PIPE AND METAL PIPE	SPECIFICATION REFERENCE 2506 REVISED 4-19-01	STANDARD PLATE NO. 4017C

INTERNAL DIAMETER OF PIPE IN INCHES	CROSS SECTION WATER AREA	LENGHT OF JOINT	NOMINAL - A				
		J		D1	D2	D3	D4
D	SQ. FT.	INCHES					
12	0.79	1-3/4	3/16	13-1/4	13-5/8	13-7/8	14-1/4
15	1.23	2	3/16	16-1/2	16-7/8	17-1/4	17-5/8
18	1.77	2-1/4	3/16	19-5/8	20	20-3/8	20-3/4
21	2.40	2-1/2	3/16	22-7/8	23-1/4	23-3/4	24-1/8
24	3.14	2-3/4	3/16	26	26-3/8	27	27-3/8
27	3.98	3	3/16	29-1/4	29-5/8	30-1/4	30-5/8
30	4.91	3-1/4	3/16	32-3/8	32-3/4	33-1/2	33-7/8
33	5.94	3-1/2	1/4	35-1/2	36	36-3/4	37-1/4
36	7.07	3-3/4	1/4	38-3/4	39-1/4	40	40-1/2
42	9.62	4	1/4	45-1/8	45-5/8	46-1/2	47
48	12.57	4-1/4	1/4	51-1/2	52	53	53-1/2
54	15.90	4-1/2	1/4	57-7/8	58-3/8	59-3/8	59-7/8
60	19.63	5	1/4	64-1/4	64-3/4	66	66-1/2
66	23.76	5-1/2	1/4	70-5/8	71-1/8	72-1/2	73
72	28.27	6	1/4	77	77-1/2	79	79-1/2
78	33.18	6-1/2	1/4	83-3/8	83-7/8	85-5/8	86-1/8
84	38.48	7	1/4	89-3/4	90-1/4	92-1/8	92-5/8
90	44.18	7	1/4	95-3/4	96-1/4	98-1/8	98-5/8
96	50.27	7	1/4	102-1/8	102-5/8	104-1/2	105
102	56.75	7-1/2	1/4	109	109-1/2	111-1/2	112
108	63.62	7-1/2	1/4	115-1/2	116	118	118-1/2

TOLERANCES IN DIMENSIONS:

D: ± 1.5% FOR 12" TO 24" D, ± 1% OR 3/8" WHICHEVER IS GREATER FOR 27" TO 108" D.

D1, D2, D3, AND D4: ± 3/16" FOR 12" TO 30" D, ± 1/4" FOR 33" TO 108" D.

T: NOT LESS THAN THE DESIGN T BY MORE THAN 5% OR 3/16" WHICHEVER IS GREATER.

J: ALL SIZES ± 1/4".

LAYING LENGTH: SHALL NOT UNDERRUN BY MORE THAN 1/2".

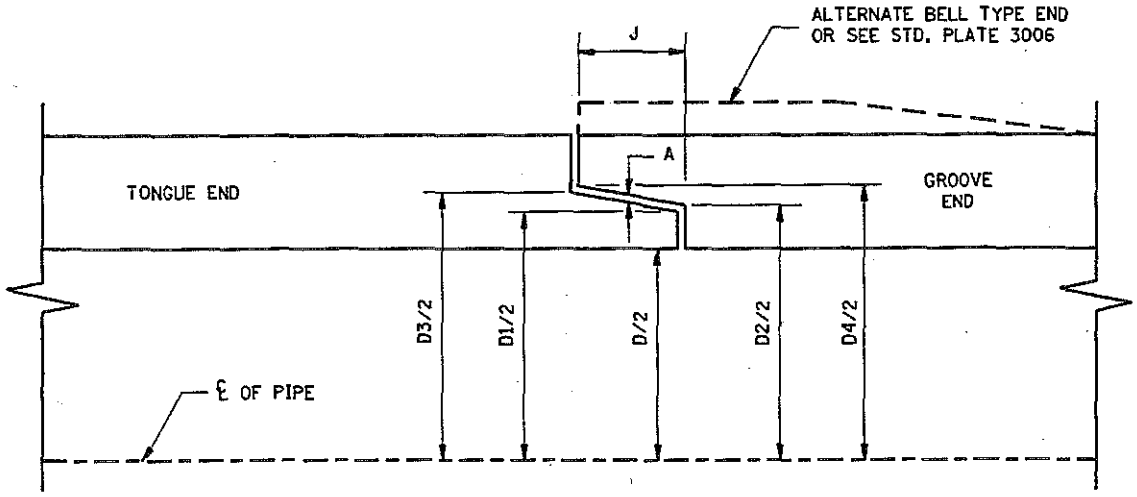

SECTION AT PIPE JOINT

APPROVED Aug. 31, 1989

Director
Materials, Research and Standards

STATE OF MINNESOTA
DEPARTMENT OF TRANSPORTATION

REINFORCED CONCRETE PIPE
JOINT DIMENSIONS FOR B-WALL AND C-WALL

SPECIFICATION REFERENCE
2501
2502
2503

STANDARD PLATE NO.
3000L
3 OF 5

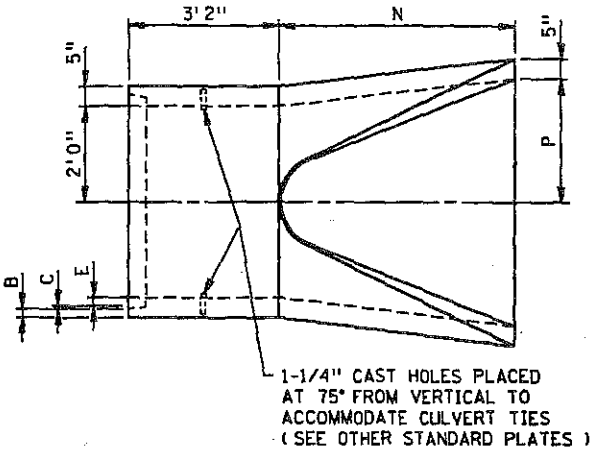

TOP VIEW

CONSTRUCTION NOTES:

IF THE SPLICES ARE NOT ELECTRICALLY WELDED, THE REINFORCEMENT SHALL BE LAPPED NOT LESS THAN 40 DIA.

IF SPLICES ARE ELECTRICALLY WELDED, MEMBERS AT EITHER A WELDED SPLICE OR INTERSECTION SHALL DEVELOP A TENSILE STRENGTH ACROSS THE WELD NOT LESS THAN THE MIN. REQUIRED STRENGTH OF THE FABRIC.

FOUR FT. LENGTHS SHALL BE USED ONLY TO SECURE REQUIRED LENGTH OF CATTLE PASS. SHORT LENGTH OF PIPE SHALL BE INSTALLED NEAR ENDS OF CATTLE PASS.

NOT MORE THAN TWO 4 FT. SECTIONS PERMITTED IN ANY CATTLE PASS.

FILL OVER TOP OF CATTLE PASS: 1 FT. MINIMUM, 15 FT. MAXIMUM.

DESIGN OF FLARED END SECTION SHALL CONFORM TO INTERMEDIATE SECTION.

ROUNDED EDGE PERMITTED ON SLOPED END.

PLACE GROOVED END UP GRADE AND TONGUE END DOWNGRADE.

ONE LIFT HOLE SHALL BE CAST IN EACH SECTION OF PIPE. TAPERED CONCRETE PLUGS SHALL BE FURNISHED FOR CLOSING LIFT HOLES.

TIE BOLTS SHALL BE EITHER THE ADJUSTABLE TIE OR THE U-BOLT TIE SHOWN IN STANDARD PLATE 3145. THESE SHALL BE INSERTED FROM THE INSIDE WITH THE NUTS ON THE OUTSIDE.

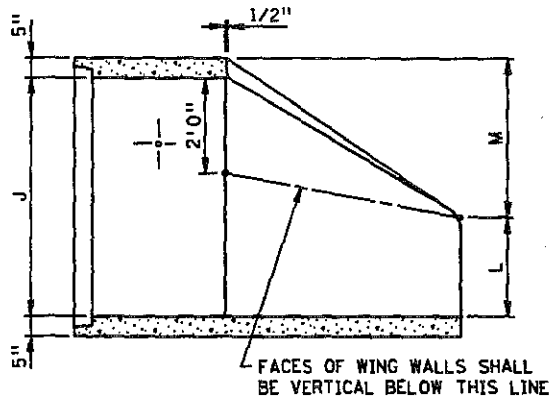

SECTION ON ℄

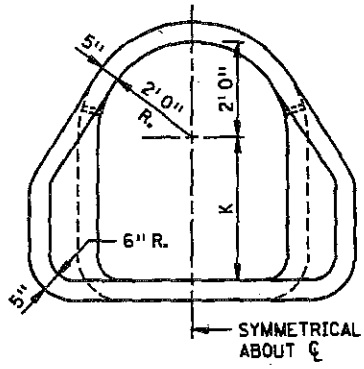

END VIEW

DIMENSIONS

	CATTLE PASS SIZE	
	60"	72"
B	2-1/8"	2"
C	5/8"	3/4"
E	2-1/4"	2-1/4"
F	2-1/16"	2"
G	5/8"	3/4"
H	2-5/16"	2-1/4"
I	4-1/2"	5"
J	5' 0"	6' 0"
K	3' 0"	4' 0"
L	2' 6"	2' 11"
M	2' 11"	3' 6"
N	5' 0"	7' 0"
P	3' 0"	3' 6"

ESTIMATED WEIGHT:
7,320 LBS. (60")
10,650 LBS. (72")

DETAILS OF FLARED END SECTION

(REINFORCEMENT NOT SHOWN)

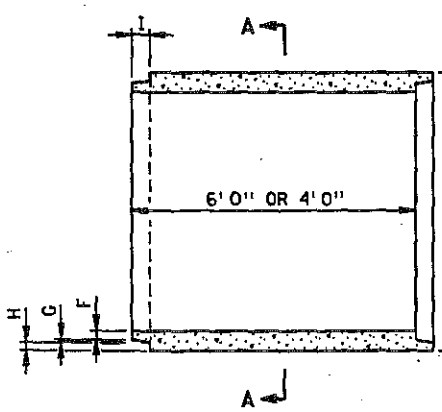

SECTION ON ℄

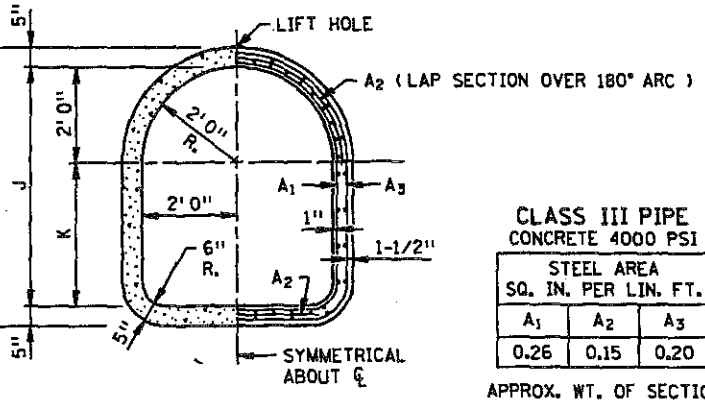

SECTION A-A

CLASS III PIPE

CONCRETE 4000 PSI

STEEL AREA SQ. IN. PER LIN. FT.		
A_1	A_2	A_3
0.26	0.15	0.20

APPROX. WT. OF SECTION
(60") 1110 LBS. PER FT.
(72") 1240 LBS. PER FT.

DETAILS OF INTERMEDIATE SECTION

APPROVED Feb. 16, 1978 Director Materials, Research and Standards	STATE OF MINNESOTA DEPARTMENT OF TRANSPORTATION REINFORCED PRECAST CONCRETE CATTLE PASS (60 IN. & 72 IN.)	SPECIFICATION REFERENCE 2501	STANDARD PLATE NO. 3020F

TABLE OF DIMENSIONS																
NOMINAL SPAN	EQUIVALENT DIAMETER(A)	WATER AREA	RISE	SPAN	DIMENSION REQUIREMENTS IN INCHES											APPROX. WT./FT.
IN.	IN. (A)	S.F.	IN.	IN.	t	a	b	c	j	e	f	g	R_1	R_2	R_3	LB.
22	18	1.7	13-1/2	22	2-1/2	1-3/8	3/8	3/4	2	1-1/8	3/8	1	27-1/2	13-3/4	5-1/4	175
28	24	2.8	18	28-1/2	3-1/2	1-5/8	1/2	1-3/8	3	1-3/8	1/2	1-5/8	40-11/16	14-3/4	4-5/8	320
36	30	4.4	22-1/2	36-1/4	4	1-13/16	5/8	1-9/16	3-1/2	1-9/16	5/8	1-13/16	51	18-3/4	6-1/8	455
44	36	6.4	26-5/8	43-3/4	4-1/2	2	3/4	1-3/4	4	1-3/4	3/4	2	62	22-1/2	6-1/2	610
51	42	8.8	31-5/16	51-1/8	4-1/2	2	3/4	1-3/4	4	1-3/4	3/4	2	73	26-1/4	7-3/4	740
58	48	11.4	36	58-1/2	5	2-1/4	3/4	2	5	2	3/4	2-1/4	84	30	8-7/8	895
65	54	14.0	40	65	5-1/2	2-1/2	3/4	2-1/4	5	2-1/4	3/4	2-1/2	92-1/2	33-3/8	10	1095
73	60	17.7	45	73	6	3-5/16	3/4	1-15/16	5	2-3/4	3/4	2-1/2	105	37-1/2	11	1345
88	72	25.6	54	88	7	3-13/16	1	2-3/16	6	3-1/4	1	2-3/4	126	45	13-5/16	1885
102	84	34.6	62	102	8	4-1/8	1	2-7/8	6	3-1/2	1	3-1/2	162-1/2	52	14-1/2	2490
115	90	44.5	72	115-1/2	8-1/2	4-1/4	1	3-1/4	7	3-3/4	1	3-3/4	183	59	18	2900
122	96	51.7	77-1/2	122-3/8	9	4-1/2	1	3-1/2	7	4	1	4	218	62	20	3510
138	108	66.0	87-1/8	138-1/2	10	5	1	4	7	4-1/2	1	4-1/2	269	70	22	4400
154	120	81.8	96-7/8	154	11	5-1/2	1	4-1/2	7	5	1	5	301-3/8	78	24	5400
169	132	99.1	106-1/2	168-3/4	10	5	1	4	7	4-1/2	1	4-1/2	329	85-5/8	26-7/8	5390

(A) EQUIVALENT DIAMETER EQUALS DIAMETER OF CIRCULAR PIPE WITH APPROXIMATELY EQUIVALENT CROSS-SECTION AREA.

STIRRUP REQUIREMENTS (B)																	
NOMINAL SPAN	EQUIVALENT DIAMETER(A)	TOP				BOTTOM											
						SIDES						CENTER					
		S	X	As1		S	Y			As1		S	Z			As1	
				IIIA	IVA		IIA	IIIA	IVA	IIA	IIIA	IVA		IIA	IIIA	IVA	IIIA	IVA
IN.	IN.	IN.	IN.			IN.							IN.					
73	60	5	2'8"		.20	4		1'8"	2'0"		.37	.66	5		1'8"	1'4"	.20	.20
88	72	5	3'2"		.20	4		2'0"	2'5"		.39	.65	5		2'0"	1'7"	.20	.20
102	84	6	3'8"		.20	4		2'3"	2'9"		.37	.64	6		2'3"	1'10"	.20	.20
115	90	6	4'2"		.20	4		2'6"	3'1"		.36	.69	6		2'6"	2'0"	.20	.20
122	96	7	4'5"		.20	4		2'9"	3'3"		.33	.67	7		2'9"	2'2"	.20	.20
138	108	7	5'0"		.20	4-1/2		3'1"	3'8"		.33	.68	7		3'1"	2'6"	.20	.20
154	120	8	5'6"		.20	5		3'5"	4'2"		.30	.62	8		3'5"	2'9"	.20	.20
169	132	7	5'11"	.20		4-1/2	3'9"	3'9"		.20	.42		7	3'9"	3'9"		.20	

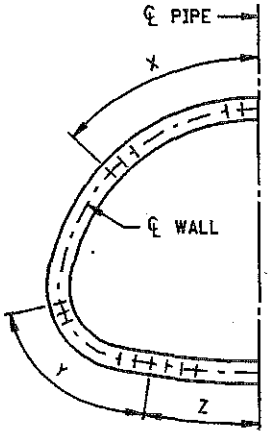

STIRRUP DETAILS

(B) SEE STANDARD PLATE 3007 FOR STIRRUP OPTIONS.
S = MAXIMUM STIRRUP SPACING IN INCHES MEASURED AT CENTERLINE OF WALL.
Ast = MINIMUM RADIAL REINFORCEMENT IN SQUARE INCHES PER SQUARE FOOT OF WALL MEASURED AT CENTERLINE OF WALL.
X, Y, & Z ARE MEASURED AT CENTERLINE OF WALL.

GENERAL NOTES:

1. LAYING LENGTHS: 22" TO 122" DIA. (6' & 8'), 138" DIA. (4' & 6'), 154" & 169" DIA. (4' & 5').
2. THREE-EDGE-BEARING-TEST REQUIREMENTS OF SPECIFICATION 3236 ARE NOT APPLICABLE.
3. BEDDING: CLASS "B" BEDDING, SPEC. 2451, REQUIRED.

BASIS OF DESIGN:

1. ULTIMATE STRENGTH ACCORDING TO 1977 AASHTO STANDARD SPECIFICATIONS FOR HIGHWAY BRIDGES, USING U = 1.5D + 2.5 (L+1).
2. LIVE LOAD BASED ON HS 20 LOADING WITH IMPACT AND DISTRIBUTION IN ACCORDANCE WITH 1977 AASHTO STANDARD SPECIFICATIONS FOR HIGHWAY BRIDGES.
3. FILL LOADS ON PIPE ARCH DETERMINED BY ACPA DESIGN DATA 17 PROCEDURE FOR POSITIVE PROJECTING CONDUIT, USING r_{sd} = 0.5, p = 0.7, w = 120 LBS./C.F., AND BEARING ASSUMED TO ACT ON 80% OF THE CULVERT WIDTH.
4. MAXIMUM DEPTH OF COVER, "EMBANKMENT CONDITION." ✳
   CLASS IIA 8 FT.
   CLASS IIIA 16 FT.
   CLASS IVA 23 FT.

✳MAXIMUM DEPTH OF COVER MAY BE INCREASED 25% OVER THE DEPTH LISTED FOR THE "EMBANKMENT CONDITION" WHEN INSTALLATION IN A "ZERO PROJECTION TRENCH CONDITION."

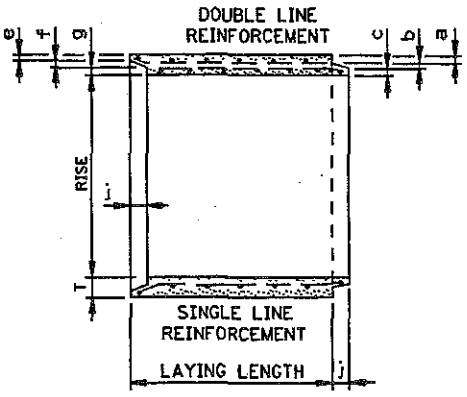

LONGITUDINAL SECTION

APPROVED Oct. 29, 1981
Assistant Division Director
Technical Services

STATE OF MINNESOTA
DEPARTMENT OF TRANSPORTATION

REINFORCED CONCRETE PIPE ARCH

GENERAL NOTES, DIMENSIONS & STIRRUP REQUIREMENTS

SPECIFICATION REFERENCE 2501 2503

REVISED 5-3-99 A.K.J.

STANDARD PLATE NO. 3014J

1 OF 2

TABLE OF REINFORCEMENT REQUIREMENTS																					
NOMINAL SPAN	EQUIVALENT DIAMETER(A)	f'c (ksi)			As, CONTINUOUS BASIC REINFORCEMENT						As, ADDITIONAL REINFORCEMENT										
					INNER CAGE			OUTER CAGE			U - INNER CAGE						V - OUTER CAGE				
		CLASS									DIMEN-SION	TOP			BOTTOM			DIMEN-SION			
IN.	IN.	IIA	IIIA	IVA	IIA	IIIA	IVA	IIA	IIIA	IVA		IIA	IIIA	IVA	IIA	IIIA	IVA		IIA	IIIA	IVA
22	18	4			.42																
28	24	4			.42																
36	30	4			.22			.17			1'2"	.22			.06			2'9"	.17		
44	36	4			.21			.17			1'5"	.21			.08			3'3"	.17		
51	42	4			.26			.19			1'7"	.26			.08			3'6"	.19		
58	48	4			.24			.19			1'10"	.24			.09			4'0"	.19		
65	54	4			.24			.19			2'0"	.24			.09			4'6"	.19		
73	60	5	5	5	.24	.35	.54	.18	.35	.53	2'4"	.24	.11	.15	.11	.35	.54	5'0"	.18	.35	.53
88	72	5	5	5	.23	.43	.63	.21	.42	.61	2'9"	.23	.12	.17	.19	.43	.63	6'0"	.21	.42	.61
102	84	5	5	5	.23	.50	.73	.23	.49	.71	3'3"	.23	.13	.19	.23	.49	.73	7'0"	.23	.48	.71
115	90	5	5	5	.28	.54	.88	.28	.54	.85	3'7"	.19	.16	.21	.28	.54	.88	8'0"	.28	.54	.85
122	96	5	5	5	.30	.54	.90	.30	.54	.89	3'10"	.18	.16	.22	.30	.54	.90	8'6"	.30	.54	.89
138	108	5	5	5	.35	.63	1.03	.36	.62	1.00	4'4"	.12	.18	.28	.35	.62	1.03	9'6"	.36	.61	1.00
154	120	5	5	5	.39	.66	1.06	.38	.66	1.02	4'10"	.08	.18	.27	.39	.66	1.06	10'6"	.38	.65	1.02
169	132	5	5		.50	.90		.49	.90		5'2"	.07	.23		.50	.90		11'0"	.49	.87	

(A) EQUIVALENT DIAMETER = DIAMETER OF CIRCULAR PIPE WITH APPROXIMATELY EQUIVALENT CROSS-SECTION AREA.

f'c (ksi) = MINIMUM COMPRESSIVE STRENGTH OF CONCRETE IN THOUSANDS OF POUNDS PER SQUARE INCH.
As = CIRCUMFERENTIAL STEEL AREA IN SQUARE INCHES PER LINEAL FOOT OF PIPE BARREL IN EACH CONTINUOUS BASIC CAGE AND SUPPLEMENTAL REINFORCEMENT DESIGNATED "U" AND "V".
U = HALF BAR OR FABRIC LENGTH MEASURED ALONG CENTERLINE OF PIPE WALL FROM VERTICAL CENTERLINE OF PIPE.
V = FULL BAR OR FABRIC LENGTH MEASURED ALONG CENTERLINE OF PIPE WALL AND POSITIONED EQUIDISTANT WITH RESPECT TO ENDS OF "U" REINFORCEMENT.

$A = \text{RISE} - R_2$

$B = A + \sqrt{(R_2 - R_3)^2 - C^2}$

$C = \frac{\text{SPAN}}{2} - R_3$

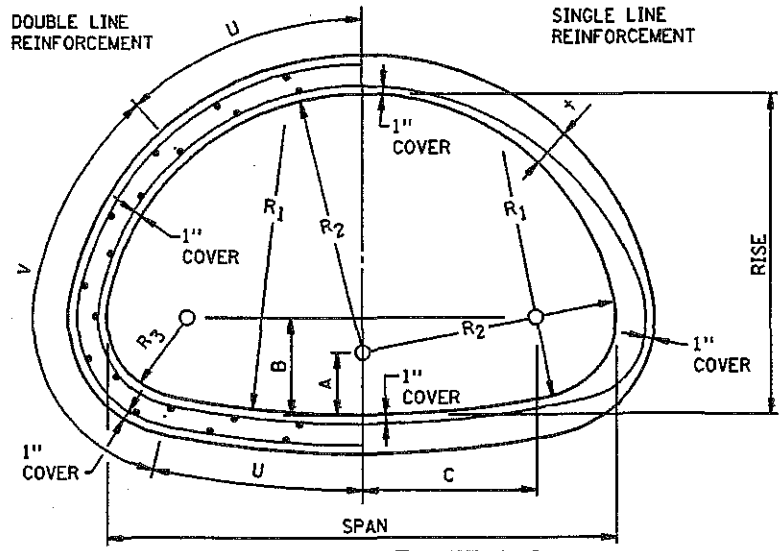

REINFORCEMENT DETAILS

1. STEEL FABRIC SHALL CONFORM TO REQUIREMENTS OF ASTM A 185, fy = 65 ksi.
2. IF REINFORCEMENT BARS ARE USED, INCREASE TABLE VALUES FOR REINFORCEMENT AREAS BY 8%. REINFORCEMENT BARS SHALL CONFORM TO REQUIREMENTS OF ASTM A 615, GRADE 60, fy = 60 ksi.
3. MINIMUM COVER OF REINFORCEMENT SHALL BE 3/4", MAXIMUM SHALL BE 1" + 10% OF t OR 1-1/2" WHICHEVER IS GREATER.
4. WHERE DOUBLE LINE REINFORCEMENT IS INDICATED, ALTERNATE METHODS OF STEEL PLACEMENT WHICH SUPPLY EQUIVALENT REINFORCING STRENGTH AT ALL CRITICAL LOCATIONS MAY BE USED SUBJECT TO WRITTEN APPROVAL OF THE ENGINEER.
5. LONGITUDINAL REINFORCING PARALLEL TO THE AXIS OF THE PIPE SHALL BE A MINIMUM OF 0.06 SQUARE INCHES PER CIRCUMFERENTIAL FOOT ON ALL SIZE SECTIONS. THIS LONGITUDINAL REINFORCING SHALL BE UNIFORMLY SPACED AROUND THE REQUIRED AREAS OF THE CIRCUMFERENCE OF THE PIPE.
6. THE SPACING CENTER TO CENTER OF ADJACENT RINGS OF CIRCUMFERENTIAL REINFORCEMENT IN A CAGE SHALL NOT EXCEED 4 IN. FOR PIPE UP TO AND INCLUDING PIPE HAVING A 4 IN. WALL THICKNESS NOR EXCEEDING THE WALL THICKNESS FOR LARGER PIPE AND SHALL IN NO CASE EXCEED 6 IN.. THE CONTINUITY OF THE CIRCUMFERENTIAL REINFORCING STEEL SHALL NOT BE DESTROYED DURING THE MANUFACTURE OF THE PIPE.

APPROVED Oct. 29, 1981
R H Sullivan
Assistant Division Director
Technical Services

STATE OF MINNESOTA
DEPARTMENT OF TRANSPORTATION
REINFORCED CONCRETE PIPE ARCH
REINFORCEMENT

SPECIFICATION REFERENCE
2501
2503

REVISED
10-12-2000 A.K.J.

STANDARD PLATE NO.
3014J
2 OF 2

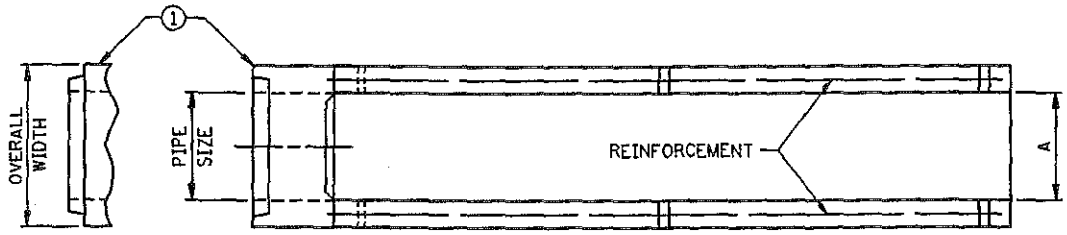

TOP VIEW

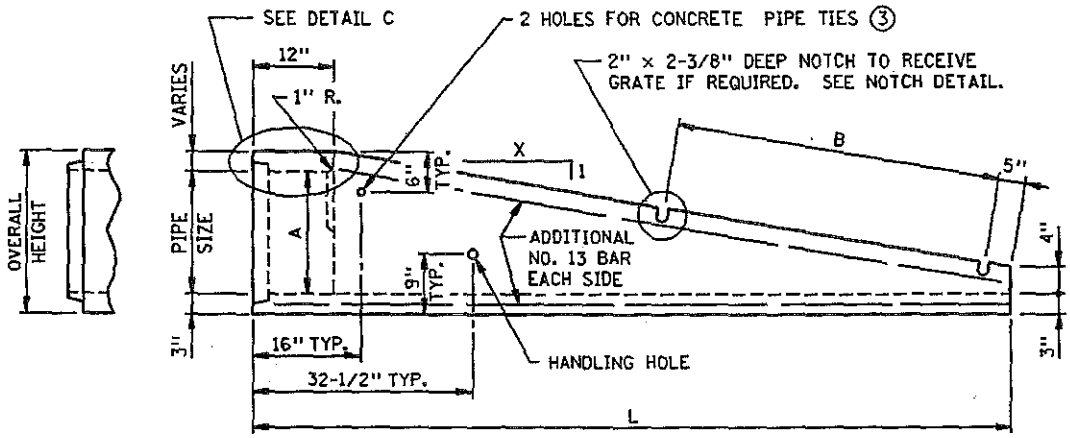

SIDE VIEW

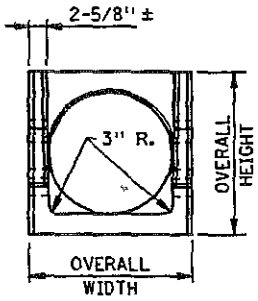

END VIEW

DESIGN OPTION NO. 1

1:6 SLOPES

PIPE SIZE	A INSIDE	B ℄ - ℄	L	OVERALL HEIGHT	OVERALL WIDTH	WEIGHT (LBS.)
15"	15"	4' 0"	9' 4-1/2"	24"	24"	1800
18"	18"	4' 0"	9' 4-1/2"	24"	24"	1700
24"	24"	6' 0"	12' 4" 2	30"	30"	2800

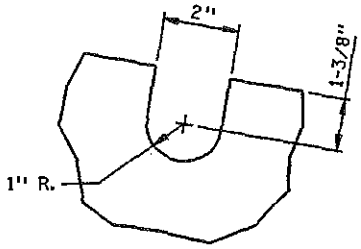

NOTCH DETAIL

1:4 SLOPES

PIPE SIZE	A INSIDE	B ℄ - ℄	L	OVERALL HEIGHT	OVERALL WIDTH	WEIGHT (LBS.)
24"	24"	4' 0"	8' 5"	30"	30"	1900

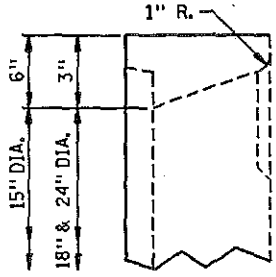

DETAIL C

NOTES:

ALL REBARS ARE IN METRIC DESIGNATIONS

THE DESIGN USED IS THE CONTRACTOR'S OPTION.

REINFORCING STEEL AND CONCRETE PER AASHTO M170.

REINFORCEMENT SHALL CONFORM TO STANDARD REINFORCED CONCRETE PIPE CLASS II, LOCATED AT CENTER OF WALL PLUS ONE (1) NO. 13 BAR, TOP, BOTTOM AND EACH SIDE.

JOINT IN END SECTION PER STANDARD PLATE 3000.

TOP EXPOSED CONCRETE CORNERS SHALL HAVE 3/4" CHAMFER.

TIE BOLTS AS REQUIRED.

1 SEE PLANS FOR TYPE OF END REQUIRED.

2 TWO PIECE CONSTRUCTION PERMISSIBLE.

3 SEE STANDARD PLATE 3145 FOR DETAILS.

APPROVED SEPT. 19, 2000 Delbert W. Gerdes STATE DESIGN ENGINEER	STATE OF MINNESOTA DEPARTMENT OF TRANSPORTATION **PRECAST CONCRETE SAFETY APRON** (DESIGN OPTION NO. 1)	SPECIFICATION REFERENCE 2501	STANDARD PLATE NO. **3022C** 1 OF 3

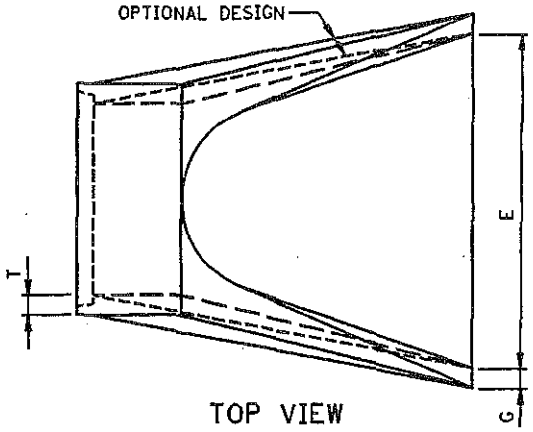

TOP VIEW

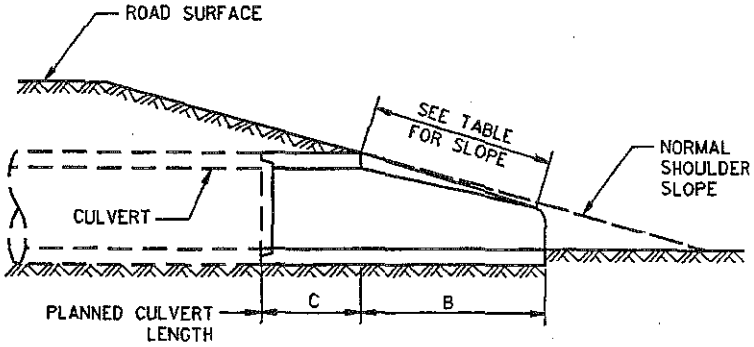

SLOPE DETAIL

NOTE: REINFORCEMENT AND DESIGN OF END SECTION "C" SHALL CONFORM TO STANDARD REINFORCED CONCRETE PIPE CLASS II, "B" WALL.

ROUNDED EDGE PERMITTED ON SLOPED END "B".

HANDLING HOLES SHALL BE PROVIDED AS NECESSARY FOR HANDLING OF APRONS.

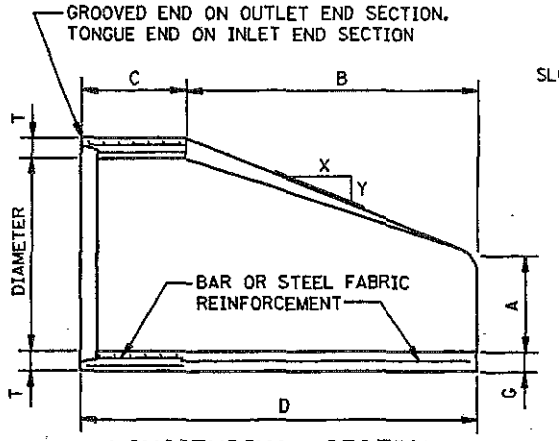

SLOPE = Y TO X

LONGITUDINAL SECTION

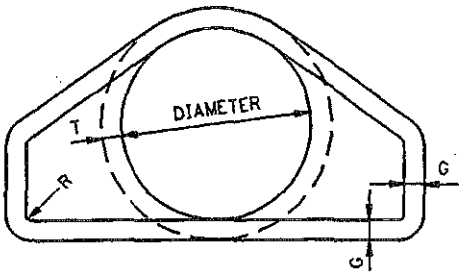

END VIEW

SEE STD PLATE 3000 FOR ADDITIONAL REQUIREMENTS

DIAM.	WEIGHT PER SECTION (LBS.)	APPROX. SLOPE Y TO X	T	A	B	C	D	E	G	R	Ⓢ
12"	530	1 TO 2.4	2"	4"	24"	48-7/8"	72-7/8"	24"	2"	1-1/2"	0.07
15"	740	1 TO 2.4	2-1/4"	6"	27"	46"	73"	30"	2-1/4"	1-1/2"	0.07
18"	990	1 TO 2.3	2-1/2"	9"	27"	46"	73"	36"	2-1/2"	1-1/2"	0.07
21"	1280	1 TO 2.4	2-3/4"	9"	36"	37-1/2"	73-1/2"	42"	2-3/4"	1-1/2"	0.07
24"	1520	1 TO 2.5	3"	9-1/2"	43-1/2"	30"	73-1/2"	48"	3"	1-1/2"	0.07
27"	1930	1 TO 2.5	3-1/4"	10-1/2"	49-1/2"	24"	73-1/2"	54"	3-1/4"	1-1/2"	0.13
30"	2190	1 TO 2.5	3-1/2"	12"	54"	19-3/4"	73-3/4"	60"	3-1/2"	1-1/2"	0.14
36"	4100	1 TO 2.5	4"	15"	63"	34-3/4"	97-3/4"	72"	4"	1-1/2"	0.12
42"	5380	1 TO 2.5	4-1/2"	21"	63"	35"	98"	78"	4-1/2"	1-1/2"	0.15
48"	6550	1 TO 2.5	5"	24"	72"	26"	98"	84"	5"	1-1/2"	0.18
54"	8240	1 TO 2.0	5-1/2"	27"	65"	33-1/4"	98-1/4"	90"	5-1/2"	1-1/2"	0.22
60"	8730	1 TO 1.9	6"	35"	60"	39"	99"	96"	5"	1-1/2"	0.25
66"	10710	1 TO 1.7	6-1/2"	30"	72"	27"	99"	102"	5-1/2"	1-1/2"	0.31
72"	12520	1 TO 1.8	7"	36"	78"	21"	99"	108"	6"	1-1/2"	0.35
78"	14770	1 TO 1.8	7-1/2"	36"	90"	21"	111"	114"	6-1/2"	1-1/2"	0.40
84"	18160	1 TO 1.6	8"	36"	90-1/2"	21"	111-1/2"	120"	6-1/2"	1-1/2"	0.46
90"	20900	1 TO 1.5	8-1/2"	41"	87-1/2"	24"	111-1/2"	132"	6-1/2"	6"	0.51

Ⓢ CONTINUOUS BASIC REINFORCEMENT IN SQ. IN. PER LINEAL FT. FOR SLOPED END "B" (LARGER OF INNER OR OUTER CAGE ON STD. PLATE 3000). FOR WALL THICKNESSES LESS THAN 4", LOCATE REINFORCEMENT AT THE CENTER OF WALL. FOR WALL THICKNESSES 4" AND GREATER, LOCATE REINFORCEMENT WITH A MIN. OF 2" OF COVER MEASURED FROM THE OUTSIDE OF THE WALL.

NOTE: UNLESS SPECIFIED OTHERWISE IN THE PLANS, WHEN AN APRON IS REQUIRED FOR A RUN OF GASKET PIPE (STD. PLATE 3006), THE PRODUCER MAY FURNISH EITHER:

1. AN APRON WITH A STD. PLATE 3006 JOINT, OR
2. AN APRON WITH A STD. PLATE 3000 JOINT AND THE END OF THE STD. PLATE 3006 PIPE CONNECTING TO THE APRON PROVIDED WITH A STD. PLATE 3000 JOINT. THIS JOINT IS TO BE SEALED WITH A PREFORMED MASTIC SEALER.

APPROVED May 8, 1985	STATE OF MINNESOTA DEPARTMENT OF TRANSPORTATION	SPECIFICATION REFERENCE	STANDARD PLATE NO.
R H Sullivan Assistant Division Director Technical Services	FLARED CONCRETE APRON FOR REINFORCED CONCRETE PIPE	2501, 2503 REVISED 10-16-2000 A.K.J.	3100G

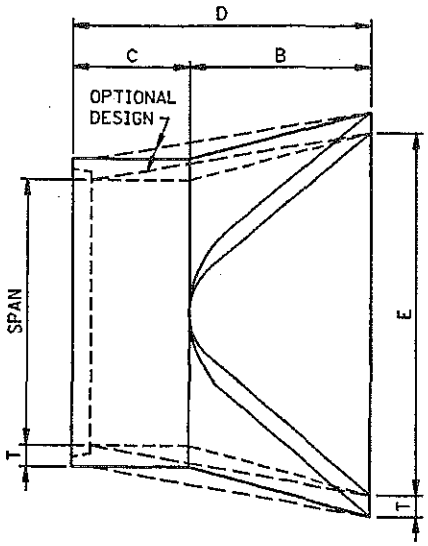

TOP VIEW

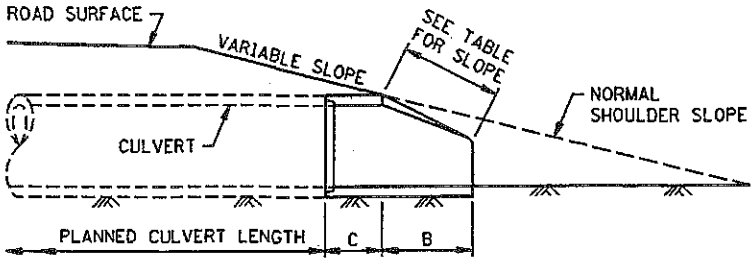

SLOPE DETAIL

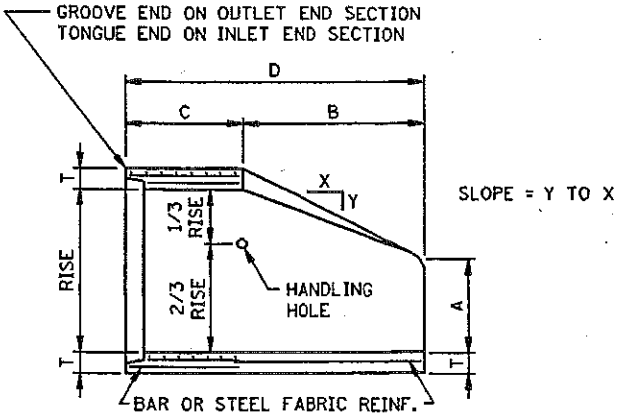

LONGITUDINAL SECTION

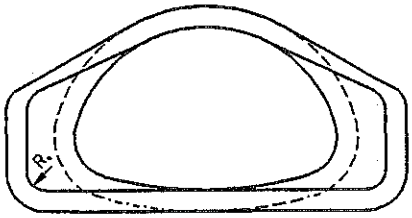

END VIEW

SIZE ①	WEIGHT PER SECTION (APPROX.) (LBS.)	RISE	SPAN	APPROX. SLOPE Y TO X	T	A	B	C	D	E	R	②
18"	1100	13-1/2"	22"	1 TO 3	2-1/2"	7"	27"	45"	72"	36"	2"	0.15
24"	1750	18"	28-1/2"	1 TO 3	3-1/2"	8-1/2"	39"	33"	72"	48"	3"	0.18
30"	3300	22-1/2"	36-1/4"	1 TO 3	4"	9-1/2"	50"	46"	96"	60"	3"	0.22
36"	4350	26-5/8"	43-3/4"	1 TO 3	4-1/2"	11-1/8"	60"	36"	96"	72"	6"	0.21
42"	5250	31-5/16"	51-1/8"	1 TO 3	4-1/2"	15-13/16"	60"	36"	96"	78"	6"	0.26
48"	6400	36"	58-1/2"	1 TO 3	5"	21"	60"	36"	96"	84"	6"	0.24
54"	7850	40"	65"	1 TO 3	5-1/2"	25-1/2"	60"	36"	96"	90"	6"	0.24
60"	9500	45"	73"	1 TO 3	6"	31"	60"	36"	96"	96"	6"	0.24
72"	13550	54"	88"	1 TO 2	7"	31"	60"	39"	99"	120"	6"	0.23
84"	17950	62"	102"	1 TO 2	8"	28-1/2"	83"	19"	102"	144"	6"	0.23

NOTES:

REINFORCEMENT AND DESIGN OF END SECTION "C" SHALL CONFORM TO STANDARD REINFORCED CONCRETE PIPE-ARCH CLASS II-A.

ROUNDED EDGE PERMITTED ON SLOPED END "B".

① SIZE = DIAMETER OF ROUND PIPE WITH SAME PERIPHERY. SEE STANDARD PLATE NO. 3014 FOR PIPE-ARCH SHAPE DIMENSIONS AND APPLICABLE REQUIREMENTS.

② CONTINUOUS BASIC REINFORCEMENT IN SQ. IN. PER LINEAL FT. FOR SLOPED END "B". FOR WALL THICKNESSES LESS THAN 4", LOCATE REINFORCEMENT AT THE CENTER OF WALL. FOR WALL THICKNESSES 4" AND GREATER, LOCATE REINFORCEMENT WITH A MINIMUM OF 2" OF COVER MEASURED FROM THE OUTSIDE OF THE WALL.

APPROVED May 8, 1985 R H Sullivan Assistant Division Director Technical Services	STATE OF MINNESOTA DEPARTMENT OF TRANSPORTATION FLARED CONCRETE APRON FOR REINFORCED CONCRETE PIPE-ARCH	SPECIFICATION REFERENCE 2501 2503 REVISED 10-16-2000 A.K.J.	STANDARD PLATE NO. 3110G

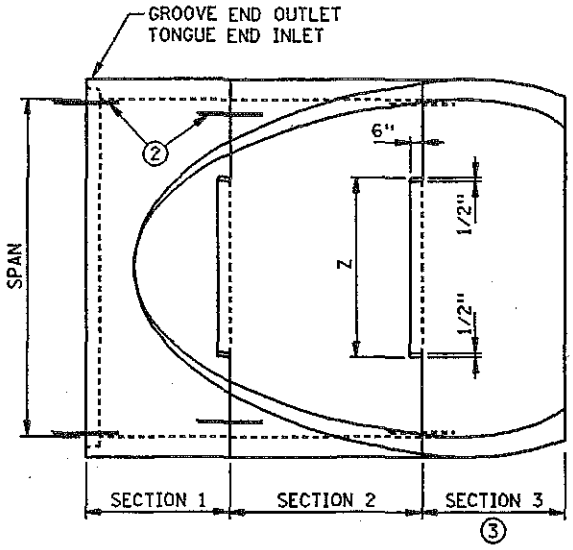

TOP VIEW

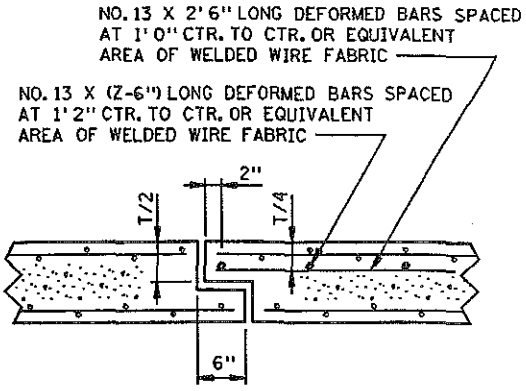

DETAIL A

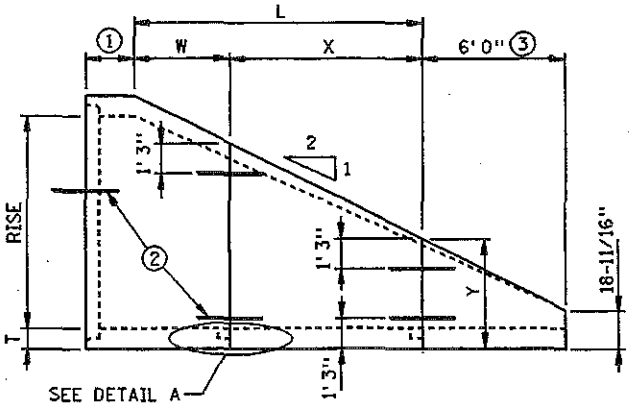

SIDE VIEW

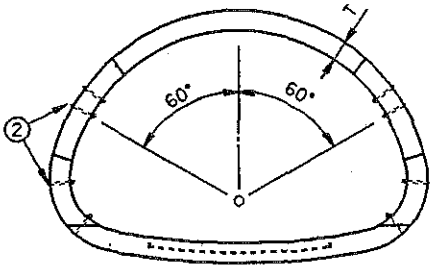

END VIEW

NOTES:

ALL REBARS ARE IN METRIC DESIGNATIONS

1. 2' 0" FOR GROOVE END AND 2' 7" FOR TONGUE END.
2. CULVERT TIES AS SHOWN ON STANDARD PLATE 3145.
3. 132" SIZE IS A 3 PIECE END SECTION.

SEE STANDARD PLATE 3014 FOR THE FOLLOWING:

a. SHAPE, JOINT DIMENSIONS, TOLERANCES AND OTHER APPLICABLE REQUIREMENTS.

b. REINFORCEMENT REQUIREMENTS IN SECTION 1 SHALL CONFORM TO CLASS II-A REINFORCEMENT EXCEPT STIRRUPS NOT REQUIRED. REINFORCEMENT REQUIREMENTS IN SECTION 2 AND 3 SHALL CONFORM TO CLASS II-A CONTINUOUS BASIC REINFORCEMENT ONLY, WITH ADDITIONAL REINFORCEMENT AS SHOWN IN DETAIL A.

TABLE OF REQUIREMENTS

SIZE	RISE	SPAN	T	L	W	X	Y	Z	SECTION 1	SECTION 2	SECTION 3
INCHES									WEIGHT IN POUNDS (APPROX)		
90	72	115-1/2	8-1/2	102-1/4	72	30-1/4	37-7/8	48	19100	3950	
96	78	122-3/8	9	112-1/2	72	40-1/2	39	54	22000	6050	
108	88	138-1/2	10	129-1/2	48	81-1/2	42-3/8	66	23000	15800	
120	96-7/8	154	11	144	48	96	46-7/8	78	27000	24600	
132	106-1/2	168-3/4	10	144	48	96	54-5/8	90	27950	25260	13640

APPROVED Nov. 13, 1986

Director
Materials, Research and Standards

STATE OF MINNESOTA
DEPARTMENT OF TRANSPORTATION

SECTIONAL CONCRETE APRON FOR REINFORCED CONCRETE PIPE-ARCH

SPECIFICATION REFERENCE 2501

REVISED 1-28-2000 A.K.J.

STANDARD PLATE NO. 3114H

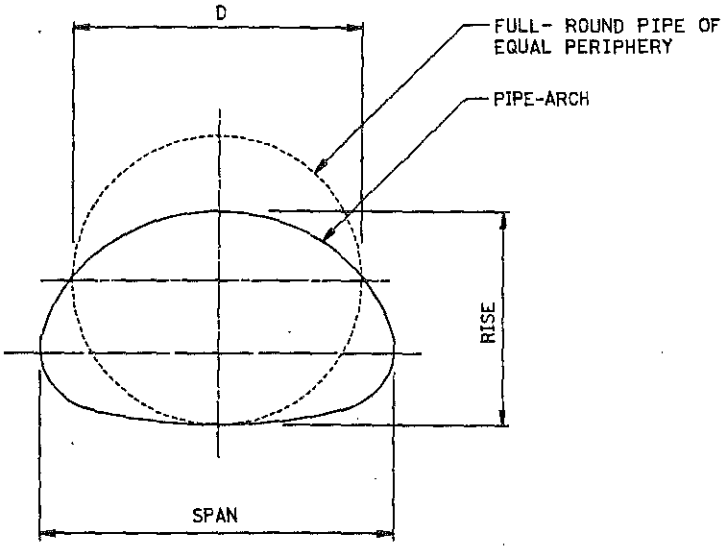

SHEET THICKNESS - GAGE RELATIONSHIP		
	THICKNESS - EQUIVALENT	
GAGE	GALV. STEEL (IN.)	ALUM. ALLOY (IN.)
18	.0516	.048
16	.0635	.060
14	.0785	.075
12	.1084	.105
10	.1382	.135
8	.1681	.164

ROUND PIPE			PIPE-ARCH			
PIPE DIA. (IN.)	END AREA SQ. FT.	GAGE (MIN.)	SPAN (1) (IN.)	RISE (1) (IN.)	END AREA SQ. FT.	GAGE (MIN.)
6	0.2	18				
8	0.4	16				
10	0.6	16				
12	0.8	16				
15	1.2	16	17	13	1.1	16
18	1.8	16	21	15	1.5	16
21	2.4	16	24	18	2.2	16
24	3.1	16	28	20	2.8	16
30	4.9	14	35	24	4.4	14
36	7.1	14	42	29	6.4	14
42	9.6	12	49	33	8.7	12
48	12.6	12	57	38	11.4	12
54	15.9	12	64	43	14.3	12
60	19.6	10	71	47	17.6	10
66	23.8	10	77	52	21.3	8
72	28.3	10	83	57	25.3	8
78	33.2	8				
84	38.5	8				

ROUND PIPE SHALL HAVE THE VERTICAL AXIS ELONGATED 5% MORE THAN THE NORMAL DIAMETER WHEN CALLED FOR IN THE PLANS.

THE AVERAGE INSIDE DIAMETER OF CIRCULAR PIPE AND PIPE TO BE REFORMED INTO PIPE ARCHES SHALL NOT VARY MORE THAN ONE PERCENT OR ONE-HALF INCH, WHICHEVER IS GREATER, FROM THE NOMINAL DIAMETER WHEN MEASURED ON THE INSIDE CREST OF THE CORRUGATIONS.

FOR PIPE-ARCH A TOLERANCE OF PLUS OR MINUS ONE INCH OR TWO PERCENT OF THE EQUIVALENT CIRCULAR DIAMETER, WHICHEVER IS GREATER, WILL BE PERMISSABLE IN SPAN AND RISE. ALL DIMENSIONS ARE MEASURED FROM THE INSIDE CRESTS OF THE CORRUGATIONS.

(1) SEE AASHTO M196M FOR ALUMINUM PIPE-ARCH VALUES.

APPROVED Jan. 29, 1979 Director Construction and Engineering Development	STATE OF MINNESOTA DEPARTMENT OF TRANSPORTATION CORRUGATED METAL PIPE CULVERT STANDARD 2-2/3" x 1/2" CORRUGATION	SPECIFICATION REFERENCE 2501, 2502 2503 REVISED 8-22-96	STANDARD PLATE NO. 3040F

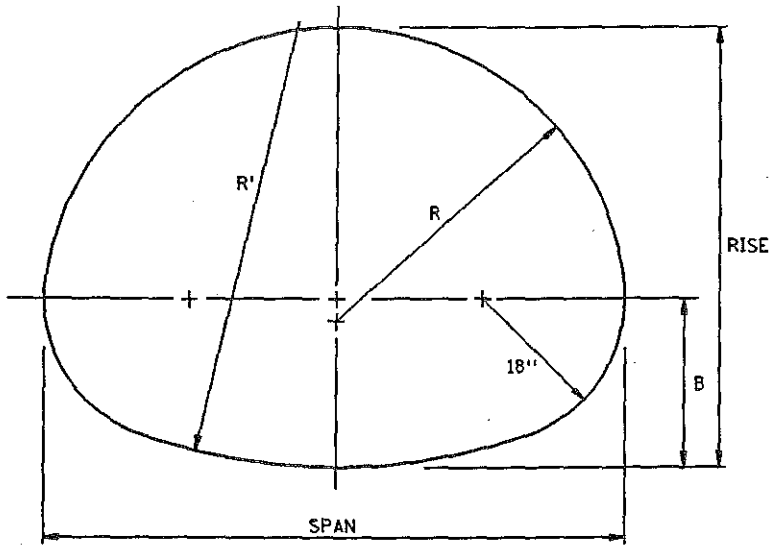

NOMINAL DIMENSIONS				LAYOUT DIMENSIONS				
SPAN	RISE	AREA SQ. FT.	TOTAL PERIPHERY PI INCHES	B INCHES	RISE INCHES	1/2 SPAN INCHES	R INCHES	R' INCHES
6'1"	4'7"	22	66	21.0	55.0	36.5	36.8	76.3
6'4"	4'9"	24	69	20.5	57.1	38.0	38.1	98.6
6'9"	4'11"	26	72	22.0	58.9	40.6	41.0	83.5
7'0"	5'1"	28	75 ①	21.4	61.1	42.1	42.3	104.2
7'3"	5'3"	31	78	20.8	63.2	43.5	43.5	136.2
7'8"	5'5"	33	81	22.4	65.0	46.2	46.5	109.8
7'11"	5'7"	35	84	21.7	67.2	47.6	47.7	137.9
8'2"	5'9"	38	87 ①	20.9	69.4	48.9	48.9	182.9
8'7"	5'11"	40	90	22.7	71.1	51.7	51.9	141.0
8'10"	6'1"	43	93	21.9	73.3	53.0	53.0	178.7
9'4"	6'3"	46	96	23.8	75.1	55.9	56.2	144.6
9'6"	6'5"	49	99	22.9	77.3	57.1	57.3	177.5
9'9"	6'7"	52	102	21.9	79.5	58.3	58.3	227.7
10'3"	6'9"	55	105	24.0	81.2	61.3	61.5	178.3
10'8"	6'11"	58	108	26.1	82.9	64.2	64.9	153.2
10'11"	7'1"	61	111	25.1	85.1	65.5	65.9	180.4
11'5"	7'3"	64	114 ①	27.4	86.9	68.4	69.4	157.9
11'7"	7'5"	67	117	26.3	89.1	69.7	70.2	183.2
11'10"	7'7"	71	120	25.2	91.3	70.9	71.1	216.4
12'4"	7'9"	74	123	27.5	93.0	73.9	74.7	186.5
12'6"	7'11"	78	126	26.4	95.2	75.1	75.5	216.8
12'8"	8'1"	81	129	25.2	97.4	76.2	76.4	257.4
12'10"	8'4"	85	132 ①	24.0	99.7	77.2	77.3	314.7
13'5"	8'5"	89	135	26.4	101.3	80.4	80.7	254.8
13'11"	8'7"	93	138	28.9	103.0	83.6	84.4	220.7
14'1"	8'9"	97	141	27.6	105.2	84.7	85.1	254.1
14'3"	8'11"	101	144	26.3	107.5	85.7	85.9	297.6
14'10"	9'1"	105	147	28.9	109.2	88.9	89.6	254.3
15'4"	9'3"	109	150 ①	31.6	110.8	92.0	93.4	226.8
15'6"	9'5"	113	153	30.2	113.1	93.2	94.0	255.7
15'8"	9'7"	118	156	28.8	115.3	94.2	94.7	291.5
15'10"	9'10"	122	159	27.5	117.6	95.2	95.5	338.1
16'5"	9'11"	126	162	30.1	119.2	98.5	99.2	290.9
16'7"	10'1"	131	165	28.7	121.5	99.5	99.9	332.7

DIMENSIONS ARE TO INSIDE CRESTS AND ARE SUBJECT TO REASONABLE MANUFACTURING TOLERANCES.

① THESE STRUCTURES ARE PREFERRED BECAUSE THEY GIVE GREATEST AREA FOR GIVEN NUMBER OF PLATES AND BOLTS PER RING. EACH STRUCTURE OF LESS SPAN THAN THOSE MARKED PROVIDE CORRESPONDINGLY LESS AREA FOR THE SAME NUMBER OF PLATES AND BOLTS.

APPROVED Oct. 1, 1966
W. A. Ekern
ASSISTANT COMMISSIONER
ENGINEERING STANDARDS

STATE OF MINNESOTA
DEPARTMENT OF TRANSPORTATION
DESIGN DATA
STRUCTURAL PLATE STRUCTURES
(18" CORNER RADIUS)

SPECIFICATION REFERENCE
2415

STANDARD PLATE NO.
3050B

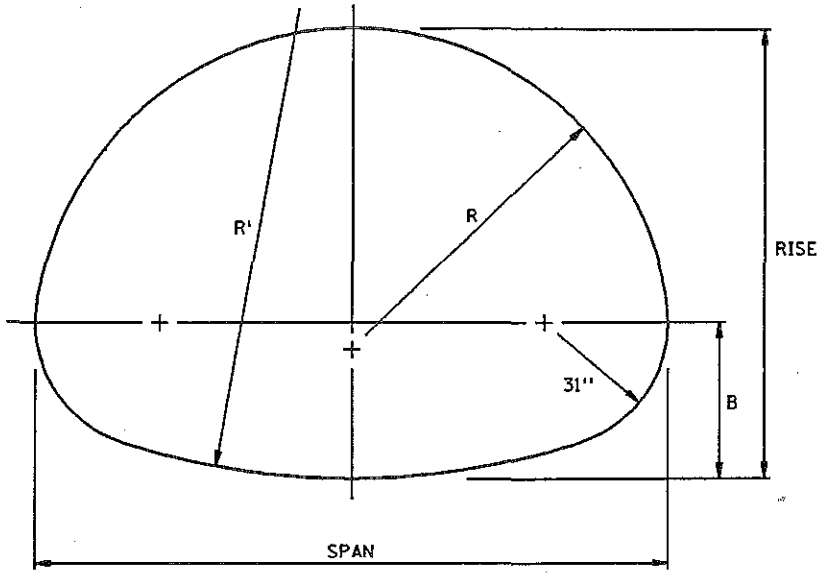

NOMINAL DIMENSIONS				LAYOUT DIMENSIONS				
SPAN	RISE	AREA SQ. FT.	TOTAL PERIPHERY PI INCHES	B INCHES	RISE INCHES	1/2 SPAN INCHES	R INCHES	R' INCHES
13'3"	9'4"	98	138	38.6	112.3	79.7	80.1	192.6
13'6"	9'6"	102	141	37.8	114.4	81.1	81.3	220.0
14'0"	9'8"	106	144	39.6	116.2	83.8	84.4	197.9
14'2"	9'10"	110	147	38.9	118.4	85.3	85.6	222.6
14'5"	10'0"	115	150	38.0	120.5	86.4	86.6	256.6
14'11"	10'2"	119	153	39.9	122.3	89.3	89.8	227.7
15'4"	10'4"	124	156	41.9	124.1	92.1	93.1	208.5
15'7"	10'6"	129	159	41.0	126.3	93.5	94.1	232.1
15'10"	10'8"	133	162	40.1	128.5	94.8	95.2	260.6
16'3"	10'10"	138	165	42.2	130.2	97.7	98.5	236.0
16'6"	11'0"	143	168	41.2	132.4	99.0	99.5	263.2
17'0"	11'2"	148	171	43.4	134.2	101.8	102.9	241.0
17'2"	11'4"	153	174	42.4	136.3	103.1	103.8	266.8
17'5"	11'6"	158	177	41.4	138.5	104.4	104.8	297.9
17'11"	11'8"	163	180	43.6	140.3	107.3	108.2	270.6
18'1"	11'10"	168	183	42.5	142.4	108.6	109.1	299.7
18'7"	12'0"	174	186	44.8	144.2	111.5	112.6	274.5
18'9"	12'2"	179	189	43.7	146.4	112.7	113.5	302.3
19'3"	12'4"	185	192	46.0	148.1	115.7	117.0	278.6
19'6"	12'6"	190	195	44.9	150.3	117.0	117.9	305.1
19'8"	12'8"	196	198	43.8	152.5	118.2	118.8	336.5
19'11"	12'10"	202	201	42.6	154.7	119.3	119.7	374.3
20'5"	13'0"	208	204	45.0	156.4	122.4	123.2	338.1
20'7"	13'2"	214	207	43.8	158.6	123.5	124.0	373.5

DIMENSIONS ARE TO INSIDE CRESTS AND ARE SUBJECT TO REASONABLE MANUFACTURING TOLERANCES.

APPROVED Oct. 1, 1966 W. A. Ekern ASSISTANT COMMISSIONER ENGINEERING STANDARDS	STATE OF MINNESOTA DEPARTMENT OF TRANSPORTATION DESIGN DATA STRUCTURAL PLATE STRUCTURES (31" CORNER RADIUS)	SPECIFICATION REFERENCE 2415	STANDARD PLATE NO. 3051B

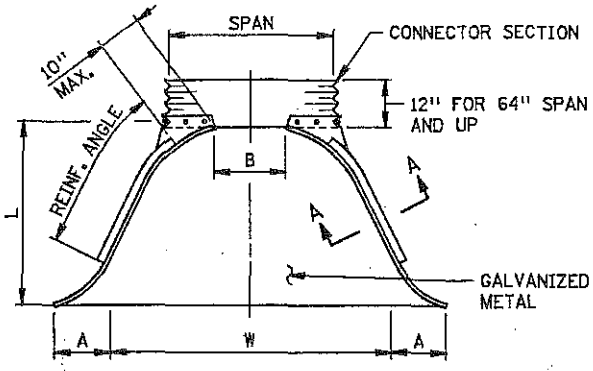

TOP VIEW

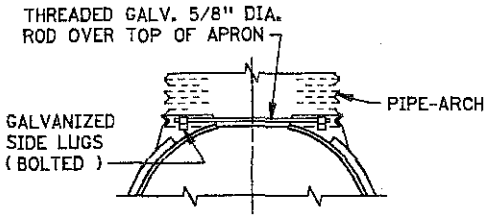

FOR 17" X 13" THRU 57" X 38" ONLY

ROD CONNECTION ①

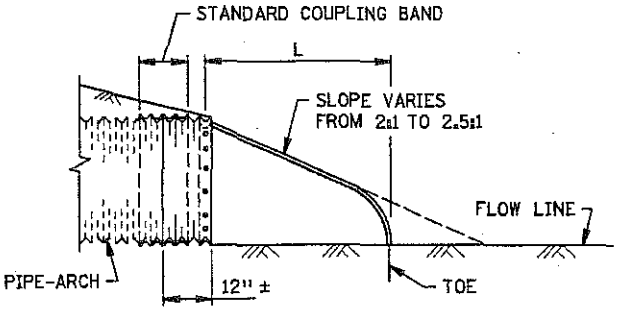

CROSS SECTION

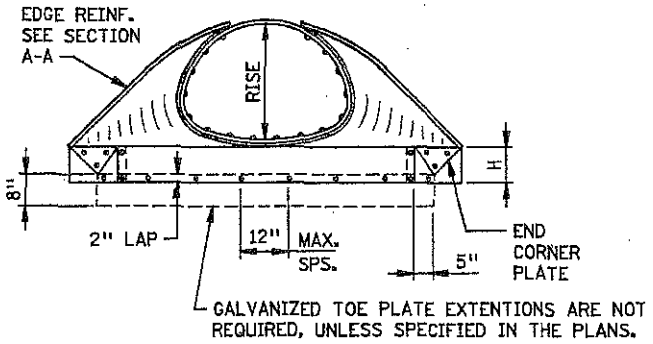

ELEVATION

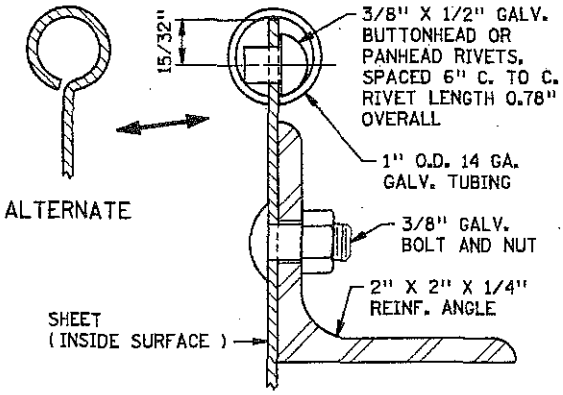

SECTION A-A

	EQUIVALENT DIA. (IN.)	PIPE-ARCH SIZE (IN.) ④ SPAN	PIPE-ARCH SIZE (IN.) ④ RISE	GAUGE	DIMENSIONS A 1" ± (IN.)	B MAX. (IN.)	H 1" ± (IN.)	L 1-1/2" ± (IN.)	W 2" ± (IN.)	REMARKS
	15	17	13	16	7	9	6	19	30	1 PIECE
	18	21	15	16	7	10	6	23	36	"
	21	24	18	16	8	12	6	28	42	"
	24	28	20	16	9	14	6	32	48	"
	30	35	24	14	10	16	6	39	60	"
	36	42	29	14	12	18	8	46	75	"
	42	49	33	12	13	21	9	53	85	2 PIECES, ℄ SPLICE
②	48	57	38	12	18	26	12	63	90	" "
②	54	64	43	12	18	30	12	70	102	" "
③	60	71	47	12	18	33	12	77	114	3 PIECES, 2 SPLICES
③	66	77	52	12	18	36	12	77	126	" "
③	72	83	57	12	18	39	12	77	138	" "

NOTES:

FOR OTHER APPROVED CONNECTIONS, SEE STANDARD PLATE 3124.

THE TOP EDGE OF ALL APRONS SHALL HAVE TUBING REINFORCING (SEE SECTION A-A). THE TUBING SHALL BE SUPPLEMENTED WITH GALVANIZED ANGLE FOR 77" X 52" AND 83" X 57" SIZES. ALTERNATE ROLLED TOP EDGE DESIGNS APPROVED BY THE MN/DOT MATERIALS SECTION MAY BE USED.

① FOR 18" THRU 29" SPAN PIPE-ARCHES, A FLAT STRAP CONNECTOR MAY BE USED IN PLACE OF THE ROD CONNECTION. STRAP CONNECTOR SHALL BE 1" WIDE, 12 GA. STRAP WITH STANDARD 6" LONG X 1/2" DIA. BAND BOLT AND NUT.

② A 3 PIECE APRON WITH 2 SPLICES MAY BE USED IN LIEU OF A 2 PIECE APRON. THE 3 PIECE BODIES SHALL BE MADE OF 3 EQUAL SECTIONS OF 12 GA. MATERIAL.

③ 3 PIECE BODIES SHALL HAVE 12 GA. SIDES AND 10 GA. CENTER PANELS. WIDTH OF CENTER PANEL SHALL EXCEED 20% OF PIPES PERIPHERY. MULTIPLE PANEL BODIES SHALL HAVE 2" MIN. LAP SEAMS WHICH ARE TO BE JOINED BY 3/8" DIA. RIVETS OR BOLTS (GALVANIZED) SPACED AT 6" MAX. C. TO C. NUTS TO BE TIGHTENED TO 25 LB. ± TORQUE. ANGLE REINFORCEMENT SHALL BE PLACED UNDER THE CENTER PANEL SEAMS ON 77" X 52" AND 83" X 57" SIZES.

④ PIPE-ARCH DIMENSIONS ARE FOR 2-2/3" X 1/2" CORRUGATIONS.

APPROVED Nov. 13, 1986 R.H. Sullivan Director Materials, Research and Standards	STATE OF MINNESOTA DEPARTMENT OF TRANSPORTATION METAL APRON FOR C.M. PIPE-ARCH CULVERT FLARED	SPECIFICATION REFERENCE 2501	STANDARD PLATE NO. 3122K

APPROVED March 31, 1993

STATE DESIGN ENGINEER

STATE OF MINNESOTA
DEPARTMENT OF TRANSPORTATION

SAFETY APRON

SPECIFICATION REFERENCE 2501

STANDARD PLATE NO. 3128F 2 OF 2

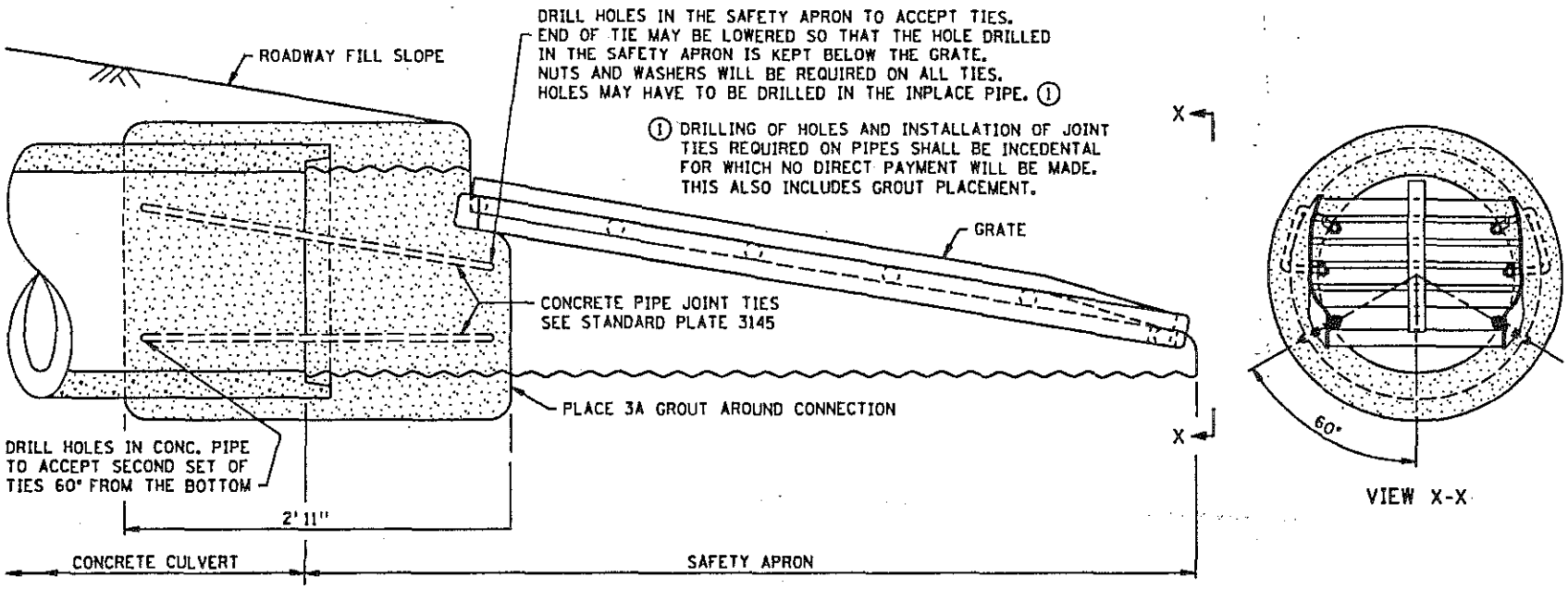

SIDE VIEW

PIPE JOINT TIE CONNECTION TO CONCRETE PIPE

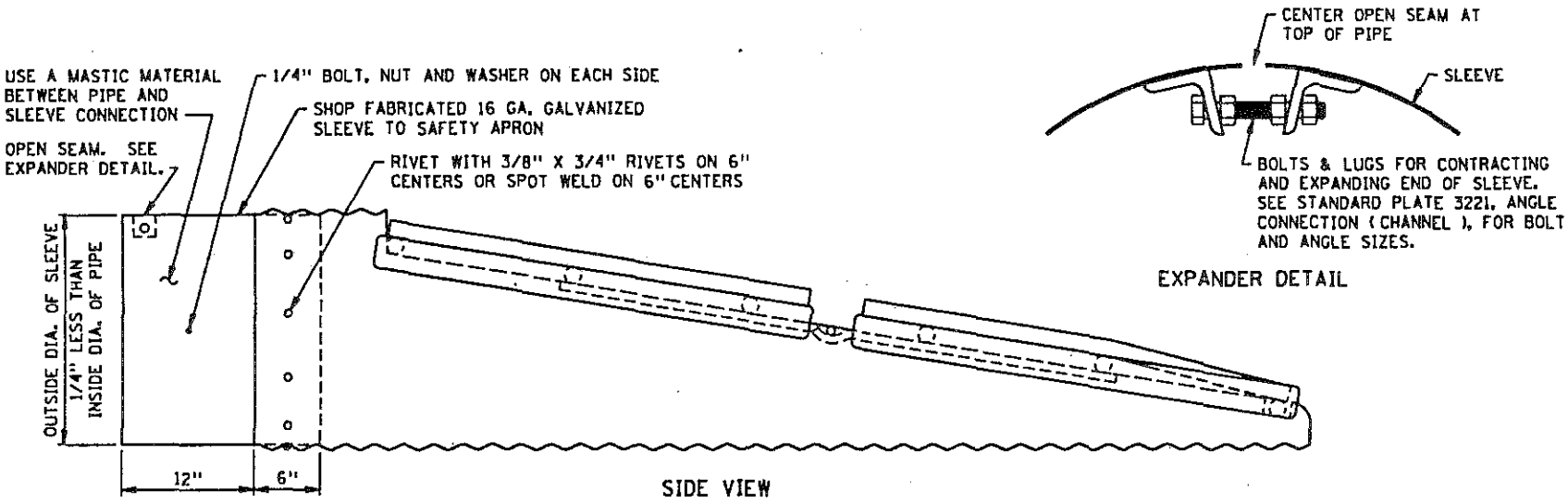

EXPANDER DETAIL

SIDE VIEW

METAL SLEEVE CONNECTION TO POLYETHYLENE PIPE

APPROVED March 31, 1993

STATE DESIGN ENGINEER

STATE OF MINNESOTA
DEPARTMENT OF TRANSPORTATION

SAFETY APRON

FOR USE ON APPROPRIATE CULVERT ENDS WITHIN REQUIRED CLEAR ZONE

SPECIFICATION REFERENCE 2501

STANDARD PLATE NO. 3128F 1 OF 2

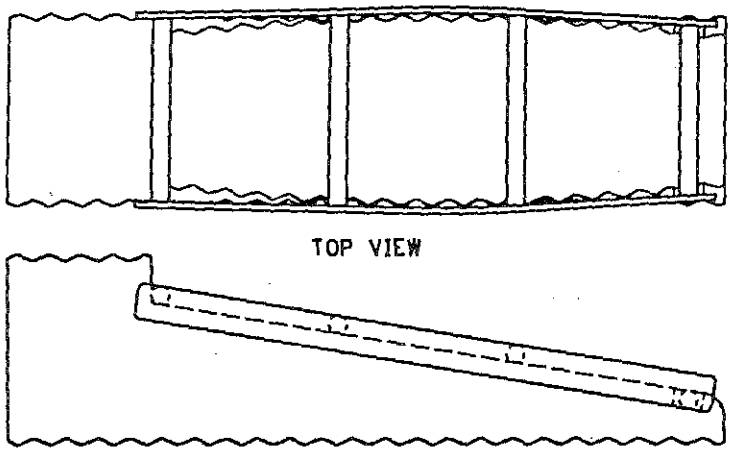

TYPICAL SINGLE PIECE GRATE

PIPE SIZE AND TYPE	GAGE	NUMBER OF LONGITUDINAL BARS	NUMBER OF CROSS BARS	"L" LENGTH OF GRATE	NO. OF PIECES TO GRATE ①	TOTAL WEIGHT OF PIECES (APPROX.)	"M" LENGTH OF PIPE
15" ROUND	12	0	4	4'1"	1	55 LBS.	5'0"
18" ROUND	12	0	5	5'7"	1	75 LBS.	6'9"
21" ROUND	12	1	6	7'1"	2	145 LBS.	7'6"
24" ROUND	12	1	6	8'7"	2	165 LBS.	9'3"
27" ROUND	10	1	7	10'2"	3	205 LBS.	11'0"
30" ROUND	10	1	8	11'8"	4	245 LBS.	12'9"
36" ROUND	10	1	10	14'8"	5	325 LBS.	15'3"
21" CMP-A	12	1	4	4'1"	1	85 LBS.	5'0"
24" CMP-A	12	1	5	5'7"	2	120 LBS.	6'9"
28" CMP-A	12	1	6	6'7"	2	155 LBS.	7'3"
35" CMP-A	10	1	6	8'7"	3	195 LBS.	9'3"

① EACH SECTION SHOULD BE OF EQUAL LENGTH FOR SPLIT GRATE WHEN POSSIBLE

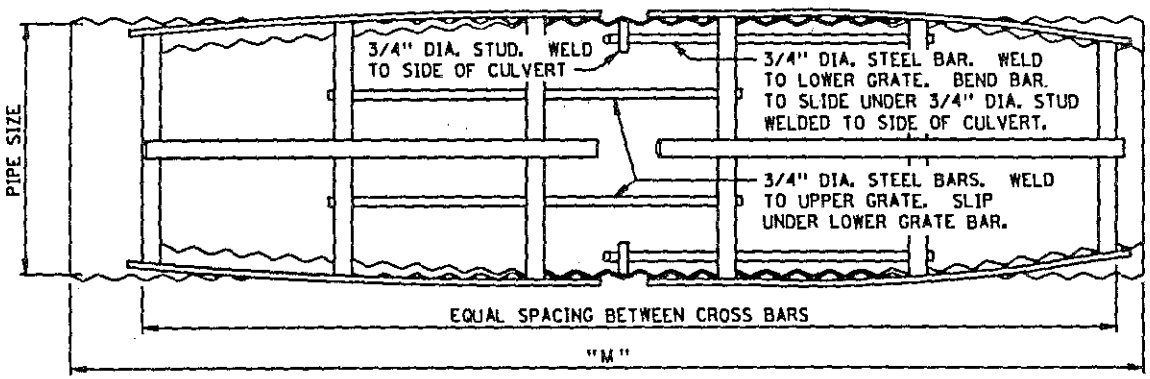

TOP VIEW

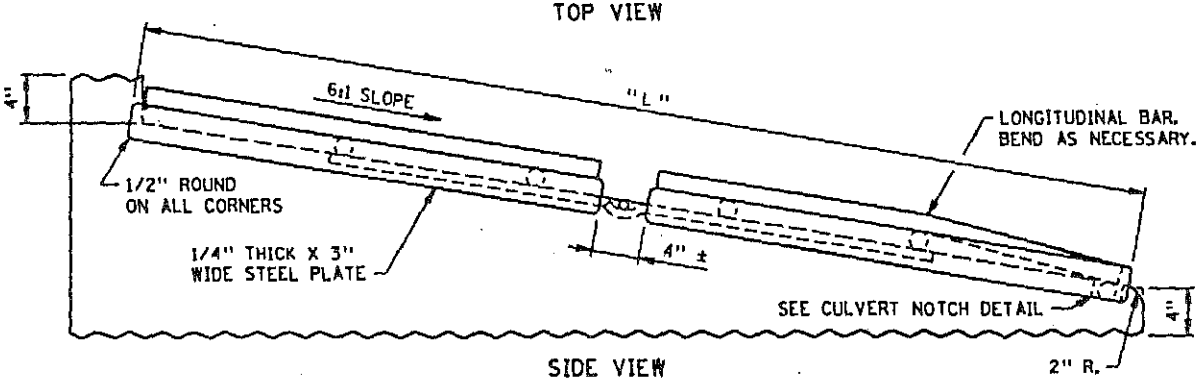

SIDE VIEW

TYPICAL SPLIT GRATE

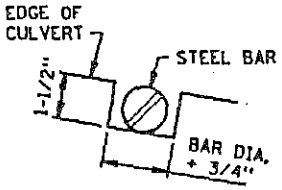

CULVERT NOTCH DETAIL

NOTES:

GALVANIZE PER SPEC. 3394 AFTER FABRICATION.

SAFETY APRON SHALL BE CONSTRUCTED OF STRUCTURAL STEEL PER SPEC. 3306.

ALL CROSS BARS SHALL BE WELDED ALL AROUND TO STEEL PLATE FRAME.

THE APRON SHALL BE FASTENED TO THE CULVERT WITH A STANDARD COUPLING BAND. SEE STANDARD PLATE 3221. SEE SHEET 2 OF 2 FOR CONNECTION TO CONCRETE CULVERTS.

ALL CROSS BARS AND CENTER LONGITUDINAL BARS SHALL BE 1-1/2" DIA. BARS AT HINGES SHALL BE 3/4" DIA. AS INDICATED.

PIPE SIZE AND TYPE	GAGE	NUMBER OF LONGITUDINAL BARS	NUMBER OF CROSS BARS	"L" LENGTH OF GRATE	NO. OF PIECES TO GRATE ①	TOTAL WEIGHT OF PIECES (APPROX.)	"M" LENGTH OF PIPE
18" ROUND	12	0	5	5'7"	1	75 LBS.	6'9"
21" ROUND	12	1	6	7'1"	2	145 LBS.	7'6"
24" ROUND	12	1	6	8'7"	2	165 LBS.	9'3"
30" ROUND	10	1	8	11'8"	4	245 LBS.	12'9"
36" ROUND	10	1	10	14'8"	5	325 LBS.	15'3"
② 21" CMP-A	12	1	4	4'1"	1	85 LBS.	5'0"
② 24" CMP-A	12	1	5	5'7"	2	120 LBS.	6'9"
② 28" CMP-A	12	1	6	6'7"	2	155 LBS.	7'3"
② 35" CMP-A	10	1	6	8'7"	3	195 LBS.	9'3"

① EACH SECTION SHOULD BE OF EQUAL LENGTH FOR SPLIT GRATE WHEN POSSIBLE.
② SPAN DIMENSIONS.

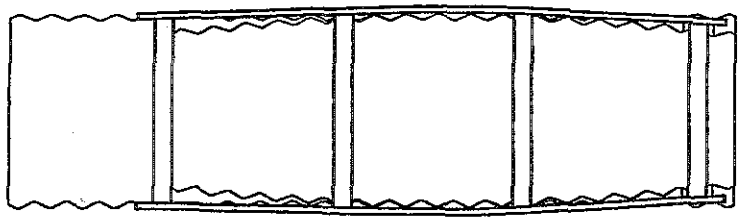

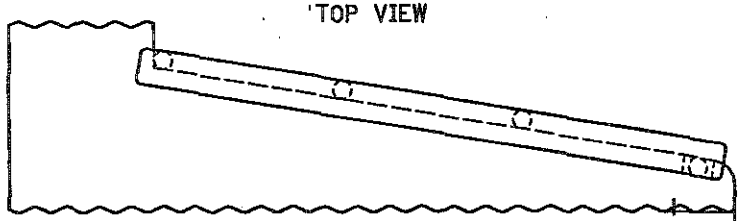

TYPICAL SINGLE PIECE GRATE

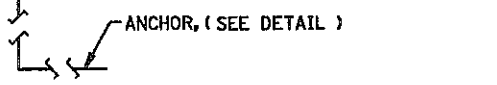

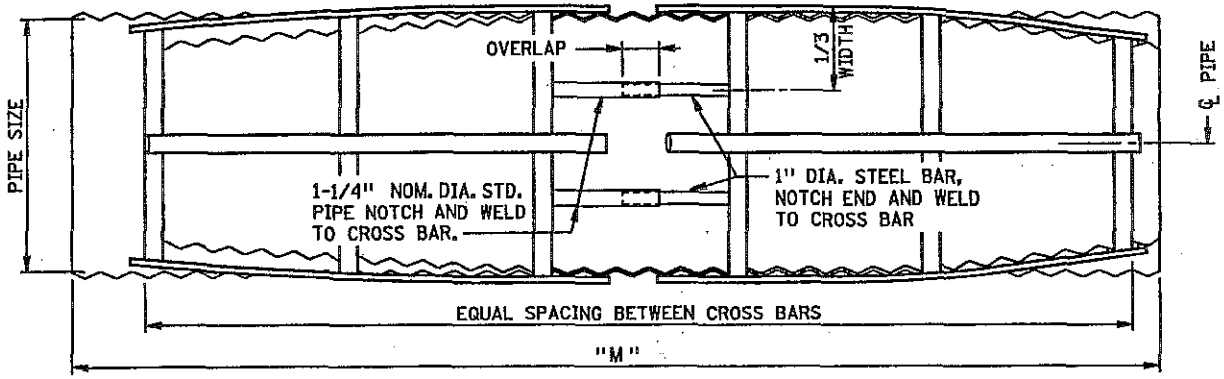

TOP VIEW

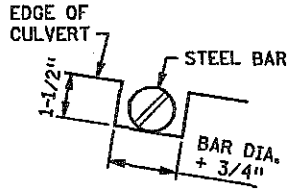

CULVERT NOTCH DETAIL

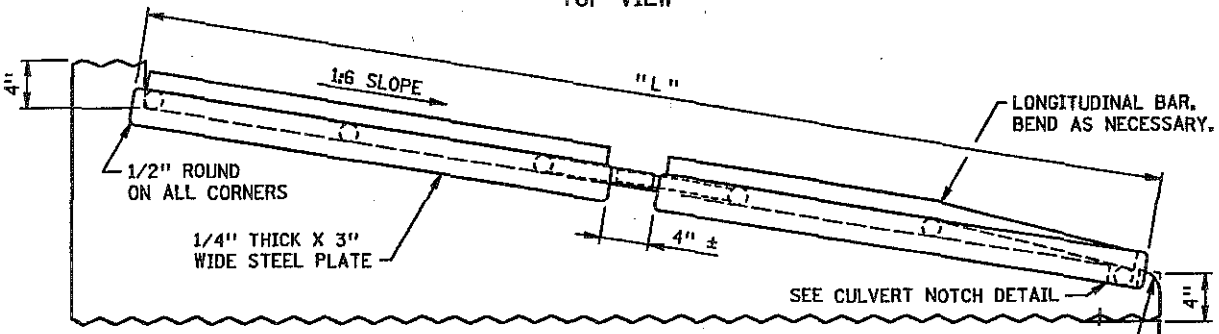

SIDE VIEW

TYPICAL SPLIT GRATE
(MITERED PIPE SHOWN)

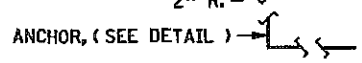

NOTES:

GALVANIZE PER SPEC. 3394 AFTER FABRICATION.

SAFETY APRON SHALL BE CONSTRUCTED OF STRUCTURAL STEEL PER SPEC. 3306.

ALL CROSS BARS SHALL BE WELDED ALL AROUND TO STEEL PLATE FRAME.

THE APRON SHALL BE FASTENED TO THE CULVERT WITH A STANDARD COUPLING BAND. SEE STANDARD PLATE 3221. SEE SHEET 2 OF 2 FOR CONNECTION TO CONCRETE CULVERTS.

ALL CROSS BARS AND CENTER LONGITUDINAL BARS SHALL BE 1-1/2" DIAMETER.

NO GRATE OF ANY KIND IS ALLOWED ON AN OUTLET WITHOUT A GRATE BEING PLACED ON THE INLET ALSO.

APPROVED NOVEMBER 1, 2000
STATE DESIGN ENGINEER

STATE OF MINNESOTA
DEPARTMENT OF TRANSPORTATION

METAL SAFETY APRON & GRATE

FOR USE ON APPROPRIATE CULVERT ENDS WITHIN REQUIRED CLEAR ZONE

SPECIFICATION REFERENCE 2501

REVISED 3-12-2003

STANDARD PLATE NO. 3128H

1 OF 2

APPROVED NOVEMBER 1, 2000

STATE DESIGN ENGINEER

STATE OF MINNESOTA
DEPARTMENT OF TRANSPORTATION

METAL SAFETY APRON & GRATE
(METAL APRON CONNECTIONS)

SPECIFICATION REFERENCE: 2501

STANDARD PLATE NO. 3128H
2 OF 2

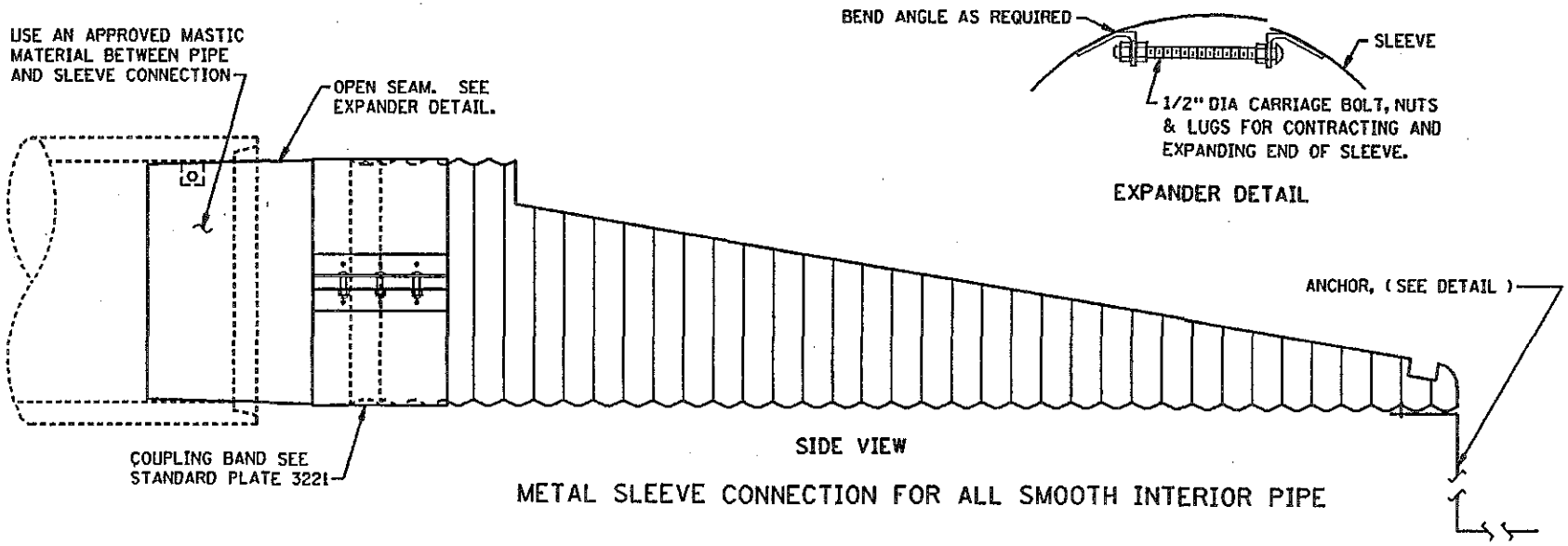

METAL SLEEVE CONNECTION FOR ALL SMOOTH INTERIOR PIPE

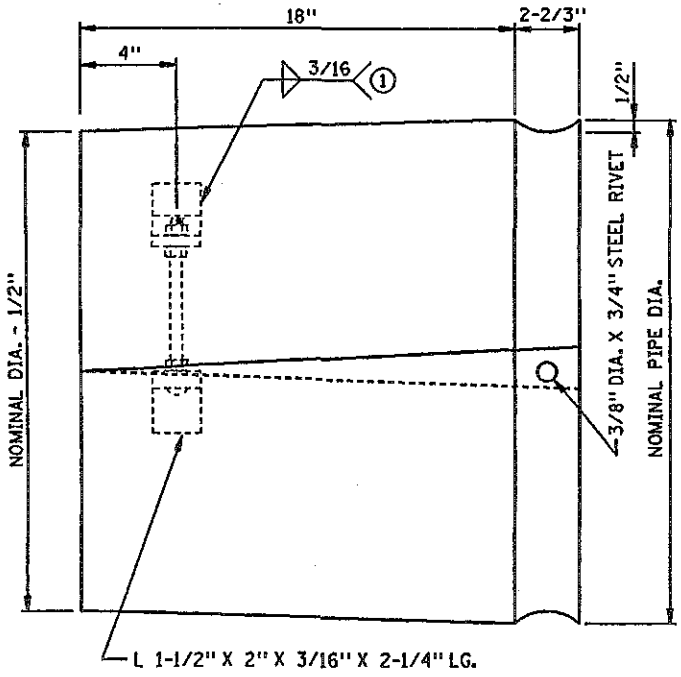

PLAN VIEW

SLEEVE ②

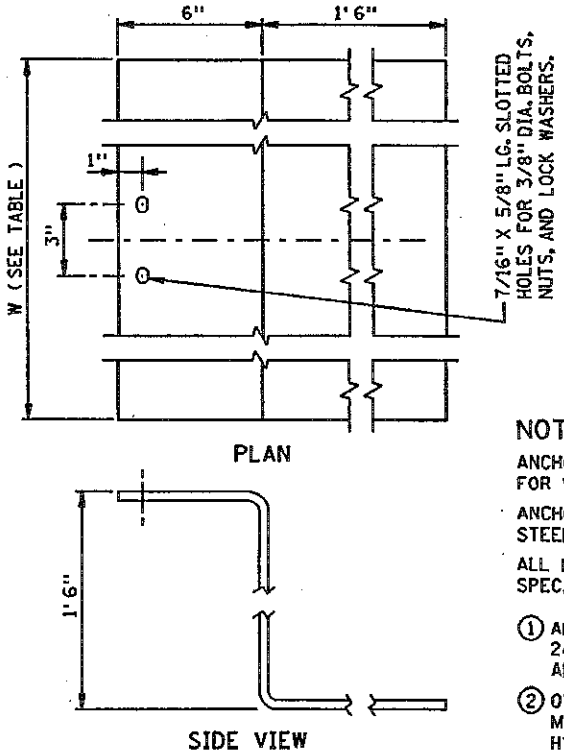

ANCHOR DETAIL

PIPE DIA.	ANCHOR WIDTH - W
15" - 24"	30"
30" - 36"	42"

NOTES:

ANCHORS SHALL BE CONSIDERED INCIDENTAL, FOR WHICH NO DIRECT PAYMENT WILL BE MADE.

ANCHOR SHALL BE MINIMUM 14 GAGE GALVANIZED STEEL PER SPEC. 3392.

ALL HARDWARE SHALL BE GALVANIZED AS PER SPEC. 3392.

① AN APPROVED PROTECTIVE COATING SPEC. 2471.3L1 SHALL BE APPLIED TO ALL WELDED AREAS.

② OTHER METAL SLEEVE CONNECTION OPTIONS MAY BE USED. AS APPROVED BY THE HYDRAULICS SECTION.

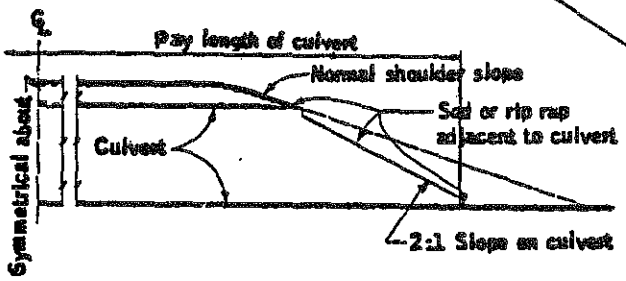

PART LONGITUDINAL SECTION ON ℄

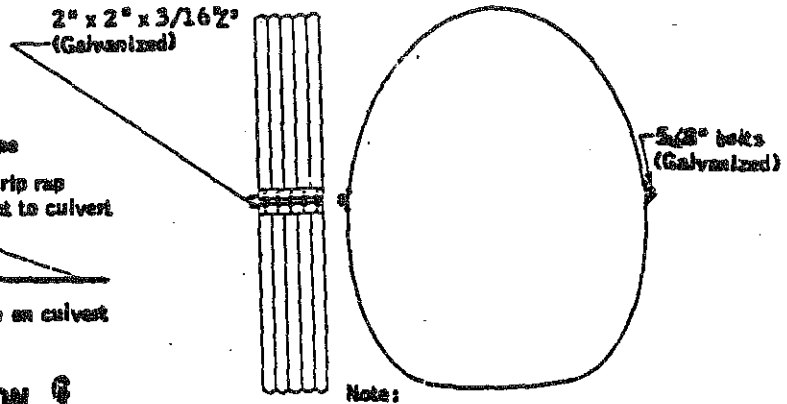

Note:
Rivet lower half of coupling to one end of culvert and upper half of coupling to the other end.

DETAIL OF COUPLING

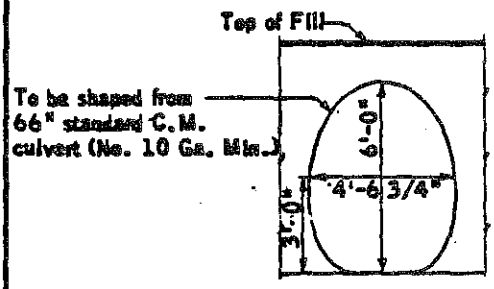

CROSS SECTION
OF CATTLE PASS

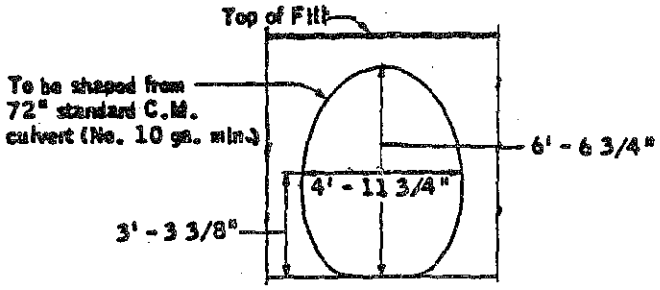

CROSS SECTION
OF HORSE PASS

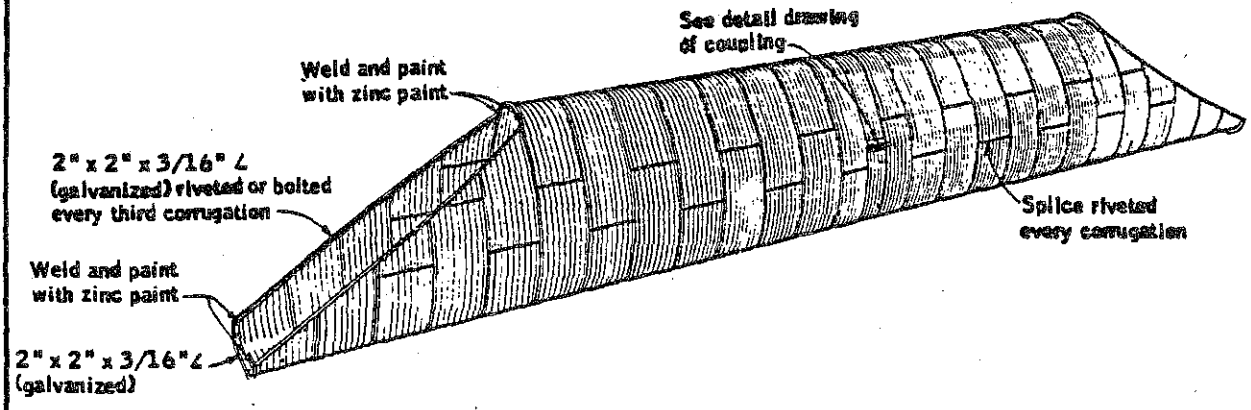

PERSPECTIVE VIEW

Spec. Ref. : 2501 and 3226

APPROVED Oct. 1, 1966 W. A. Ekern ASSISTANT COMMISSIONER ENGINEERING STANDARDS	STATE OF MINNESOTA DEPARTMENT OF HIGHWAYS **DEFORMED METAL CULVERT** **CATTLE AND HORSE PASS**		STANDARD PLATE NO. **3045B**

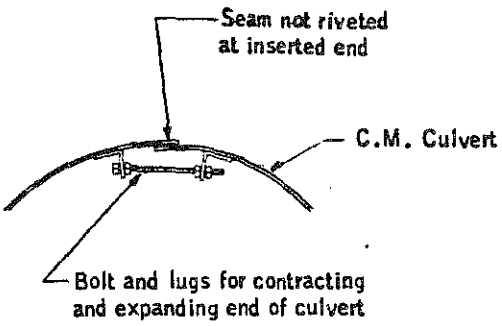

EXPANDER DETAIL

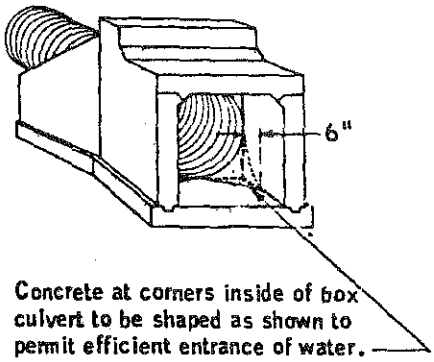

INSIDE VIEW

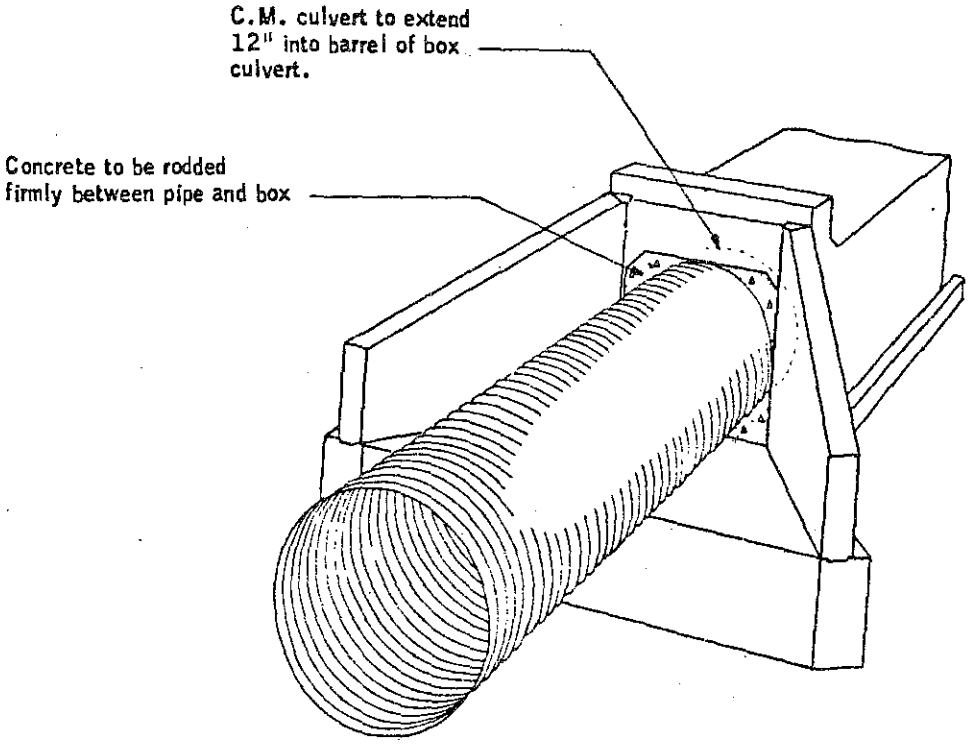

PERSPECTIVE

Spec. Ref. 2501

APPROVED Oct. 1, 1966 W. A. Ekern ASSISTANT COMMISSIONER ENGINEERING STANDARDS	STATE OF MINNESOTA DEPARTMENT OF HIGHWAYS **C.M. EXTENSION FOR BOX CULVERT**		STANDARD PLATE NO. **3066A**