2. GENERAL DESIGN AND LOCATION FEATURES

The design of a bridge typically takes place in two major phases of work: preliminary design and final design. During preliminary design, the structure type, the foundation type, the aesthetics, and the primary geometry for the bridge are determined. During final design, specific details for all of the elements of the bridge are developed and presented in the plan set. These details include material descriptions, quantities, and geometric information. Final plan sets are typically assembled in an order that roughly follows the order of construction: from the ground up.

This section of the manual contains a large amount of information useful for the preparation and assembly of plans for a project. To facilitate the production of plans and standardize the content of bridge plan sets, special provisions, B-Details, standard plans, standard plan notes, and standard pay items have been prepared by the Bridge Office. Appendices to Section 2 identify the material available.

As the name of the section implies, content for this section is general in nature. Guidance for the design of specific structural elements (e.g. decks, retaining walls, etc.) is provided elsewhere in the manual.

2.1 Geometrics

2.1.1 Bridge Geometrics

Definitions

For discussion of bridge geometrics in this section, roadways are classified as Mainline Highways, Ramps, Local Roads, and Local Streets. Each of these four groups is further classified under either Urban or Rural Design.

The following definitions apply:

- Mainline Highways – Roadways that carry through traffic lanes for freeways, expressways, and primary and secondary highways.
- Local Roads – Rural roads off the trunk highway system.
- Local Streets – Urban roads off the state trunk highway system.
- Ramps – Segments of roadway connecting two or more legs at an interchange.
- Urban Design – Roadways with curbs on the right and/or left sides.
- Rural Design – Roadways without curbs.
- Median Width – The distance between the edges of opposing through traffic lanes.
- Auxiliary Lane – A lane adjoining a through traffic lane for a purpose supplementary to through traffic movement such as truck climbing, weaving, speed change or turning.

General Criteria

The width of the bridge deck and the typical section at the bridge undercrossing are determined by the classification and geometrics of the approaching roadway. The geometrics of the approaching roadway are to be carried over and under the bridge to the maximum extent practicable.

Rural design is considered the desirable design and will be used in all rural areas and in urban areas where sufficient right of way is available or can be obtained. Urban design geometrics (curbed roadways) are slightly more restrictive and are therefore used at locations where extensive right-of-way cost or other unusual conditions are controlling factors.

The discussion of geometric details included in this section describes bridge deck geometrics separately from bridge undercrossing geometrics. For side clearances at certain undercrossing situations, both a "desirable" and a minimum section are shown. Incorporation of the "desirable" section at undercrossings is mandatory unless approved by the Preliminary Bridge Plans Engineer.

Application of Standards

The geometrics shown apply specifically to new work. However, use of these geometrics is also highly desirable when upgrading or widening existing facilities and should be incorporated in these situations. Bridge deck geometrics on the local road system must also comply with *State-Aid for Local Transportation Operations Rules*, Chapter 8820.

Responsibility

The Preliminary Bridge Plans Engineer will be responsible for assuring that the geometric standards in this section are followed. Where a deviation from the standard is necessary, a written description of the deviation shall be prepared by the Preliminary Bridge Plans Engineer and submitted to the State Bridge Engineer when submitting the Preliminary Bridge Plan for acceptance.

2.1.2 Bridge Deck Requirements

Bridge Width Criteria

Roadway cross sections that approach bridges will normally provide a clear zone recovery area beside the travel lane for the benefit of out-of-control vehicles. It is not economical or practical to carry these full clear zone widths across bridges. Standard widths for bridge shoulders have been set to balance costs and safety. Since the railing is located within the clear zone it is considered a hazard and guardrail protection is required in the approach area.

Functions of the shoulder include:

- Recovery area to regain control of a vehicle.
- Emergency parking area for stalled vehicles and escape route for stranded motorists.
- Passageway for bicycles and occasional pedestrians.
- Passageway for emergency vehicles.
- Parking area for bridge maintenance and inspection vehicle (snooper).
- Temporary traffic lane during deck repairs or overlay construction.
- Area for deck drainage and snow storage.
- Accommodates passing of wide oversize loads, especially farm machinery.
- On two-lane highways, the shoulders provide an escape area to avoid a head-on collision with an oncoming passing vehicle.

The following shoulder widths for both rural and urban design apply to trunk highway bridges. In addition, these standards apply to bridges on local roads at a trunk highway freeway interchange. For local roads and streets, the bridge roadway widths are given in the *State Aid Manual*, Section 5-892.210 and the *State Aid Operations Rules*, Chapter 8820. Exceptionally long bridges or bridges with a high cost per square foot should be evaluated on an individual basis and modifications to these standards are allowed based on judgment. In addition to these values, the bridge roadway width shall meet the additional requirements for sight distance and sharp curvature as specified in Part 4 below.

1) Rural Design
   a) Two-Lane Rural Design
      Shoulder widths are given in the table on Figure 2.1.4.1 and are dependent on the functional classification of the roadway and traffic volumes.
   b) Four-Lane Rural Design
      i) Right Shoulder 12'-0"
      ii) Left Shoulder 6'-0"
   c) Six- or Eight-Lane Rural Divided Highway
      i) Right Shoulder 12'-0"
      ii) Left Shoulder 12'-0"
         The full inside shoulder allows disabled vehicles in the left lane to stop on the inside shoulder rather than try to cross two or three lanes of traffic to get to the outside shoulder.
   d) Mainline Rural Bridge with Auxiliary Lane
      i) Right Shoulder 8'-0"
   e) Mainline Rural Bridge with Entrance or Exit Ramps
      i) Right Shoulder 8'-0"
   f) Rural Bridges with Turn Lanes

i) Right Turn Lane
(1) Right shoulder 6'-0"
ii) Left Turn Lanes
(1) Adjacent to a barrier railing: 4'-0" minimum shoulder, 6'-0" desirable.

g) Rural Ramp Bridges (one 16'-0" lane, one-way)
i) Right Shoulder 6'-0"
ii) Left Shoulder 4'-0"
On ramp bridges the dimension from edge of lane to gutter is reduced to prevent the appearance of a two-lane bridge on a one-lane ramp. The roadway width is 26'-0", which allows traffic to pass a stalled vehicle. With a 16'-0" lane the outside 2'-0" could, in effect, be considered as part of the shoulder for a 12'-0" lane.

2) Urban Design (Approach Curbs)
For urban designs the bridge gutter lines shall be aligned with the curb line on the approaching roadway with the following exceptions:
a) On four-lane divided highways where there are no median curbs, the left shoulder shall be 6'-0".
b) On six- and eight-lane divided highways where there are no median curbs, the left shoulder shall be 10'-0" minimum.
c) On one-lane urban ramps (16'-0" approach roadway), both right and left shoulders shall be 4'-0" (provides a 24'-0" roadway).
d) Where an auxiliary lane, ramp, or taper extends onto a mainline bridge, the right shoulder shall be 6'-0".
e) The minimum distance to a barrier railing is 6'-0" desired, 4'-0" minimum.

Urban shoulder widths will vary according to functional class, traffic volumes, scope of work, and quality of pavement surface. Typical values are shown in the *Road Design Manual*, Tables 4-4.01A, 4-4.01B, and 4-4.01C. Provide a 2'-0" reaction distance to a raised island type median or sidewalk curb where vehicle speeds are 40 mph and under. For design speeds 45 mph and higher, provide a 4'-0" reaction distance.

3) Bus Shoulders
Where the right shoulder has been designated as a bus shoulder a 12'-0" width shall be provided across bridges. See Road Design Manual 4-4.03 and Table 4-4.03A.

4) Additional Width Criteria
a) Where a ramp (loop) bridge is on a radius of 190'-0" or less, or when the volume of trucks is 10% or greater, the effective traffic

lane is increased from 16'-0" to 18'-0" in width to accommodate truck turning movements. Increase the width of the ramp bridge accordingly.

b) For curved bridges longer than 100 feet, check the horizontal stopping sight distance and increase the inside shoulder width up to a maximum of 10'-0". See *Road Design Manual*, Chapter 3 for calculation of this distance. The 2001 edition of the AASHTO book, *A Policy on Geometric Design of Highways and Streets*, changed the height of object from 6" (muffler) to 2'-0" (tail light). Table 2.1.2.1 gives widths required for a continuously curving bridge for various design speeds and curvature, and applies only where the line of sight is blocked by the railing.

Table 2.1.2.1
Shoulder Width Requirements for Curved Bridges

DESIGN SPEED	SHOULDER WIDTH FOR DEGREE OF CURVATURE LISTED		
	6 FT.	8 FT.	10 FT.
70 mph	to 0° 45′	> 0° 45′ to 1°	> 1°
60 mph	to 1° 15′	> 1° 15′ to 2°	> 2°
50 mph	to 2° 30′	> 2° 30′ to 3° 15′	> 3° 15′
40 mph	to 5° 30′	> 5° 30′ to 7°	> 7°

c) For bridges on tapers, the taper should begin or end at a pier or an abutment, or continue across the entire length of the bridge. Extra width to eliminate or simplify a taper or curvature is permissible where justified by simplified design and construction.

Cross Slopes on Bridges

1) The cross slope on bridge traffic lanes is the same as the approaching roadway lanes, normally 0.02 ft./ft. The shoulder cross slope on the bridge may continue at 0.02 ft./ft. or, if better drainage is desired, may be 0.005 ft./ft. greater than the adjacent lane, with a maximum cross slope of 0.04 ft./ft. When the bridge deck is superelevated, the shoulders shall have the same slopes as the adjacent bridge traffic lanes.

   Keep superelevation transitions off bridges. In instances where they are unavoidable, it is preferable for ease of deck pouring to maintain a straight line across the deck at all locations (allows a straight screed between paving rails placed at both sides of the deck.)

2) Ramp cross slopes shall be uniform between the bridge curbs with a slope of 0.02 ft./ft. to the right unless superelevated.

Bridge Median

On divided highways with a separate bridge for each roadway, the openings between bridges must be a minimum of 8'-0" wide if access for bridge inspection vehicles (snoopers) is required.

Longitudinal joints along the median of bridges should be used only for bridge roadways wider than about 100 feet or for other special cases. By eliminating this joint on bridges with medians, simpler detailing and simpler construction can be used.

Bridge Sidewalks and Bikeways

Bridge sidewalks of 6'-0" minimum widths are to be provided where justified by pedestrian traffic. When bicycle traffic is expected, the width should be 8'-0" minimum and 10'-0" desirable. Where an off road bikeway is to be carried across a bridge, the full width of the approach bikeway may be continued across the bridge up to a width of 12'-0", which is considered the practical maximum width for a bikeway on a bridge. When the shoulders of the bikeway cannot be carried over bridges, provide lead-in guardrail.

The curb height for sidewalks adjacent to the roadway is 8". When the design speed on the street is over 40 mph, a concrete barrier is required between the roadway and the sidewalk (or bikeway). In addition, a pedestrian (or bikeway) railing is required on the outside.

When a barrier is provided between the traffic lanes and the sidewalk, use the bridge slab for the walkway (i.e., do not require an additional pour for sidewalk). Advise the road plans designer to provide for any necessary sidewalk ramping off the bridge.

Sidewalks and bikeways shall have a minimum cross slope of 0.01 ft./ft.

Protective Rails at Bridge Approaches

The ends of bridge railings must be protected from being impacted (except on low speed roads such as city streets). For design speeds over 40 mph, a crash tested guardrail transition (normally plate beam guardrail) is required.

Refer to *State-Aid Operation Rules*, Chapter 8820 for guardrail requirements on local bridges.

2.1.3 Bridge Undercrossing Geometrics

General Criteria for Lateral Clearance

Bridge undercrossing geometrics must rationalize safety requirements with costs and physical controls such as span length and permissible depth of structure. The following guidelines apply in establishing these geometrics:

1) Safety

   Piers, abutments, side slopes and back slopes steeper than 1:3, and guardrails can all be hazards to an out of control vehicle. It is desirable at all bridge undercrossings to provide a clear zone recovery area beside the roadway that is free from these hazards. This clear zone is given in the *Road Design Manual*, Section 4-6.0 and is a function of the roadway curvature, design speed, ADT, and ground slope. For the area under bridges a practical maximum clear zone of 30 feet may be used as permitted in the *2002 AASHTO Roadside Design Guide*, Table 3.1 based on consistent use and satisfactory performance. Eliminate side piers from the roadside area wherever possible. The "desirable" bridge undercrossing will satisfy the above safety criteria.

   For those locations where it is totally impractical to provide a full clear zone recovery area at an undercrossing (as at some railroad underpasses and in certain urban situations), lesser side clearances are permitted. Where the full recovery areas must be infringed upon, the greatest side clearances that circumstances will permit shall be used. A side clearance of 20 feet is not as desirable as 30 feet but is still better than the absolute minimum clearance. Minimum lateral clearances are specified under the section for Lateral Clearance for Mainline Highways.

   Where drainage must be carried along the roadway passing under a bridge, either a culvert must be provided at the approach fill or the ditch section must be carried through at the toe of the bridge approach fill. The use of a culvert will often permit more desirable bridge geometrics, but the culvert openings can also introduce a roadside hazard. A determination regarding drainage (need for culverts, size of a culvert, and assessment of possible hazard) will be a controlling factor in deciding geometrics of the bridge for the site.

2) Economics

   Prestressed concrete beam spans (in length up to about 145 feet) are normally the most economical type of construction for grade separations. In addition, there will usually be greater economy in constructing grade separations using two long spans rather than

constructing four shorter spans, provided that a concrete superstructure can be used.

3) Aesthetics
The use of longer spans will necessitate a deeper superstructure and higher approach fills. Consideration must be given to the effect of the depth of structure on the overall appearance and design of the undercrossing.

For rough calculations during preliminary planning, the depth of highway bridge superstructures can be assumed to be about 1/20 of the length of the longest span. (Depth of superstructure refers to the dimension from top of slab to bottom of beam.) Contact the Preliminary Bridge Plans Engineer for the exact dimensions to be used in final planning. Contact the Preliminary Bridge Plans Engineer for depth of structure on railroad bridges.

Lateral Clearance for Mainline Highways

1) The desirable lateral clearance right and left from the edge of through traffic lanes to any hazard (as described above) is the full clear zone. 30'-0" may be used as a practical maximum. Side piers shall be eliminated entirely wherever feasible.

2) The details for rural design provide for selection of geometrics that carry the ditch section through the bridge (Alternate B), and also geometrics that have a filled ditch (Alternate A). (See Figures 2.1.4.1 and 2.1.4.3.) Alternate A permits a shorter bridge superstructure and thereby improves the economics and the chance of eliminating side piers and is used almost exclusively. However, Alternate A can only be used where ditch culverts will be deleted or used without introducing a significant safety hazard.

3) Where the roadway ditch section (rural design) is modified at the bridge (Alternate A), a longitudinal transition from the ditch section to the 0.04 ft./ft. side slope under the bridge must be provided. Use a maximum longitudinal slope of 1:20.

4) For an auxiliary lane, the clear zone must be maintained from both the through traffic lane and the auxiliary lane.

5) For ramps and tapers adjacent to the mainline highway, the clear zone must be maintained from both the through lane and the taper. A reduced design speed, usually 50 mph, is assumed for the taper.

6) Minimum Lateral Clearances

The following paragraphs list those instances where less than desirable geometrics can be considered and describes the minimum values that will apply. Where geometrics less than desirable are to be used, approval of the State Bridge Engineer and State Design Engineer must be obtained. For plate beam guardrail with standard 6'-3" post spacing, a minimum of 3'-0" is required between the face of the guardrail and the face of the pier or abutment to allow room for the guardrail to deflect. (See *Road Design Manual* 10-7.02.01.)

a) Through Traffic Lanes – Right Side

For urban design, the lateral clearance on the right measured from the edge of the through lane shall be not less than 10'-0" width for an approaching shoulder plus the minimum width of approaching berm. This will result in minimum dimension of 16'-0" from the edge of a lane to face of substructure unit.

For auxiliary lanes, tapers, and ramps along urban mainline highways, the minimum lateral clearance from the edge of a lane to face of pier or abutment on the right is 10'-0". This provides room to construct the standard 6'-0" ramp shoulder plus providing an additional 4'-0" of space for guardrail. However, in no event shall the distance from the edge of a through lane to the face of a pier be less than 16'-0".

For rural design, the lateral clearance on the right may be reduced from the full clear zone distance at railroad overpasses. At these locations the minimum clearance on the right shall be as described above for urban designs.

b) Through Traffic Lanes – Left Side of Divided Highways

i) Urban Highways with Continuous Median Barriers

The minimum clearances at continuous median barriers are based on the use of a concrete barrier between the roadways. (See Std. Plate 8322.)

For urban design, four-lane divided roadways, the minimum clearance on the left will be based on providing an 8'-0" wide shoulder from the edge of a through lane to median gutter line away from the bridge. The 8'-0" wide shoulder may be infringed upon as necessary to carry the median barrier around a bridge pier. At normal grade separations, using 3'-0" thick piers, the 8'-0" shoulder may be reduced to 6'-2" at the pier. (See Figure 2.1.4.12.)

For urban design, six- and eight-lane divided roadways, the minimum clearance on the left is based on providing a 10'-0" minimum wide shoulder from the edge of a through lane to median gutter line outside of the bridge. As described above for four-lane divided roadways, this dimension may be infringed upon as necessary to carry the median barrier around a bridge pier. This may result in reducing the shoulder width from 10'-0" to 8'-2" at normal grade separations (assuming 3'-0" thick pier). (See Figure 2.1.4.12.)

ii) Urban Highways without Continuous Median Barriers

The warrant requiring a median barrier is based on the median width and the ADT. (See *Road Design Manual*.) At those locations where the clear distance to a center pier is less than the clear zone distance from the edge of a lane, but where a continuous barrier will not be provided, a plate beam barrier will normally be required at the pier.

The pier with plate beam guardrail protection can be used only in medians that are 18'-6" or wider for four-lane divided highways, and 22'-6" or wider for six- and eight-lane divided highways. (Dimensions are from the edge of lane to edge of lane.) Piers on high speed roadways should not be placed in medians narrower than 18'-6" (four- lane) or 22'-6" (six- or eight-lane).

The face of the plate beam will be located 2'-0" from the face of the pier. At normal grade separations (with ± 3'-0" pier thickness) this will result in a dimension of 5'-6" from the edge of lane to face of the guardrail on four-lane divided roads, and a dimension of 7'-6" from the edge of lane to face of the guardrail on six- and eight-lane divided roads.

iii) Rail Overpasses Using Rural Design

For rural design, the median width (edge of lane to edge of lane) for roadways passing under railroads may be considered for a reduction. Where a reduced width is used, the distance from the edge of lane to face of pier should be not less than 20'-0".

Lateral Clearances for Ramps

When rural or urban ramps pass under a bridge independently, piers should be eliminated and the approaching typical section should be carried through the bridge. On extremely skewed bridges where piers

are necessary, place the face of pier 2'-0" further from roadway than toe of back slope. (See Figure 2.1.4.8.)

Lateral Clearances for Local Roads

Lateral clearances for local roads are dependent on ADT. The applicable values are shown on Figures 2.1.4.9 and 2.1.4.10.

Lateral Clearance for Local Streets

Locate the face of piers or abutments on or beyond the property line. This will provide for the ultimate development of the section by local authorities. A minimum distance of 6'-0" from the face of a curb to the face of pier or abutment must be provided.

Lateral Clearance for Railroads

Lateral clearances at railroads are to be determined as follows:

1) The statutory clearances diagram shown on Figure 2.1.4.11 represents the absolute minimums that must be adhered to. For design, a minimum horizontal clearance of 9'-0" to a pier or abutment is to be used (8'-6" legal).

2) Side piers are placed 4'-0" in from the back slope control point (18'-0" clear to the centerline of track for a cut section without a maintenance road). This puts the face of pier 2'-0" outside the bottom of a 3'-0" deep ditch with a 1:2 slope and allows the railroad to periodically clean the ditch with track-mounted equipment.

3) Mn/DOT and FHWA have agreed to the horizontal clearances shown in Figure 2.1.4.11 (25'-0" minimum clearance to pier, 30'-6" to "back slope control point") for mainline BNRR tracks at sites meeting the following conditions:
   a) When the standard will not increase the cost of the structure by more than $50,000.
   b) When sufficient vertical clearance exists between the tracks and inplace or proposed roadway profile to accommodate the structure depth necessary for the longer spans typically required by the standard.

   If these conditions cannot be met, submit a letter to the Railroad Administration Section along with the signed Preliminary Bridge Plan stating the reasons the standard cannot be met including an estimate of the increased cost if applicable.

4) Back slopes shall be 1:2 and pass through the "back slope control point" shown on Figure 2.1.4.11 for the applicable case. The

dimension to the "back slope control point" indicates the maximum extent of federal participation in the construction and must not be exceeded.

5) The Preliminary Bridge Plans Engineer will contact the Railroad Administration Section of the Office of Railroads and Waterways to determine the need for provisions for a maintenance road for track maintenance equipment. If the Railroad Administration Section determines that the need is justified, the dimension to the "back slope control point" can be increased up to 8'-0".

Waterway Sections Under Bridge Crossing Streams

The Waterway Analysis (hydraulics report) gives information on the required stream cross section under the bridge including waterway area and low member elevation. Potential flood damage, both upstream and downstream, and permitting agencies' requirements must be considered.

For Bridges on the local System, refer to the State Aid Bridge Web Site for direction: http://www.dot.state.mn.us/bridge/StateAidBridge/index.html. Go to the Handbook and then to the Hydraulic Guidance section.

Vertical Clearance for Underpasses

Table 2.1.3.1 lists the minimum vertical clearance requirements for trunk highway underpasses.

Table 2.1.3.1
Vertical Clearance for Underpasses

TYPE OF STRUCTURE	DESIGN VERTICAL CLEARANCES
Trunk Highway Under Roadway Bridge	16'-4"
Trunk Highway Under Railroad Bridge	16'-4"
Railroad Under Trunk Highway Bridge	23'-0" *
Trunk Highway Under Pedestrian Bridge	17'-4"
Trunk Highway Under Sign Bridge	17'-4"
Portal Clearances on Truss or Arch	20'-0"

* Critical vertical clearance point offset 8'-6" from centerline of track, statutory minimum vertical clearance is 22'-0".

For trunk highway bridges over local streets and roads, the minimum vertical clearance is 16'-4" for rural-suburban designs and 14'-6" for urban designs. For trunk highways crossing local roads or streets at a

freeway interchange, 16'-4" clearance is required. A complete list of vertical clearances for local roads and streets is found in the *State-Aid Operations Rules*, Chapter 8820.

The 2001 edition of the AASHTO book, *A Policy on Geometric Design of Highways and Streets*, recommends 16'-0" of clearance for highway bridges and 17'-0" for pedestrian bridges and sign bridges for freeways and arterials, a minimum clearance of 1'-0" above the legal vehicle height, and an allowance for future pavement resurfacing. (See pages 476, 511, and 767.) The legal height of a truck in Minnesota is 13'-6", which, when the additional 1'-0" is added, gives 14'-6". A 4" allowance for a future overlay added to the 16'-0" and 17'-0" clearances gives the standard 16'-4" and 17'-4" dimensions. The Truck Permits Unit of Mn/DOT reports 5 to 20 permit requests a day for load heights of 15'-0" or greater and a few every day for load heights over 15'-6".

The clearance over highways applies to the traffic lanes and full usable width of shoulders.

The additional foot of clearance under pedestrian and sign bridges is provided because these bridges are much less substantial and could collapse in the event of a hit.

Where bikeways pass under a bridge or through a tunnel, a vertical clearance of 10'-0" is desirable for adequate vertical shy distance. (See AASHTO *Guide for the Development of Bicycle Facilities*, August 1991, page 25.) Where this is impractical to obtain, a lesser clearance down to a minimum of 8'-0" is acceptable. Clearances below 10 feet on the local road system will require a variance to the *State-Aid Operations Rules*, Chapter 8.

The 23'-0" clearance over railroads allows for future ballast to be added to the line. If this clearance cannot be met, the Railroad Administration Section of the Office of Railroads and Waterways should be contacted. A clearance between 22'-0" (legal minimum) and 23'-0" may be used with approval of the railroad. For clearances below 22'-0", approval from the Rail and Motor Carrier Procedures Unit of Mn/DOT is required and may be granted in instances where clearance on the line is limited by other bridges likely to remain in place for a substantial time.

Vertical Clearance over Waterways

1) Non-Navigable Waterways

   A 3'-0" minimum clearance between the 50-year flood stage and low point on the bridge superstructure is recommended. This amount of

clearance is desired to provide for larger floods and also for the passage of ice and/or debris. If this amount of clearance is not attainable due to constraints relating to structure depth, roadway grades or other factors, reduced clearance may be allowed. The Preliminary Bridge Plans Engineer, after consultation with the Hydraulics Section and the Mn/DOT District Office, will determine the required clearance.

2) Navigable Waterways

a) Waterways that require a construction permit from Coast Guard (generally considered to be waterways for commercial shipping):

- The Mississippi River downstream from I-694 in Fridley
- The Minnesota River downstream from Chaska
- The St. Croix River downstream from Taylors Falls
- The St. Louis River downstream from Oliver, Wisconsin.

Guide vertical clearances published by the Coast Guard are:

- Mississippi River:
  - 52'-0" above 2% flowline or 60'-0" above normal pool, whichever is greater, for the portion downstream of the Burlington Northern Railroad Bridge near the University of Minnesota (mile point 853.0).
  - 4'-0" above river stage of 40,000 c.f.s. for the river portion upstream (mile point 853.0 to 857.6).
- Minnesota River:
  - 55'-0" above normal pool from mouth to I-35W bridge (mile point 10.8).
  - 30.8 feet above 1881 high water from I-35W bridge to Chaska.
- St. Croix River:
  - 52'-0" above 2% flowline or 60'-0" above normal pool from mouth to Stillwater.
- St. Louis River:
  - The Bong Bridge over the St. Louis River Bay in Duluth has a vertical clearance of 120'-0".

The Preliminary Bridge Plans Engineer shall be consulted when establishing navigation clearances.

b) All Other Navigable Waterways

Bridges that cross waterways in other portions of the state may be required to provide for local pleasure boat traffic. Vertical clearance for these bridges will be determined on an individual

basis, based on local needs. The Mn/DOT District Office will make this determination based on a survey of boats using the waterway.

Vertical and Horizontal Alignment

Information governing vertical curves, horizontal curves, and sight distance may be found in the *Road Design Manual* and *Technical Manual*.

When preparing preliminary bridge plans for the local road system, vertical and horizontal alignment charts from the *State-Aid Manual* shall be employed.

2.1.4 Geometric Details

Specific geometric details for bridge decks and undercrossings are shown in the following figures:

Figure 2.1.4.1	2-Lane Highway (Rural)
Figure 2.1.4.2	2-Lane Highway (Urban)
Figure 2.1.4.3	4-Lane Divided Highway (Rural)
Figure 2.1.4.4	4-Lane Divided Highway (Urban)
Figure 2.1.4.5	6-Lane Divided Highway (Rural)
Figure 2.1.4.6	6-Lane Divided Highway (Urban)
Figure 2.1.4.7	6" Raised Island, Turn Lanes, and Sidewalk (Urban)
Figure 2.1.4.8	Ramps (Rural and Urban)
Figure 2.1.4.9	Local Roads (Rural)
Figure 2.1.4.10	Local Roads (Urban)
Figure 2.1.4.11	Railroad Clearances
Figure 2.1.4.12	Minimum Lateral Clearances (Urban)

The above figures for various roadway types show sections as viewed assuming traffic flow from bottom to top of page. Starting at the bottom of the sheet, the typical fill roadway section to a bridge approach is shown. The fill slope transitions to a 1:3 slope at the bridge. The section above it shows a section of this road on the bridge deck. The third section from the bottom is a continuation of the roadway as it approaches a crossing under a bridge; the back slope transitions to a 1:2 maximum slope at the bridge. The top section shows this roadway at the point where a bridge crosses this roadway.

Where a range of side slopes is shown on the approaching roadway section, Road Design should determine the slope used.

ALTERNATE A:

WHERE DRAINAGE IS NOT CARRIED THROUGH DITCHES UNDER BRIDGE OR WHERE THE USE OF DITCH CULVERTS WILL NOT INTRODUCE A SIGNIFICANT SAFETY HAZARD.

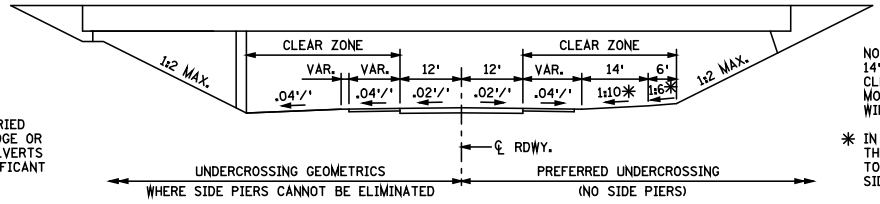

NOTE:
14' AND 6' DIMENSIONS PROVIDE A 30' CLEAR ZONE WITH A 10' SHOULDER. MODIFY FOR DIFFERENT SHOULDER WIDTHS AND CLEAR ZONES.

* IN LIEU OF THE 1:10 AND 1:6 SLOPES THE .04'/' SLOPE MAY BE EXTENDED TO THE 1:2 SLOPE (SAME AS OTHER SIDE).

SECTION

UNDER STRUCTURE (ALTERNATE A)

ALTERNATE B:

WHERE DRAINAGE MUST BE CARRIED THROUGH SIDE DITCHES AND CULVERTS CANNOT BE USED WITHOUT INTRODUCING A SAFETY HAZARD AT INLET OR OUTLET.

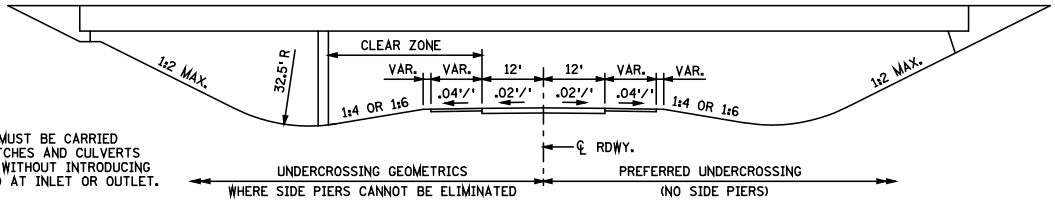

SECTION

UNDER STRUCTURE (ALTERNATE B)

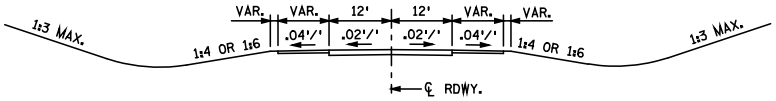

SECTION

APPROACHING ROADWAY

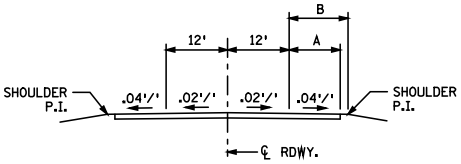

SECTION

APPROACHING ROADWAY

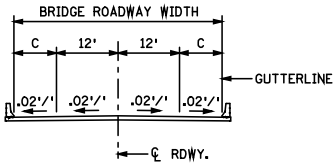

SECTION

BRIDGE DECK

HIGHWAY CATEGORY (FUNCTIONAL CLASS) AND PROJECTED ADT	USABLE SHOULDER WIDTH B	BRIDGE SHOULDER WIDTH C	BRIDGE ROADWAY WIDTH
PRINCIPAL ARTERIAL			
0 - 1499	6'	6'	36'
1500 - 2999	9.5'	10'	44'
3000 & ABOVE	11.5'	12'	48'
MINOR ARTERIAL			
0 - 1499	6'	6'	36'
1500 - 2999	7.5'	8'	40'
3000 & ABOVE	9.5'	10'	44'
COLLECTOR			
0 - 149	1' OR 3' (1)	4'	32'
150 - 1999	5' OR 5.5' (2)	6'	36'
2000 -4999	5.5' OR 7.5' (3)	8'	40'
5000 & ABOVE	7.5'	10'	44'

NOTES:

BRIDGE SHOULDER WIDTH EQUALS USABLE SHOULDER WIDTH ROUNDED UP TO THE NEAREST FOOT, EXCEPT AS NOTED BELOW.

MINIMUM SHOULDER WIDTH IS 4'.
WIDTHS MEET A MINIMUM FEDERAL APPRAISAL RATING OF 6.

BRIDGE ROADWAY WIDTH IS MEASURED GUTTER TO GUTTER.

(1) 1' FOR < 50 ADT, 3' FOR 50-149 ADT.

(2) 5' FOR 150-1499 ADT, 5.5' FOR 1500-2999 ADT.

(3) 5.5' FOR 1500-2999 A.D.T.
7.5' FOR A.D.T. ≥ 3000.

A- SURFACED SHOULDER.

B- USABLE SHOULDER. EDGE OF LANE TO SHOULDER P.I. SEE ROAD DESIGN MANUAL TABLE 4-4.01B.

C- SEE TABLE FOR C.

Figure 2.1.4.1
Geometrics
2-Lane Highway (Rural)

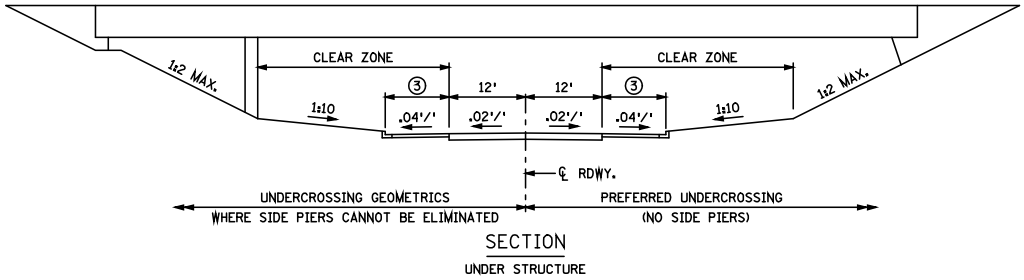

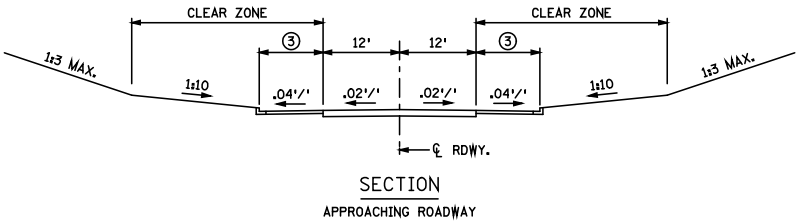

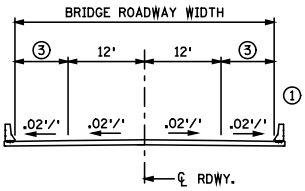

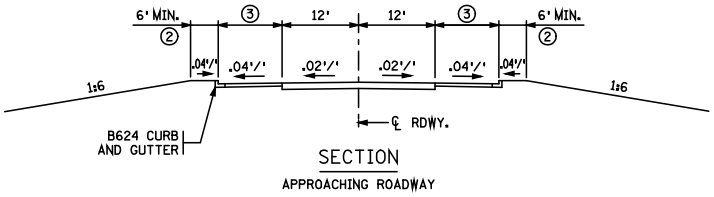

① SEE FIG. 2.1.4.7 WHERE SIDEWALKS ARE WARRANTED.
② INCREASE AS NECESSARY TO MATCH SIDEWALK NEEDS.
③ VARIES 10' TYPICAL.

Figure 2.1.4.2
Desirable Geometrics
2-Lane Highway (Urban)

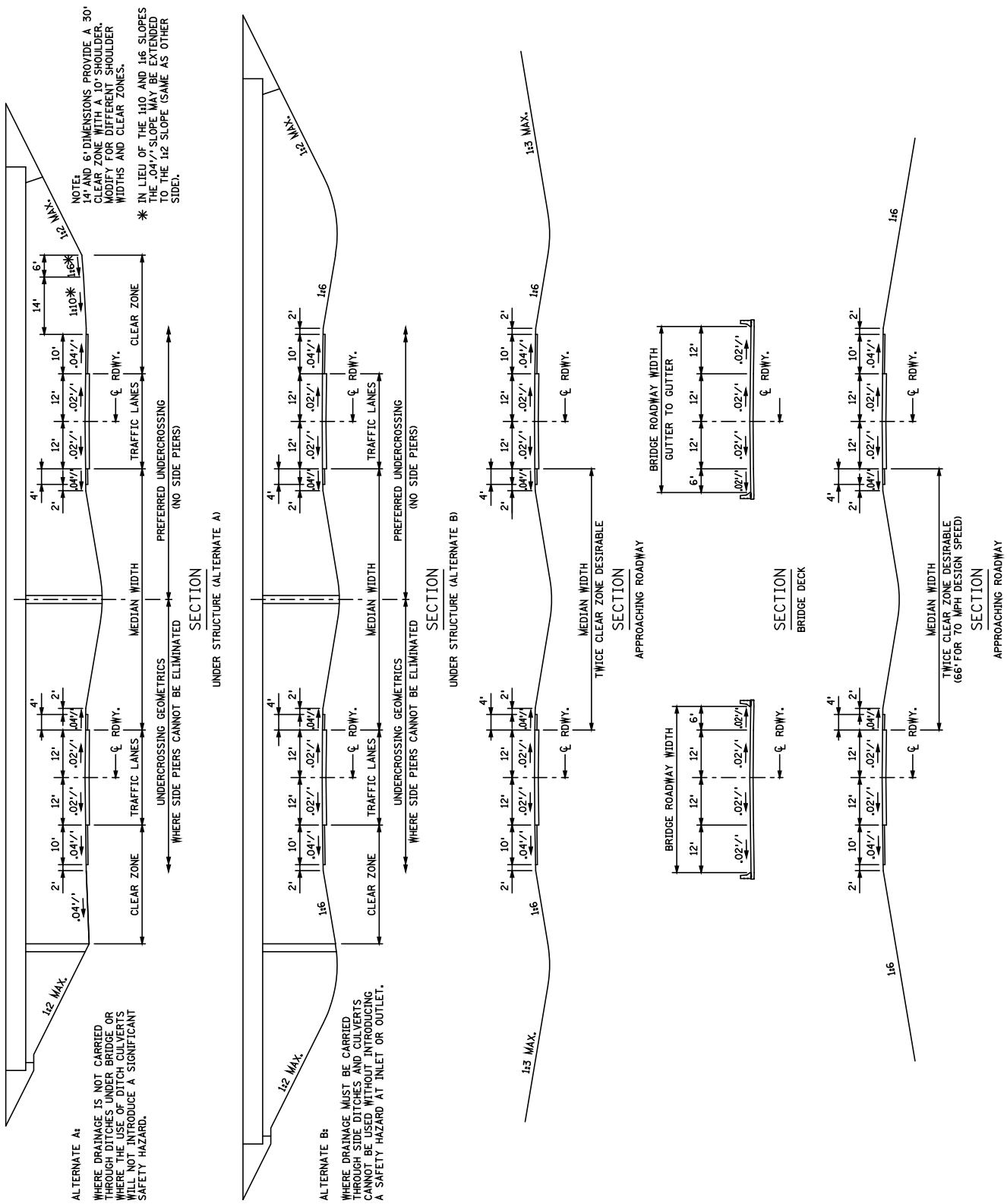

Figure 2.1.4.3
Desirable Geometrics
4-Lane Divided Highway (Rural)

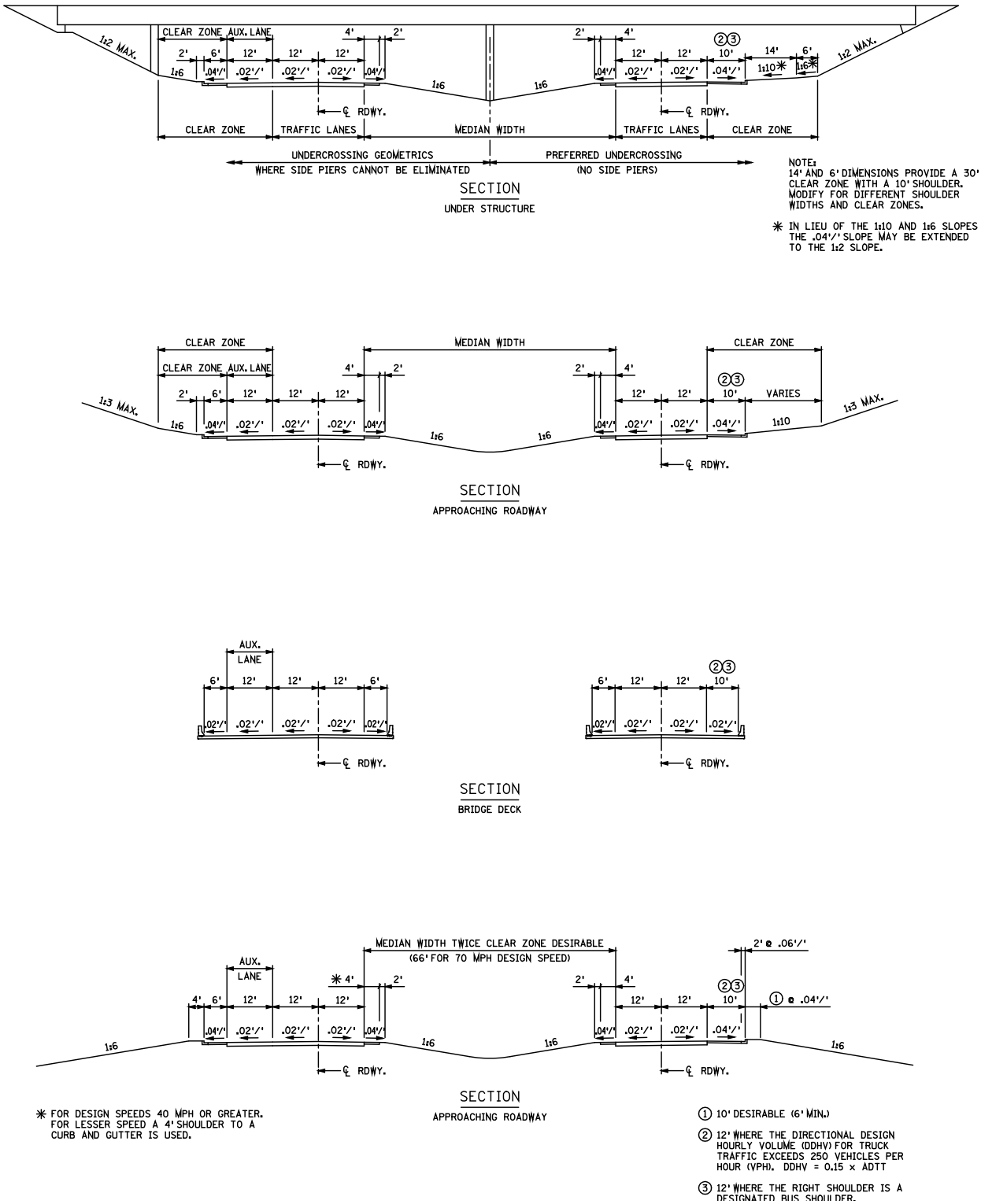

Figure 2.1.4.4
Desirable Geometrics
4-Lane Divided Highway (Urban)

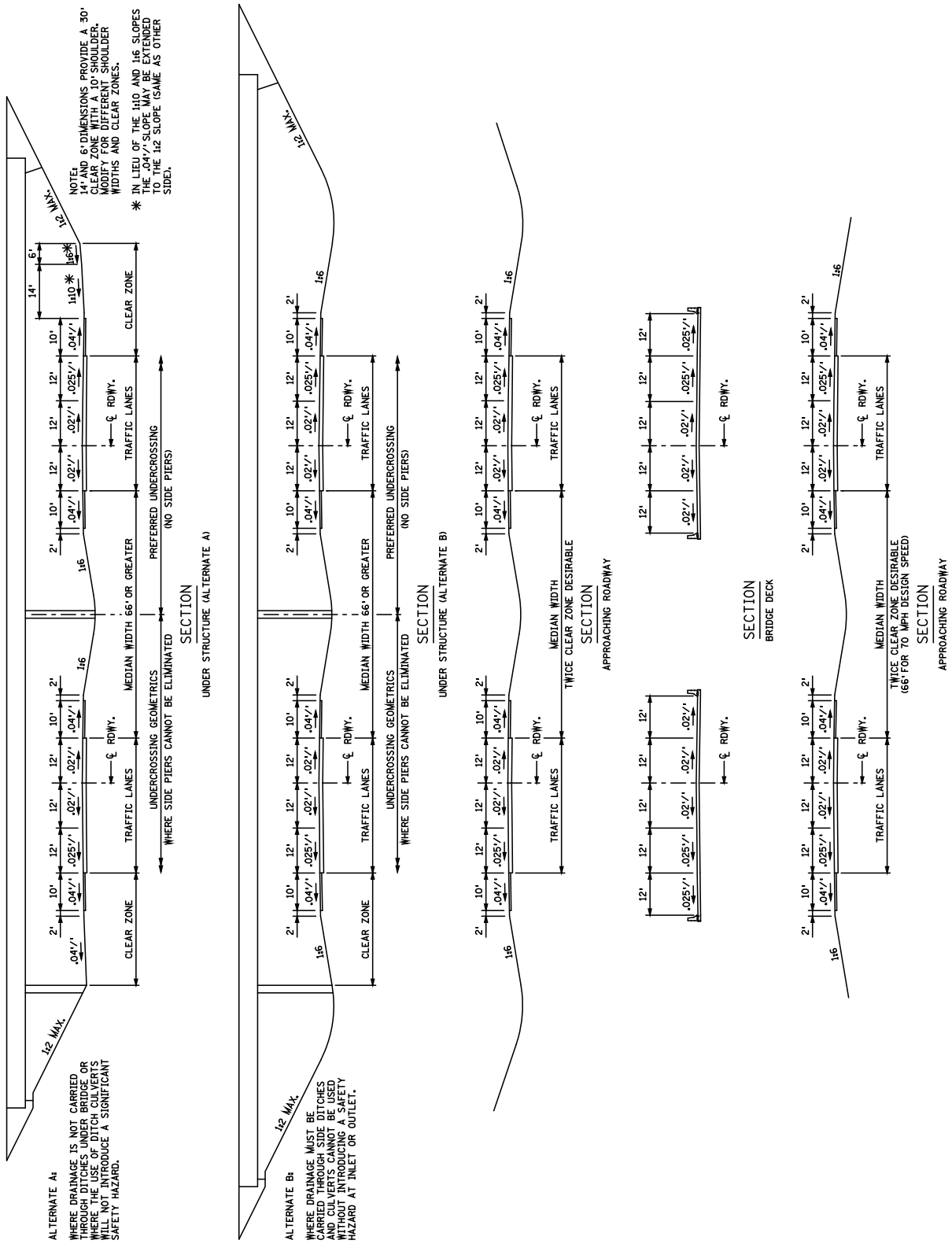

Figure 2.1.4.5
Desirable Geometrics
6-Lane Divided Highway (Rural)

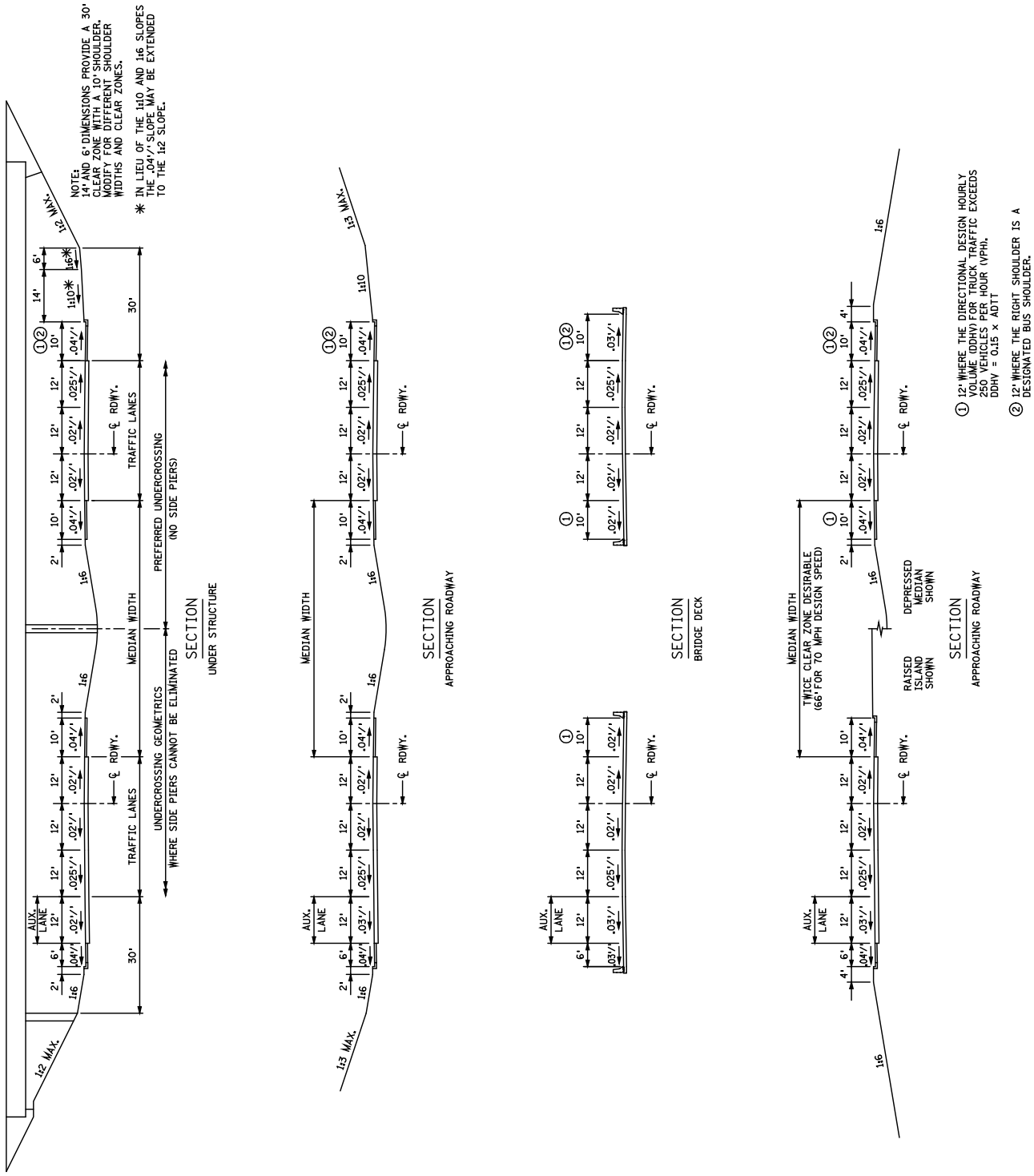

Figure 2.1.4.6
Desirable Geometrics
6-Lane Divided Highway (Urban)
(Details for 8-Lane Divided Highway Are Similar)

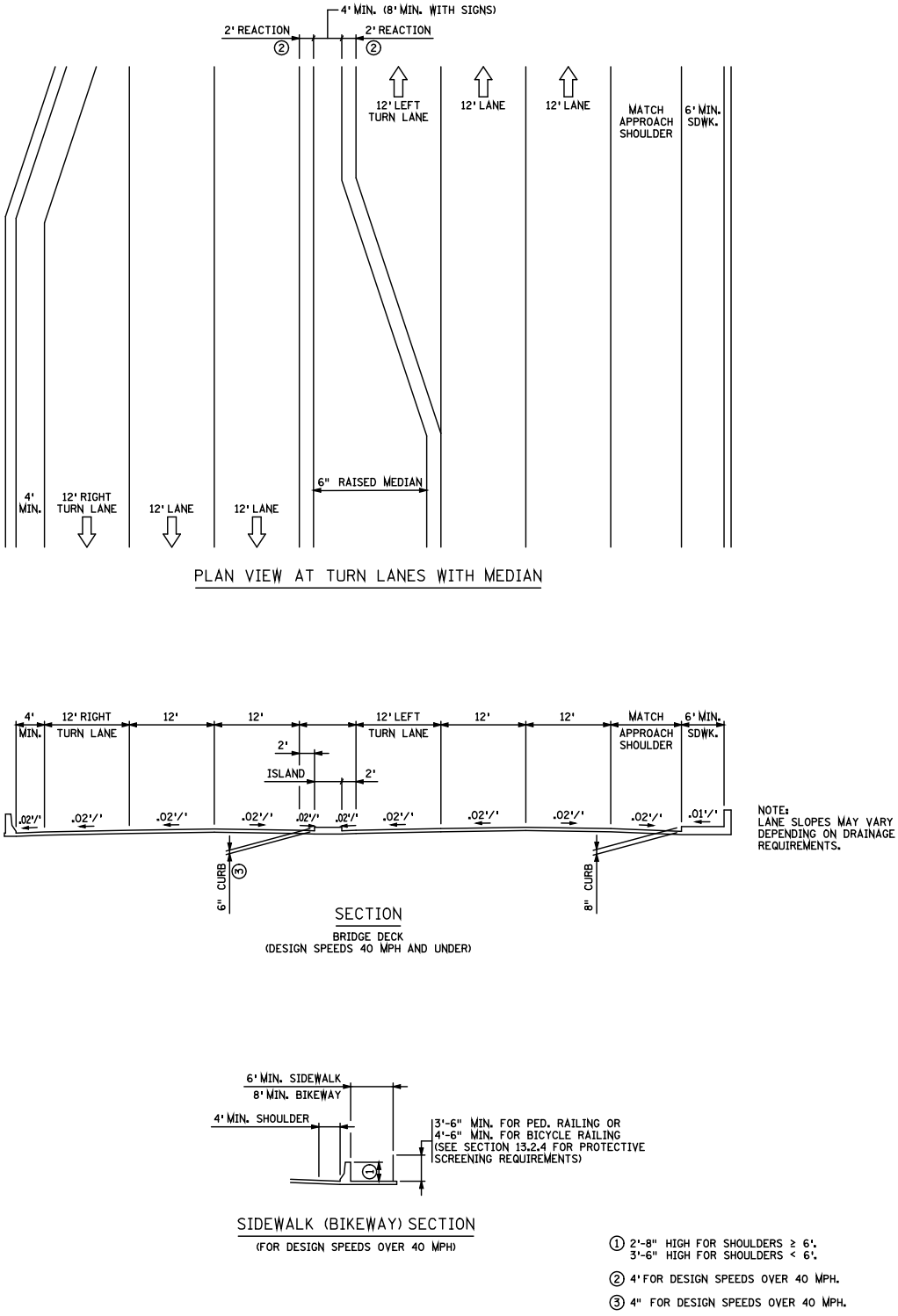

Figure 2.1.4.7
Desirable Geometrics
6" Raised Island, Turn Lanes, and Sidewalks (Urban)

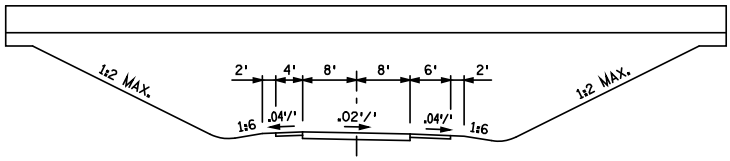

SECTION
UNDER STRUCTURE

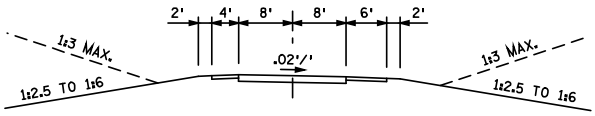

SECTION
APPROACHING RAMP

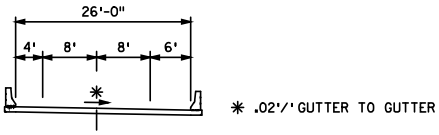

SECTION
BRIDGE DECK

RURAL

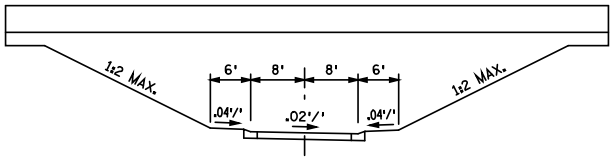

SECTION
UNDER STRUCTURE

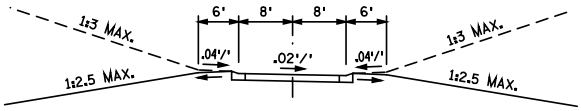

SECTION
APPROACHING RAMP

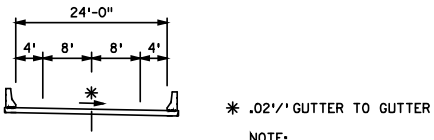

NOTE:
GUTTER LINE ON RAMP MUST FLARE
OUT TO MATCH BRIDGE GUTTER.

SECTION
BRIDGE DECK

URBAN

Figure 2.1.4.8
Desirable Geometrics
Ramps (Rural and Urban)

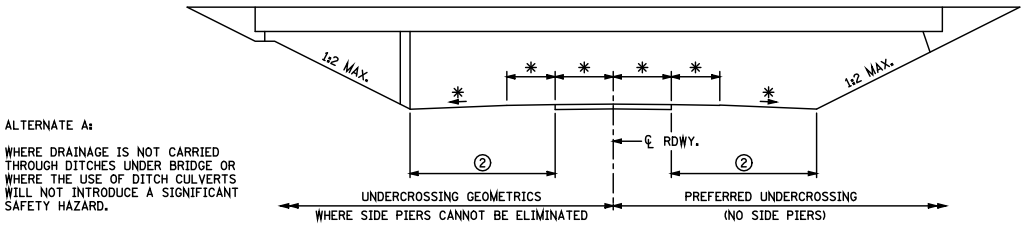

ALTERNATE A:

WHERE DRAINAGE IS NOT CARRIED THROUGH DITCHES UNDER BRIDGE OR WHERE THE USE OF DITCH CULVERTS WILL NOT INTRODUCE A SIGNIFICANT SAFETY HAZARD.

SECTION

UNDER STRUCTURE (ALTERNATE A)

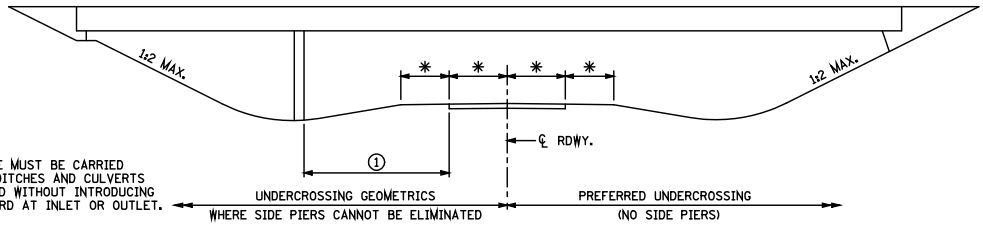

ALTERNATE B:

WHERE DRAINAGE MUST BE CARRIED THROUGH SIDE DITCHES AND CULVERTS CANNOT BE USED WITHOUT INTRODUCING A SAFETY HAZARD AT INLET OR OUTLET.

SECTION ③

UNDER STRUCTURE (ALTERNATE B)

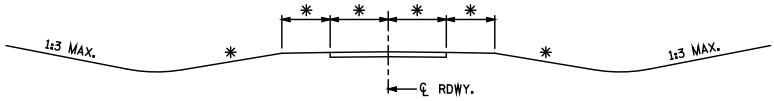

SECTION

APPROACHING ROADWAY (UNDER STRUCTURE)

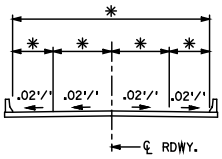

SECTION

BRIDGE DECK

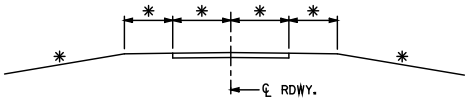

SECTION ③

BRIDGE APPROACH ROADWAY

GEOMETRICS DESIGN STANDARDS FOR RURAL UNDIVIDED (NEW OR RECONSTRUCTION)					
PROJECTED ADT ④ ⑥	LANE WIDTH	SHOULDER WIDTH	INSLOPE ①	RECOVERY AREA ②	NEW AND REHABILITATED BRIDGES WIDTH CURB TO CURB
0 TO 49	11'	1'	1:3	7'	26'
50 TO 149	11'	3'	1:4	9'	28'
150 TO 749	12'	4' ③	1:4	15'	32'
750 TO 1499	12'	4'	1:4	25'	32'
1500 & OVER	12'	6' ⑤	1:4	30'	36'

BETWEEN RAMP TERMINALS AT INTERCHANGES USE SAME DESIGN AS 2-LANE STATE HIGHWAY. SEE DEPARTMENT OF TRANSPORTATION STATE AID OPERATIONS RULES CHAPTER 8820 FOR URBAN STANDARDS.

① APPLIES TO SLOPE WITHIN RECOVERY AREA ONLY.

② OBSTACLE-FREE AREA (MEASURED FROM EDGE OF TRAFFIC LANE). CULVERTS WITH LESS THAN 30" VERTICAL HEIGHT ALLOWED WITHOUT PROTECTION IN RECOVERY AREA.

③ INITIAL ROADBED WIDTH MUST BE ADEQUATE TO PROVIDE A FINISHED ROADBED WIDTH FOR TEN-TON DESIGN.

④ USE THE EXISTING TRAFFIC FOR HIGHWAYS NOT ON THE STATE-AID OR FEDERAL-AID SECONDARY (FAS) SYSTEMS.

⑤ SHOULDERS ARE REQUIRED TO BE A MINIMUM WIDTH OF 8' FOR HIGHWAYS CLASSIFIED AS MINOR ARTERIALS AND PRINCIPLE ARTERIALS.

⑥ GUARDRAIL END TREATMENT IS REQUIRED AT ALL BRIDGES WHERE THE DESIGN SPEED EXCEEDS 40 MPH, AND EITHER THE ADT EXCEEDS 749 OR THE BRIDGE CLEAR WIDTH IS LESS THAN THE SUM OF THE LANE AND SHOULDER WIDTHS.

✱ SEE TABLE.

Figure 2.1.4.9
Local Roads
(Rural)

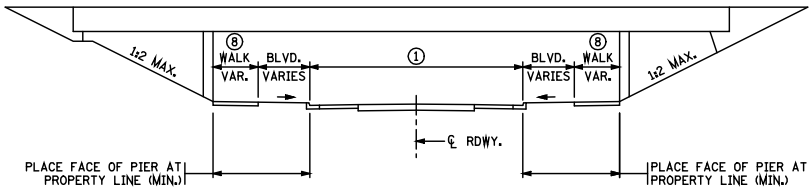

SECTION

UNDER STRUCTURE

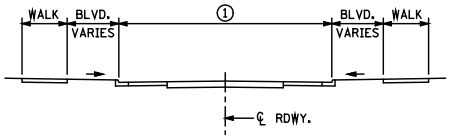

SECTION

APPROACHING ROADWAY (UNDER STRUCTURE)

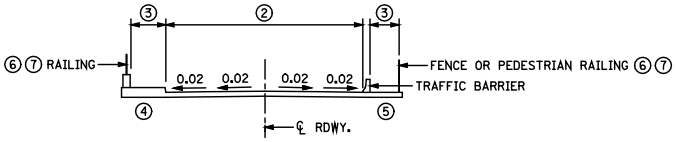

SECTION

BRIDGE DECK

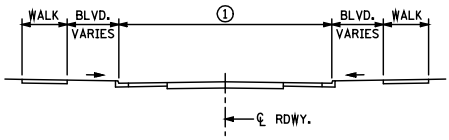

SECTION

BRIDGE APPROACH ROADWAY

1. WIDTH OF APPROACH ROADWAY
2. SAME WIDTH AS APPROACH ROADWAY, BUT NOT LESS THAN 44' OR (NO. OF LANES x 12') + 4' MIN. TO EACH CONCRETE BARRIER: OR 2' MIN. TO EACH CURB OR SIDEWALK.
3. LOCAL REQUIREMENTS FOR SIDEWALK: 5' MIN. FOR ONE-WAY, 8' FOR TWO-WAY
4. SIDEWALK SECTION FOR LESS THAN 45 MPH
5. SIDEWALK SECTION FOR 45 MPH DESIGN OR MORE.
   NOTE:
   BETWEEN RAMP TERMINALS AT INTERCHANGES, THE CROSSROAD SHOULD BE CONSTRUCTED TO TRUNK HIGHWAY STANDARDS, IN ALL BUT URBAN LOCATIONS. THIS WILL REQUIRE SHOULDERS ON THE BRIDGE. AS A MINIMUM AT INTERCHANGES, USE A BRIDGE WIDTH FOR A 2-LANE STATE HIGHWAY.
6. MINIMUM REQUIRED HEIGHT OF RAIL ABOVE TOP OF SIDEWALK:
   42" FOR PEDESTRIAN TRAFFIC
   54" FOR BICYCLE TRAFFIC
7. WHERE PROTECTIVE SCREENING (8' TOTAL HEIGHT) IS REQUIRED, USE THE FOLLOWING:
   6' HEIGHT FENCE ON TOP OF CONCRETE PARAPET RAIL OR
   8' HEIGHT FENCE
8. IF THE WALKWAY CARRIES BICYCLE TRAFFIC, THEN A 2' SHOULDER IS REQUIRED BETWEEN THE WALKWAY AND THE FACE OF THE PIER.

Figure 2.1.4.10
Local Roads
(Urban)

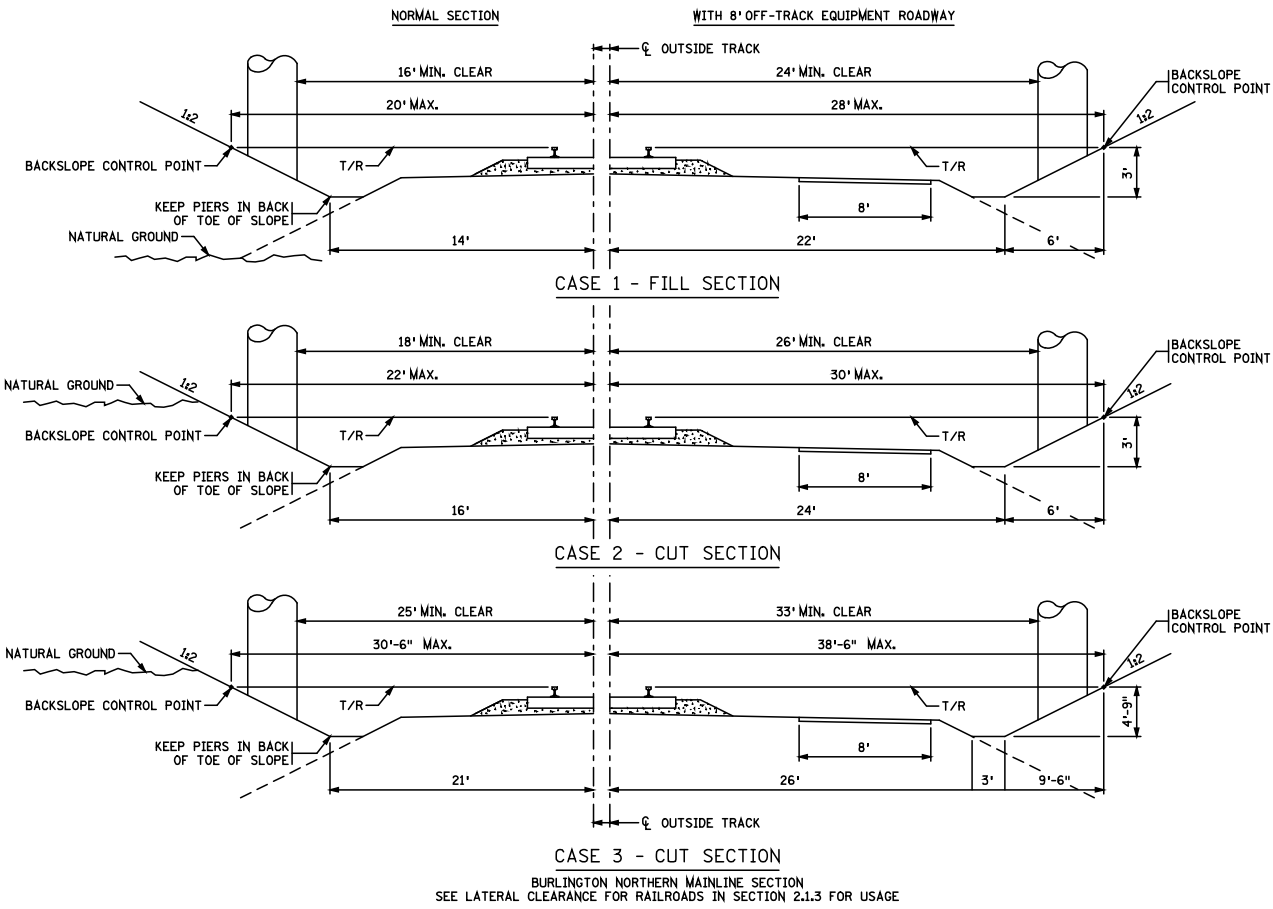

LOCATION OF PIERS AND BACKSLOPES

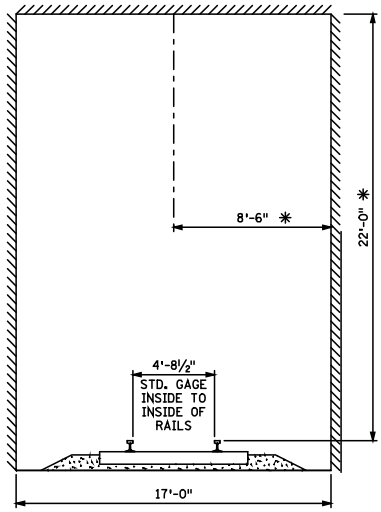

DITCH SECTIONS WITHIN BACKSLOPE CONTROL POINTS MAY VARY WITH RAILROADS.

FOR PIERS WITHIN 50'-0" OF TRACK CENTERLINE, SEE SPECIAL REQUIREMENTS IN SECTION 2.3.2 OF THIS MANUAL.

✳ THE 22'-0" AND 8'-6" DIMENSIONS ARE STATUTORY MINIMUM. FOR DESIGN USE 23' AND 9' MINIMUM.

DIAGRAM OF STATUTORY CLEARANCE FOR STRUCTURES, BRIDGES AND TUNNELS

Figure 2.1.4.11
Railroad Clearances

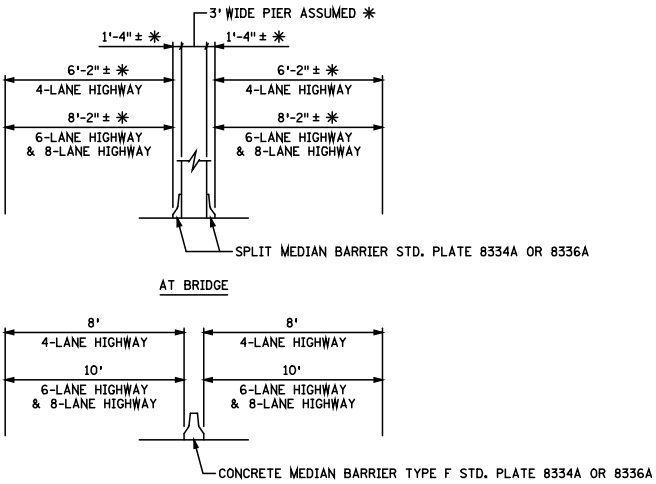

MEDIAN CLEARANCE

URBAN HIGHWAYS WITH CONTINUOUS MEDIAN BARRIERS

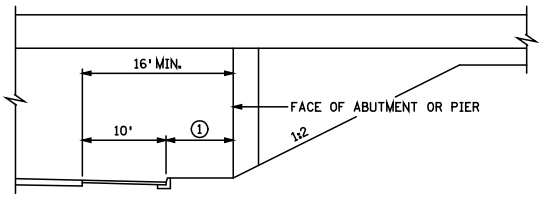

CLEARANCE RIGHT OF TRAFFIC LANE

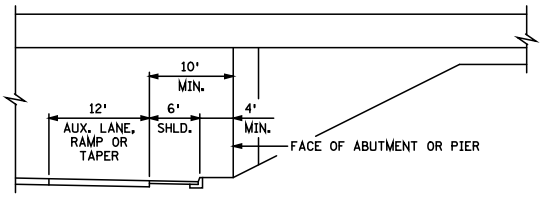

CLEARANCE RIGHT OF AUXILIARY LANE

THE MINIMUMS SHOWN APPLY TO NEW CONSTRUCTION AT ALL CROSSINGS, (i.e. FOR BRIDGES CARRYING RAILROAD TRAFFIC AND FOR BRIDGES CARRYING HIGHWAY TRAFFIC).

1 SAME WIDTH AS APPROACHING BERM (6' MIN.).

✳ CLEARANCE WILL VARY WITH PIER THICKNESS. DIMENSIONS SHOWN ARE FOR A 3' WIDE PIER AND SPLIT MEDIAN BARRIER WITH GLARE SCREEN.

Figure 2.1.4.12
Minimum Lateral Clearances

2.1.5 Bridge Railings

See Section 13 of this manual for the policy on design of bridge railings for Mn/DOT projects.

2.2 Bridge Aesthetics

The aesthetic design process is initiated early in a bridge project's life. The Preliminary Bridge Plans Engineer will determine which of three levels of aesthetic attention is appropriate for the bridge.

- Level A is intended for bridges with major cultural or aesthetic significance.
- Level B is used for mid-level structures, including highway corridors.
- Level C is used for routine bridges.

Maximum levels of Mn/DOT participation in aesthetic costs are given in the *Mn/DOT Policy Manual*, Chapter 6, 6-41. For Level A the maximum is 15% but not to exceed $3 million per bridge; for Level B the maximum is 7% but not to exceed $300,000 per bridge; for Level C the maximum is 5% but not to exceed $200,000 per bridge.

The Preliminary Bridge Plans Engineer along with the District Project Manager coordinates the implementation of the aesthetic design process as it relates to bridges. Other people, offices, agencies, etc. may also be involved. The extent of this involvement may vary depending on the individual project and its aesthetics level. This process leads to the development of an Aesthetic Plan for the bridge. Once the project reaches the final stage, the Bridge Design Unit Leader directs the implementation of the Aesthetic Plan to completion with assistance from the Preliminary Bridge Architectural Specialist as needed.

Section 3 of the *Aesthetic Guidelines for Bridge Design Manual* describes the process of aesthetic design in more detail.

2.3 Preliminary Bridge Plans

2.3.1 General

Purpose

The Preliminary Bridge Plan serves to document the main features of the bridge (type, size, location, aesthetics, etc.) and is used to obtain approvals and coordination before final design begins. By doing this, the time and expense of revising a completed plan will hopefully be avoided. The plan coordinates the work between Road Design and the Bridge Office and enables the cost and scope of the work to be estimated.

Specific users of the plan include:

- Road Design to verify the grade, alignment and roadway widths and to obtain the approximate limits of grading, paving and guardrail at the bridge ends.

- FHWA to review and approve projects.
- Bridge Agreements and Permits Unit to select and negotiate contracts with consultants.
- Final Bridge Design Units and Consultants to prepare final plans.
- Bridge Programs and Estimates Unit to prepare a preliminary estimate of the bridge costs.
- DNR, Coast Guard, Corps of Engineers and Watershed Districts to review and issue required permits for stream crossings.
- Cities, Planning Agencies, and citizen groups to review and approve projects.
- Site Development Unit to recommend aesthetic treatments.
- Signing, Lighting, and TMC Units to convey their needs on the new bridge.
- Railroad Administration Section for use in negotiating railroad agreements.

In preparing preliminary bridge plans, the plan users should always be kept in mind, particularly those without bridge or technical experience.

Requirements for Preliminary Bridge Plans

Preliminary bridge plans are required for all new trunk highway bridges (including Mn/DOT precast concrete arch structures) and all bridge widenings where substructure widening is required. In addition, preliminary plans signed by the State Bridge Engineer are required for all county and local bridges that cross a trunk highway. Preliminary bridge plans are not required for culverts, overlays, deck replacements, and other projects where substructures are not widened.

The Bridge Preliminary Unit normally prepares preliminary plans for new trunk highway bridges, although consultants occasionally develop plans. Preliminary plans for bridge widenings are normally prepared by the Bridge Design Units since significant design work is required to evaluate the existing structure and schemes for widening and handling traffic.

Preliminary plans prepared by Consultants or Design Units are submitted to the Bridge Preliminary Unit for review, submittal to the State Bridge Engineer for signature, and distribution of signed copies.

Contents

The Preliminary Bridge Plan consists of a general plan and elevation sheet and survey sheet with borings. For the more complex urban structures additional road design sheets giving alignment, superelevation diagrams, utilities, contours, traffic staging or intersection layout may be included. The Preliminary Bridge Plan contains: plan and elevation views, a cross

section, design data, data on the type of structure, foundation requirements, and aesthetic treatment. When aesthetics are of special importance, architectural type drawings showing the proposed treatment or type of construction may also be included. For bridge widenings, the survey sheet may be eliminated or a copy of the survey sheet from the existing bridge may be included.

Preparation of Preliminary Bridge Plans

The steps involved in preparing a typical preliminary plan set for a new trunk highway bridge by the Preliminary Unit are as follows:

1) Layouts are received from Pre-Design and bridge numbers are assigned and listed in PPMS.
2) Bridge Survey sheets are received from the district surveys section. Copies are sent to the Foundations Unit of the Office of Materials and Research requesting soil borings. For stream crossings a copy is sent to the Hydraulics Unit requesting a hydraulics analysis.
3) A depth of structure and span arrangement are determined using the layout and Waterway Analysis and are given to Road Design. This typically involves communication between the Bridge Office, Road Design, and Hydraulics to arrive at a structure depth and span arrangement that produces the best overall solution. If a railroad is involved, negotiations are held with the railroad to determine what features should be incorporated into the plan to satisfy the railroad's needs and also meet Mn/DOT standards.
4) Final grades and alignment are received from Road Design.
5) Traffic data is requested and received from the district traffic office.
6) The Preliminary Bridge Plans Engineer, District Project Manager, and Environmental Services Section determine the extent of aesthetic treatment.
7) A CADD operator is assigned the project and drafting of the plan begins. Clearances are checked and more exact span lengths determined.
8) Borings are received electronically from the Foundations Unit and plotted on the survey sheets.
9) The Engineering Specialist in the Design Unit checks the completed preliminary package, except the foundation type.
10) The preliminary package is given to the Regional Bridge Construction Engineer along with the foundation report for determining pile type, lengths, and bearing. When received, the pile information is added to the preliminary plan.
11) The completed Preliminary Bridge Plan is reviewed with the Bridge Planning and Hydraulics Engineer and taken to the State Bridge Engineer for signature.

Time Schedule for Preliminary Plan Preparation

The time schedule for receiving information and completing preliminary bridge plans for normal bridges, as given in PPMS, is shown in Table 2.3.1.1.

Table 2.3.1.1
Preliminary Plan Time Schedule

WORK ITEM	TIME PRIOR TO SCHEDULED LETTING DATE
Bridge Survey	17 months
Hydraulics	14 ½ months
Grades and Alignment	14 ½ months
Foundations	13 months
Preliminary Plan Completed	12 months

Additional lead-time is required for major bridges, bridges involving agreements with cities or railroads, and bridges with extensive aesthetic requirements.

Use of Preliminary Bridge Plans

The completed and signed Preliminary Bridge Plan becomes the department's official proposal for that structure. The following steps are then taken:

1) Unless cost estimates have been prepared to determine structure type, the Program and Estimates Unit of the Bridge Office prepares an estimated contract construction cost for the structure. This is generally based on an estimated cost per square foot.

2) Sets of prints of the Preliminary Bridge Plan are distributed to the various offices of Mn/DOT and outside agencies for information, review, and approval, as the case may be. (See Table 2.3.1.2.)

   Approval by all concerned of the proposed structure dimensions, type of construction, and geometrics before the start of final design is one of the most important functions of the Preliminary Bridge Plan. This is particularly true of stream crossings, railroad crossings (over and under), and structures requiring special aesthetic treatment.

NORMAL DISTRIBUTION OF PRELIMINARY BRIDGE PLANS

BRIDGE OFFICE TO:	NO. OF SETS	FOR TRANSMITTAL TO:	PURPOSE		REMARKS
			INFO. & REVIEW	APPROVAL	
District Engineer	1		X		Sent with cost estimate by Bridge Estimating Unit. Comments, if any, given to Bridge Office.
District – Final Design Engineer	1		X		Comments, if any, to Bridge Office. For stream crossings the District Hydraulics Engineer may include plan with application for DNR, Army Corps of Engineers, or watershed permits. Copies of permits are to be filed with Central Office Right of Way.
Federal Highway Administration - Bridge Engineer	(2)	(1) (2)		X	Sent with estimate by Bridge Estimation Unit. Foundations Report to be included with plan. Copy of Bridge Office transmittal letter returned stamped APPROVED or letter of reply with qualifications sent to Commissioner.
Traffic, Security, and Operations	1		X		Reply to Bridge Office as to need for lights, signals, and conduits bridge mounting signs.
Geotechnical Engineering Section - Foundations	1		X		Comments, if any, given to Bridge Office.
Freeway Operations – Traffic Management Center (TMC)	1		X		Reply to Bridge Office as to need for conduit, and mounting devices for surveillance system.
Technical Support – Utility Agreements and Permits Unit (UAPU)	2	Review with affected utilities.	X		Sent by Bridge Utilities Coordinator (BUC).
Freight and Commercial Vehicle Operations	4 (minimum)	Four sets of prints for each railroad involved.		X	Railroad crossings only.

(1) Unusual bridges and structures on the Interstate System are forwarded to the FHWA Headquarters Division in Washington for approval. The Washington Office is available for technical assistance on other Federal-aid and non-Federal-aid structures when requested.

(2) Refer to 2.3.1 for plans that must be sent to FHWA for approval.

Table 2.3.1.2

The Federal Highway Administration (FHWA) is one of the outside agencies that reviews bridge projects. The following categorizes bridge projects according to the amount of FHWA oversight required and also sets forth submittal requirements:

- Bridge Projects that Require Full Oversight by FHWA
  This category includes new or reconstruction (rehabilitation and improvement) bridge projects on the Interstate System with total project cost more than $1,000,000 (bridges that carry interstate traffic and interchange bridges). It also includes other National Highway System bridges in which the bridge structure estimated cost is equal to or over $10 million. Preliminary bridge plans, if prepared, as well as final plans, specifications and estimates (PS&E) will be submitted to FHWA for approval. Final plans at 85% to 90% completion will also be submitted to FHWA for concurrent review. Please note that preliminary plans are not normally prepared for bridge improvement projects.

- Bridge Projects that Require Partial Oversight by FHWA
  This category includes new or reconstruction (rehabilitation and improvement) bridge projects that carry traffic over the Interstate Highway regardless of funding source. Preliminary bridge plans, if prepared, will be submitted to FHWA for approval. This submission is only for the purpose of evaluating horizontal and vertical clearances on the Interstate System.

- Bridge Projects for which Mn/DOT Maintains Oversight
  This category includes any bridge project not included in the above full and partial oversight categories.

The following apply to Bridge Projects that Require Full Oversight by FHWA, Bridge Projects that Require Partial Oversight by FHWA, and Bridge Projects for which Mn/DOT Maintains Oversight:

The Preliminary Bridge Plan will be submitted to FHWA with a transmittal letter. FHWA will not require a preliminary cost estimate but will review the preliminary plan, elevation, and transverse sections. It is very important that these plans be submitted to FHWA as soon as they are developed and prior to proceeding with final design.

Funding source does not change the above processes.

For Mn/DOT oversight projects, a courtesy copy of the letter transmitting the Preliminary Bridge Plan for the proposed bridge project will be sent to FHWA (without the plans) for informational purposes.

FHWA Headquarters Bridge Division shall be responsible for the approval of preliminary plans for unusual bridges and structures on the Interstate System. FHWA Headquarters Bridge Division will be available for technical assistance on other Federal-aid and non-Federal-aid highways when requested.

For the purpose of this guidance, unusual bridges are those bridges: (1) that have difficult or unique foundation problems, (2) that have new or complex designs with unique operational or design features, (3) with exceptionally long spans, (4) being designed with procedures that depart from currently recognized acceptable practices. Examples of unusual bridges include cable-stayed, suspension, arch, segmental concrete, movable, or truss bridges. Other examples are bridge types that are not addressed by the AASHTO bridge design standards and guide specifications, bridges requiring abnormal dynamic analysis for seismic design, bridges with spans exceeding 500 feet, and bridges with major supporting elements of "ultra" high strength concrete or steel.

Unusual structures include tunnels, geotechnical structures featuring new or complex wall systems or ground improvement systems, and hydraulic structures that involve complex stream stability countermeasures, or designs or design techniques that are atypical or unique.

Preliminary documents submitted to FHWA Headquarters should include the Preliminary Bridge Plan and supporting data along with FHWA Division's review comments and recommendations. Supporting information should include bridge/structures related environmental concerns and suggested mitigation measures, studies of bridge types and span arrangements, approach bridge span layout plans and profile sheets, controlling vertical and horizontal clearance requirements, roadway geometry, design specifications used, special design criteria, special provisions (if available), and cost estimates. Hydraulic and scour design studies/reports should also be submitted showing scour predictions and related mitigation measures. Geotechnical studies/reports should be submitted along with information on substructure and foundation types.

For these projects, the State Bridge Engineer will submit two copies of the Preliminary Bridge Plan along with a transmittal letter requesting approval directly to the Division Engineer of the Federal Highway Administration. The transmittal letter also includes the estimated contract construction cost of the structure. (See Figure 2.3.1.1 for a sample transmittal letter). The FHWA is the only outside agency to which the Bridge Office sends a direct request for approval. All other outside agencies are contacted through other offices of Mn/DOT.

3) The Preliminary Bridge Plan is used as a basis for preparing permit drawings to accompany applications to construct structures and approaches over navigable waters of the United States within or bordering our state. Such drawings are prepared in the Preliminary Plans Unit in accordance with detailed instructions issued by the U.S. Coast Guard. The Coast Guard is charged with the responsibility of issuing permits for bridges over navigable waters of the United States within or bordering our state. This includes all bridge spans (including land spans) from abutment to abutment. The Corps of Engineers is responsible for issuing permits for any other miscellaneous structures or work to be performed in navigable waters of the United States.

   There are two Coast Guard districts that have jurisdiction within the State of Minnesota; the 9th Coast Guard District based in Cleveland has jurisdiction over the Duluth harbor and navigable portion of the St. Louis River, and the 8th Coast Guard District based in St. Louis has jurisdiction over the navigable portions of the Mississippi, Minnesota, and St. Croix Rivers.

   After receiving a permit application, the Coast Guard issues a public notice of application with prints of the permit drawings. These are sent to shipping interests, other agencies, displayed in post offices, etc. Generally, if no comments are received from others within 30 days of the notice of application, and if environmental statements have been submitted and a certification given by the Minnesota Pollution Control Agency, a permit will be issued.

   Correspondence to the Coast Guard is generally prepared for the signature of the State Bridge Engineer.

4) When all approvals have been obtained, the Preliminary Bridge Plan is used as the basis for the bridge design and for the preparation of final detailed plans. If the design is to be by a consulting engineer, the

Preliminary Bridge Plan is also used as the basis for negotiation of the consultant fee.

Preliminary Plans for Local Bridges

Consult the State-Aid Bridge Web site at: http://www.dot.state.mn.us/bridge/StateAidBridge/ for the submittal and approval process of State-Aid Preliminary Bridge Plans.

Minnesota Department of Transportation

Bridge Office
Mail Stop 610
3485 Hadley Avenue North
Oakdale, MN 55128-3307

Office Tel: 651/747-2100
Fax: 651/747-2108

[*date*]

[*Recipient's Name*]
Division Administrator
Federal Highway Administration
Metro Square Building, Suite 490
Seventh and Robert Streets
Saint Paul, MN 55101

Bridge No. _____
Federal Project No. _____
Minnesota Project No. _____
S.P. _____
T.H. _____

Dear [*Recipient's Name*]:

Federal Funds will be requested for the construction of the above noted bridge. We have prepared a layout showing the proposed clearances and general dimensions of this structure. The contract construction cost of this structure is estimated at approximately $ [*amount*].

One set of prints of the Preliminary Plan dated [*date*], and bridge survey sheets are enclosed. This bridge is programmed for letting on [*date*].

Please review the above noted preliminary data. We would appreciate a written reply indicating your concurrence or comments on the proposed bridge layout and general dimensions.

Sincerely,

[*name*], State Bridge Engineer, Bridge Office

Enclosure
Preliminary Plans

cc: [*name*], District Engineer, District [*number*]
[*name*], Director, Program Support Group
[*name*], Bridge Design Engineer, Bridge Office
[*name*], Programs & Estimates Unit, Bridge Office
[*name*], Estimating Engineer, Office of Technical Support
[*name*], Director, Office of EEO

An equal opportunity employer

Figure 2.3.1.1

2.3.2 Bridge Type Selection

General

The type of structure and span arrangement selected will depend on cost, aesthetics, depth available, geometrics, and site conditions. For some bridges this may be an obvious choice. For others it may involve a great deal of study, especially if aesthetics is a main concern. The section that follows gives some general guidelines on the selection process.

Aesthetic Design Process

See Section 2.2 of this manual for a discussion of the aesthetic design process.

Structure Type

The most commonly used structure types and their characteristics are as follows:

1) Prestressed Concrete Beam

   This is the most common structure type in Minnesota. Advantages include: low initial and future maintenance costs, high quality factory produced product, a stiff deck, and simple spans that accommodate tapers. Beams are limited to standard depths and straight segments, and a maximum length of about 145 feet based on shipping limitations.

2) Welded or Rolled Steel Beam

   This type of structure is well suited to complex urban freeways with limited depth, long spans, and complex geometrics. Steel beam bridges are also well suited for areas with bad soils, such as the Red River Valley, as steel allows the flexibility of modifying the bearing location and adding or reducing span lengths to accommodate shifting abutments and piers. Advantages include: a shallower depth of structure than prestressed concrete, beams with the ability to be field spliced to produce long span lengths, web plates that can be cut to any depth or to a haunched shape, beams that can be curved horizontally, and beams that can be painted a color which contrasts with the slab to make the structure appear thinner. Disadvantages include: a typically higher cost than other structure types, more difficult fabrication and inspection, a longer fabrication time, the possible need for painting and future maintenance painting, weathering steel staining of supports, rusting of weathering steel when under salt exposure, and required annual inspections.

3) Cast-In-Place Concrete Slab Span

   This type of structure is used for shorter span bridges where depth is a major consideration. For simple spans conventionally reinforced, spans range up to 40 feet. Continuous spans are limited to about

60 feet. (See table in Section 5.3.1 of this manual for limits.) Advantages include: a minimum depth superstructure, ease of design and detailing, pleasing aesthetics, and economy for short span bridges. Disadvantages include: span lengths are limited, falsework is required, concrete delivery rate requirements may be a problem, a wearing course may be required to achieve a smooth ride, and the maximum skew angle is 45°.

4) Concrete Box Girder
Concrete box girders provide an attractive structure with high torsional resistance making them especially well suited for curved structures. The ability to accommodate an integral pier cap is an advantage since horizontal clearance is only required to the column top and not the cap top. Limitations and drawbacks include the need for falsework, the inability to redeck or widen, and the higher construction cost.

5) Timber
This bridge structure is used only on the local road system, for 1 or 3 spans with a maximum span length of about 25 feet. Advantages include: timber has a natural and aesthetically pleasing appearance, special equipment is not required for installation, and construction can be done in virtually any weather conditions. Disadvantages include: timber is not an economical structure type, it is limited to low-volume roads (roads with an ADT under 750), and the asphalt wearing surface tends to crack due to differential deck deflections.

6) Pre-cast Double Tee Beam Span
This bridge structure is used only on the local road system. The maximum span length is 48 feet for 22" depth stem, and a span length of 64 feet for 30" depth stem is typical. Advantages include: reduced construction time, reduced inspection time, and an economical pre-cast bridge in the 30 foot to 40 foot span range. Disadvantages include: not appropriate on steep grades, flared bridges, curved bridges, and skewed bridges of higher ADT roadways where salt is applied to the bridge.

7) Box Culvert
Box culverts provide a quickly constructed, and economical structure for stream crossings. Precast concrete box culvert standards are available for culverts up to 14 ft. x 14 ft. in size. Use of up to two large barrel boxes will be economical compared with a bridge. Advantages include: quick installation and low maintenance. Disadvantages include: span limitations, possible debris build-up

when multiple barrels are used, and lack of a natural stream for fish unless the invert is lowered and riprapped.

8) Three-Sided Bridge Structure
Three-sided precast concrete structures offer an alternative for short span structures up to 42 feet. Advantages include: quick installation, and a natural stream bottom. Disadvantages include: a higher cost than cast-in-place structures.

Abutment and Pier Locations

The following guidelines aid in setting abutment and pier locations:

1) Stream Crossings
For stream crossings the number of substructures in the stream should be kept to the minimum practical. Piers in streams block the natural flow of the waterway, trap ice and debris, impede navigation, and are subject to scour. In addition, construction of a stream pier is expensive (especially if cofferdams are needed), and environmentally disturbs the stream bottom and water quality. Piers and abutments should ideally be set on shore to minimize dewatering and allow easy access for the Contractor. Substructures should also be set to avoid interference with inplace substructures, including piling, wherever practical. Setting spans and structure depth involves balancing the hydraulic requirements of the low member elevation and waterway area with the constraints of approach grades, structure depth, and cost.

2) Grade Separations
For grade separations fewer piers are also desirable wherever practical. Piers should be kept out of the clear zone unless absolutely necessary. In locations where ramps enter or exit a highway under a bridge, piers should be avoided between the mainline and ramp, if possible, as they restrict visibility.

Abutment Types

Abutments can generally be classified as stub, semi-high or high abutments. A further breakdown of stub abutments can be made according to the way expansion is handled – integral (fixed) or parapet type.

Stub abutments with a standard berm were used extensively on four-span freeway overpass structures. Since the end spans are short there is no problem providing additional length for the berms, which provides extra protection for the abutment. The use of longer two-span structures for overpasses has diminished its use, but this abutment type is still used

where depth and spans will permit. The extra protection provided by the berm is especially important for stream crossings.

Semi-high abutments part way up the fill slope have become more popular as two-span overpasses have come into use. A higher abutment and elimination of the berm reduces the span length and depth of beam, which makes the structure more economical. From an aesthetic standpoint an exposed face greater than the depth of the beam and less than half the roadway clearance below the beams is desirable. Exposed heights of abutment face should be limited to about 8 feet, if possible.

High abutments at the bottom of the fill slope are used primarily in congested urban design where structure depth is critical. Their use is discouraged since they are difficult to construct, expensive, and give a closed-in feel to the highway.

Parallel wingwalls, parallel to the bridge roadway, are used most often for aesthetic reasons. An angled wingwall, 45 degrees for bridges with no skew, will give shorter wingwall lengths and less length of railing. These are used on some stream crossings where the elevation view of the bridge is not as prominent and the wingwalls help direct the stream flow under the bridge. Straight wingwalls, an extension of the abutment parapet, are the simplest to construct but are appropriate only for shallow beams where aesthetics is not a concern.

Guidelines for the use of integral and parapet abutments are given in Section 11 of this manual.

Pier Types

1) Stream Crossings

   Pile bent piers, consisting of a row of piles with a concrete cap encasing the pile tops, are the simplest and most economical type of pier. They are used for stream crossings where the maximum height from the top of pier to streambed is under 20'-0" and there is no ice or debris problem. Spans must also be short enough to allow a single row of piles to support the deck at reasonable spacing. The piles act as columns, and bending strength to resist side impacts from ice or debris is important. For cast-in-place piles (the most widely used) a 16" minimum diameter is required. If H-piles are used, the upper portion is encased by a cast-in-place pile shell filled with concrete. Timber piles are not permitted. Concerns with pile bent piers include the potential to trap debris, and its appearance.

A wall type pier, consisting of a single row of piles (especially H-piles) encased with concrete to form a wall, provides more resistance to ice and debris and allows debris to pass through without becoming entangled on the piles. This type of pier is used where more resistance to ice and debris than afforded by the pile bent is needed, and yet the size and expense of a solid shaft pier can be avoided. This type of pier can be constructed by driving the piling, supporting the wall forms on the stream bed, placing a seal with a tremie, dewatering, adding reinforcement, and pouring the wall.

A solid shaft pier is used for major stream crossings where heavy loads, tall piers or sizable ice and debris loads may occur. This type of pier has a separate footing located a minimum of 6'-0" below streambed. Construction of this type of pier involves driving sheeting to form a cofferdam, excavating inside the cofferdam, driving piles, pouring a seal, dewatering, and concrete placement.

2) Grade Separations

Piers at grade separations are typically multiple column type with a cap. Piers are visible to passing motorists and the emphasis on aesthetics has led to more use of rectangular shaped column type piers, often with form liner treatments or rustication grooves. For narrow ramp bridges a single shaft pier may be considered. Where aesthetics is not a concern, a round column pier will usually provide the lowest cost.

For bridges over railroads, piers located within 25 feet of the centerline of railroad tracks must either be of "heavy construction" (refer to Section 11.2.4 for requirements) or have crash walls. Piers located between 25 and 50 feet of the centerline of railroad tracks must be designed to withstand a 400 kip load unless they are protected as specified in LRFD 3.6.5.1.

For the majority of bridges over roadways, piers located within 30 feet of the roadway edge (defined as the edge of the lane nearest to the pier) must be designed to withstand a 400 kip load unless they are protected as specified in LRFD 3.6.5.1. See Section 11.2.4 of this manual for complete pier protection policy and requirements.

2.4 Final Bridge Plans and Special Provisions

The primary purpose for preparing the Final Bridge Plan and special provisions is to communicate the geometric, material, and procedural requirements for the construction of a bridge. Several audiences will use the final design or contract documents during the life of the bridge. Initially, contractors use the documents to prepare their bids. A clear, accurate, and complete set of documents will result in competitive bidding. Well-communicated information reduces contractor uncertainty regarding what is required for different elements of construction.

During construction, many parties will use the contract documents. For example, surveyors will locate and mark the position of working points, fabricators and construction engineers will prepare shop drawings and other submittals/drawings, inspectors and suppliers will use the documents for their work, and the contractor's forces will use the documents.

After construction of the bridge the detailed plans will be referenced when modifying the bridge (e.g., adding signage), performing load rating of the bridge, or rehabilitating/replacing the bridge.

The Final Bridge Plan contains geometric information, a schedule of quantities and pay items for the bridge, traffic phasing (if applicable), limits of removal of existing structures and foundation items (if applicable), foundation details, substructure details, superstructure details, typical sections, utilities (if applicable), survey information, and other miscellaneous items.

Specifications are also required for each project. They describe procedures for award and execution of the contract, how work will be measured and paid, procedures to be followed during execution of the work, and material and testing requirements for items incorporated into the project.

Bridge projects use specifications from four different sources:

1) Most of the specifications used for a project are provided in Mn/DOT's *Standard Specifications for Construction*. They are necessarily general in nature and are intended to cover all types of Mn/DOT projects.

2) The Bridge Office has assembled additional specifications. Because they are not included in the standard specifications they are called special provisions. A list of available bridge special provisions is provided in Appendix 2-B. Special provisions address a variety of work items, ranging from concrete placement in District 8 to the

fabrication and installation of pot bearings. Not all of the special provisions are intended to be used on every project; rather, designers should use only those applicable to the project.

3) The State-Aid Unit has additional bridge special provisions that apply to local road bridge projects.

4) Custom special provisions. If a work item is of such unique character that the standard specifications and the bridge special provisions don't describe or address the work, a custom special provision will need to be prepared. Custom special provisions may be generated for any number of items. Items may include schedules (e.g., dates the contractor will have access to certain portions of the project) or lists of required submittals, etc.

In general, information that is highly graphical or geometric in nature should be presented on plan sheets. Large amounts of information conveyed with text should be assembled in special provisions.

A specification or special provision usually contains the following five sections:
1) A description
2) A list of the materials used (and their specifications)
3) Construction requirements for the work
4) A description of how the work will be measured
5) The basis of payment (pay item for the work)

Oversight by the Federal Highway Administration (FHWA) is required for some bridge projects. See Section 2.3.1 of this manual under "Use of Preliminary Bridge Plans" for FHWA degree of oversight categories and plan submittal requirements.

2.4.1 Final Design Instructions

Unless specified otherwise within this manual, all structures shall be designed in accordance with the current AASHTO *LRFD Bridge Design Specifications*. For those few cases where LRFD specifications have not been created or adopted, the AASHTO *Standard Specifications for Highway Bridges* shall be used. These exceptions to the LRFD specifications include: long span specialty bridges and sheet piling. Discuss exceptions with the Bridge Design Engineer prior to beginning final design.

Railroad bridges shall be designed according to the current AREMA specifications for the live load specified by the railroad. Additional notes concerning the design of railroad bridges:

1) Railroad bridges will usually be designed with simple spans to avoid uplift from the live load.
2) Bridges for the Duluth Mesabe & Iron Range Railway require a special live load.

Plans and documents prepared during the preliminary design phase should be reviewed prior to beginning final design. These documents include:

1) Preliminary Bridge Plan
2) Bridge Construction Unit Foundation Recommendation Report
3) Design Study Report
4) Letter File

When reviewing preliminary plans, pay particular attention to geometry and utilities. Check the layout. This includes reviewing grades, stationing, end slopes, beams, railings, roadways, shoulders, and the median (if applicable).

2.4.1.1 Superstructure

Space beams so moments in fascia beams will not be larger than moments in interior beams.

2.4.1.1.1 Framing Plan

For steel beams and prestressed I-beams, deck projections beyond the centerline of the fascia beam should generally not exceed the smaller of:

1) Depth of beam
2) 40% of the beam spacing
3) 2'-8" plus one-half the flange width

The minimum slab projection beyond the tip of the flange shall be 6 inches.

For rectangular prestressed beams, the overhang is a concern when the location of a wheel line falls outside of the beam. Keep the maximum overhang projection beyond the centerline of the fascia beam to approximately 2'-8".

2.4.1.1.2 Concrete Wearing Course

For bridges with reinforced concrete decks, the deck may be cast in one or two lifts. If two lifts are used, the second one is called the wearing course and is placed during original construction of the bridge. Note that the wearing course and the future wearing course are separate and distinct items.

The wearing course shall be low slump concrete. Bridges meeting any of the following criteria shall use a concrete wearing course:

1) All bridges carrying interstate traffic.
2) All interstate highway bridges at an interchange with access to the interstate.
3) All bridges carrying trunk highway traffic in major metropolitan areas and municipalities with populations of 5000 or greater.
4) All bridges on highways with 20-year projected ADT greater than 2,000.

The State Bridge Engineer shall determine the appropriate action on any individual exceptions to this policy.

2.4.1.1.3 Diaphragms and Cross Frames

In most bridges, the orientation of the primary superstructure elements is parallel to the centerline of the bridge. Aside from slab bridges, most bridges in Minnesota are supported on multiple beam lines. The beam lines are typically spaced on 5 to 15 foot centers. These bridges usually have diaphragms or cross frames. They serve a number of purposes:

1) They provide compression flange bracing during erection and construction of the bridge.
2) They increase lateral load distribution (more beams or girders participate in carrying live loads).
3) They provide a load path for lateral loads to be carried from the deck to the bearings.

During final plan assembly, specify the type of diaphragm on the framing plan, the deck cross section, and the longitudinal section.

For bridges with integral abutments, the end diaphragm also functions as an abutment element. Provide a construction joint between the end diaphragm and the approach panel to accommodate settlement under the approach panel. To facilitate the transfer of axial load from the deck into the end diaphragms, provide a concrete fillet as shown on Details B809 and B811.

2.4.1.2 Pedestrian Bridges

Pedestrian bridges shall be designed in accordance with the *Guide Specifications for Design of Pedestrian Bridges*. Several additional constraints are placed on pedestrian bridges to ensure they are accessible, safe, and durable:

1) The standard width for pedestrian bridges is 8'-0". This dimension is from face of handrail to face of handrail. Bridges carrying bicycle traffic shall be 2'-0" wider than the approaching bikeway width with a maximum width of 12'-0".
2) The maximum grade permitted on a pedestrian bridge is 8.33%. A grade flatter than the maximum is preferable. When the grade is steeper than 5%, a 5'-0" platform shall be provided for each change in elevation of 2'-6".
3) Protective screening, preferably a chain link fence system or a railing system, must be placed on both sides of the bridge. The height of the fence or railing must be 8'-0" above the top of the sidewalk. For sites with special aesthetic treatments involving ornamental railings, a minimum height of 6'-0" will be allowed.
4) A 6'-0" clear platform shall be provided at the bottom of each ramp.
5) A platform shall be provided at each abrupt change in a horizontal direction. The minimum plan dimension of a platform is 5'-0" by 5'-0".
6) The profile grade should be laid out such that there are no abrupt grade breaks at expansion devices.
7) Only in the rare case where handicap accessibility need not be provided can stairs be incorporated into a design. When stairs are provided, use the following guidelines:
   a) Stairs shall have a 1'-0" tread and a 6" rise.
   b) Adjust the sidewalk or superstructure elevations to make all risers 6" tall.
   c) The preferred number of risers in a flight of stairs is 14 to 16. The maximum number is 19.
8) The rails shall be detailed with regard to the following:
   a) Pedestrian railings must be at least 3'-6" in height.
   b) Bicycle railings must be at least 4'-6" in height.
   c) For pedestrian bridges over roadways, the opening between elements of a pedestrian railing shall not permit a 4" sphere to pass through.
   d) For pedestrian bridges that are not over roadways, the opening between elements of a pedestrian railing shall not permit a 4" sphere to pass through the lower 27" of the railing. A 6" sphere shall not be able to pass through any opening above 27".
   e) Handrails shall be placed 2'-8" above the top of the deck.

9) Provide an electrical ground for continuous chain link fences, ornamental railings, and metal handrails. If appropriate, provide bicycle ramps on pedestrian bridges that contain stairs.

Materials

The superstructure of a pedestrian bridge shall be steel, prestressed concrete, reinforced concrete, or timber. Aluminum is not an acceptable material for use in any portion of the superstructure.

The minimum structural steel thickness is $^{1}/_{4}$ inch for pipe or tube sections and $^{5}/_{16}$ inch for all other sections. The minimum thickness requirements do not apply to railings. Details associated with structural tubing shall be watertight or designed such that moisture cannot be trapped in or on the member to accelerate corrosion.

The concrete for the deck of a pedestrian bridge shall be Mn/DOT Mix No. 3Y33 or 3Y33A.

The Brazilian hardwood known as IPE, though very durable, is not an accepted decking material on state or federally funded projects. If the use of IPE wood is desired by the owner, it shall be paid for by local funds.

Bridge Substructure

The bridge substructure shall be reinforced concrete supported on piling or spread footings as recommended in the Bridge Construction Unit Foundation Recommendations report. Incorporate drainage systems (Details B910 or B911) into the abutments as needed.

Bridge Superstructure

Bearing assemblies shall be elastomeric pads or masonry plates. All other types will require approval by the Bridge Design Engineer.

To limit transverse deck cracking due to negative flexure, provide additional longitudinal bars in the top of the deck over the piers. Stagger the ends of the additional longitudinal bars to transition the capacity of the section. (See Figure 9.2.3.5.)

Detail anchorages for the piers and abutments to resist uplift and overturning forces associated with wind loads.

Provide a cover plate over all pedestrian bridge expansion joint openings to protect pedestrians from a tripping hazard.

Type 5.0 strip seals with expansion joint openings up to 5.0 inches are allowed on pedestrian bridges since the joint is concealed by a cover plate.

Highway Geometrics

A pedestrian bridge over a roadway shall meet Mn/DOT design standards for horizontal and vertical clearances.

2.4.1.3 Temporary Bridges and Widenings

Temporary Bridges

Temporary bridges are used to detour traffic while removal of an existing bridge and construction of a new bridge occur on the mainline of the roadway. The superstructure consists of a glue-laminated wood panel deck on steel or prestressed beams. Substructures typically are pile bent structures with steel pile caps.

Design temporary bridges in accordance with the LRFD Specifications using the HL-93 live load with an associated load factor of 1.75.

The posted speed for work zones is 45 mph. Per LRFD 13.7.2, design the railings, the railing/deck connection, and the deck overhang on temporary bridges to meet railing Test Level 2.

Temporary Widenings

Temporary widening occurs when staging requires widening of an existing bridge while construction of an adjacent new bridge occurs.

Design structural components of the temporary widening to meet or exceed the capacity of the existing bridge components. The deck material of the widening shall match the deck material of the existing bridge.

For temporary widenings, design the railings, the railing/deck connection, and the deck overhang to meet the railing test level required for the roadway.

2.4.1.4 Bridge Approaches

In most cases, the bridge approach panel will be included with the roadway grading plans for a project. For situations where approach panel details can't be wrapped into roadway plans, guidance for the treatment and details of approach panels can be found in the following:

Bridge Approach Treatment
The approach treatment standard sheets describe the limits and treatment of excavation and backfill near the abutments. These sheets are found in the *MnDOT Standard Plans Manual*, Figures 5-297.233 and 5-297.234.

Bridge Approach Panel
The standard sheets covering bridge approach panels are found in the *MnDOT Standard Plans Manual*, Figures 5-297.223 through 5-297.232. These figures cover standard approach panels for abutments with joints, abutments without joints, abutments with different amounts of skew, different mainline pavement types, and miscellaneous details. A special design for approach panels is required when a bridge has a skew angle equal to or greater than 45°.

Specify a concrete wearing course on approach panels when the bridge deck has a concrete wearing course. The wearing course on the approach panels will be placed at the same time as the wearing course on the bridge. Include the approach panel wearing course quantity in the summary of quantities for the superstructure. When using integral abutments, provide approach panel detail to roadway design for inclusion into the roadway plans.

2.4.1.5 Survey

When assembling the survey sheets for final plans, verify that the most current grading plans are being used.

The final design survey sheets should contain the centerlines and object lines for the abutment and pier footings. All test piles should be identified and located.

2.4.1.6 Utilities

The Bridge Office Utilities Unit determines if provision must be made for lighting (roadway, navigation, inspection, etc.), signing, signals, utilities, etc.

2.4.1.6.1 Suspended Utilities

The conduit for utilities is to be suspended below the deck on hanger systems between the beams. Locate the entire conduit and hanger system above the bottom of the beams and generally below the

diaphragms or in the lower openings of a cross frame diaphragm. To minimize the impact to the structure in the future, avoid casting conduits for utility companies in the deck, sidewalk, or rail.

Roadway lighting conduit ($1^1/_2$ inch diameter maximum) will be allowed in rails and sidewalks.

When conduit is embedded in concrete rail, deck, or sidewalk, use a combination expansion/deflection fitting at the abutments. This will accommodate horizontal movements (due to temperature change, creep, shrinkage, etc.) and vertical movements (due to jacking operations for bearing replacement, etc.).

For hanging systems, only an expansion fitting is required at the abutments. Hangers and conduit can accommodate vertical deflection (due to superstructure jacking) at the abutment. Lateral bracing of conduit is needed only for fiberglass conduit. The temperature movements of rigid steel conduit approximate those of concrete. Consequently, lateral bracing is not needed. Choose a transverse spacing for the conduits that permits proper placement of concrete between embedded anchors.

2.4.1.6.2 Buried Utilities

To protect structures, restrictions on the location of new or existing buried utilities and drainage pipes must be considered near bridge and wall structures supported on spread footings. Location restrictions, installation techniques, protection measures, and review of plans for these utilities are required within 50 feet laterally, 50 feet below, and 15 feet above the base of spread footing foundations. Utility installation in this region requires review and approval of the MnDOT Bridge Office. Additional restrictions on the location of utilities may be specified in other documents relevant to the project. The most restrictive requirements apply to the placement of utilities.

Within this region, three zones have been identified to provide general guidance for MnDOT approval. See Figure 2.4.1.6.2.1 for definition of the different zones. For purposes of this section, utilities are defined as any utility requiring a permit as well as State owned utilities and stormwater structures. Dry utilities are defined as facilities that do not carry fluid, examples include power and telephone. Wet utilities are those facilities that carry fluid, but do not include roadway edge drains or subsurface drains associated with the bridge or wall structure.

All wet utilities in zones 1, 2, and 3 require gasketed pipe or joints designed to prevent leakage due to pressurized flow. Casing, where

required, will meet MnDOT requirements for casing. Refer to the *MnDOT Policy Statement on Accommodation of Utilities on Highway Right of Way* for casing requirements. The following constraints for utilities in any of the three zones describe requirements for parallel installations, skewed, and perpendicular crossings.

The restrictions on utility placement are dependent on their position relative to the structure.

Zone 1

During the construction of a new footing, utilities are to be placed outside of zone 1 when possible. If relocation is impractical or impossible, the requirements for locating utilities in zone 1 are as follows:

- New utilities to be installed and existing utilities to remain in place require Bridge Office approval.
- However, no new wet utilities may be placed longitudinally (i.e., parallel to the substructure or wall) in zone 1 of a new or existing footing.
- New utilities may be placed transversely (i.e., perpendicular to the substructure or wall) to the structure in zone 1 of an existing footing, with Bridge Office approval of proposed design and construction sequencing.
- All pipes and conduits must be designed for any surcharge loading due to structure bearing pressures and possible resulting deformations.
- All wet utilities must be cased in zone 1; if facilities are too large or cannot be cased effectively, a site specific design is required.
- Utility owners may choose to case dry utilities to allow for future maintenance or access; however, casing is not required for dry utilities.
- Future open trench excavation is prohibited in order to protect the footing from potential undermining. Other forms of excavation may be permitted in this zone with Bridge Office approval.

Zone 2

The requirements for locating utilities in zone 2 are as follows:

- New utilities may be installed in zone 2.
- Excavation for maintenance or replacement will be permitted with proper sheeting and shoring; no unbraced open cuts will be allowed.
- Any utilities installed in zone 2 must follow the same casing requirements as in zone 1, with the exception of stormwater facilities.

- Encasement is required for stormwater pipes with velocities greater than 10 fps, or pipe diameters 54 inches and larger, or pipe materials other than those shown in Standard Plate 3006. Other stormwater facilities need not be cased in zone 2 unless required by contract specifications or as recommended by the Bridge Office.

Zone 3

There are no restrictions for utility installations in zone 3 except for the requirement to use gasketed pipe as needed for wet utilities.

If these conditions cannot be met, options include relocation or replacement of the utility or placing the substructure on deep foundations. However, pressurized wet utilities placed in zone 1 must be cased due to the risk of significant soil loss. In lieu of casing, a risk analysis approved by the Regional Bridge Construction Engineer is acceptable for substructures on deep foundations.

Certain types of utilities may pose a significant risk to shallow foundations when placed in zones 1, 2 or 3. If these types of utilities were to fail, the shallow foundation would be at risk of failure due to the loss of material from localized scour or erosion. The determination of high risk utilities will be made on a case by case basis by the Bridge Office and will be based on many factors including, but not limited to utility location, flow pressure, flow rate, structure size, and utility size. Additional restrictions to the ones contained in this document could be applied to utilities that pose a significant risk to the foundations.

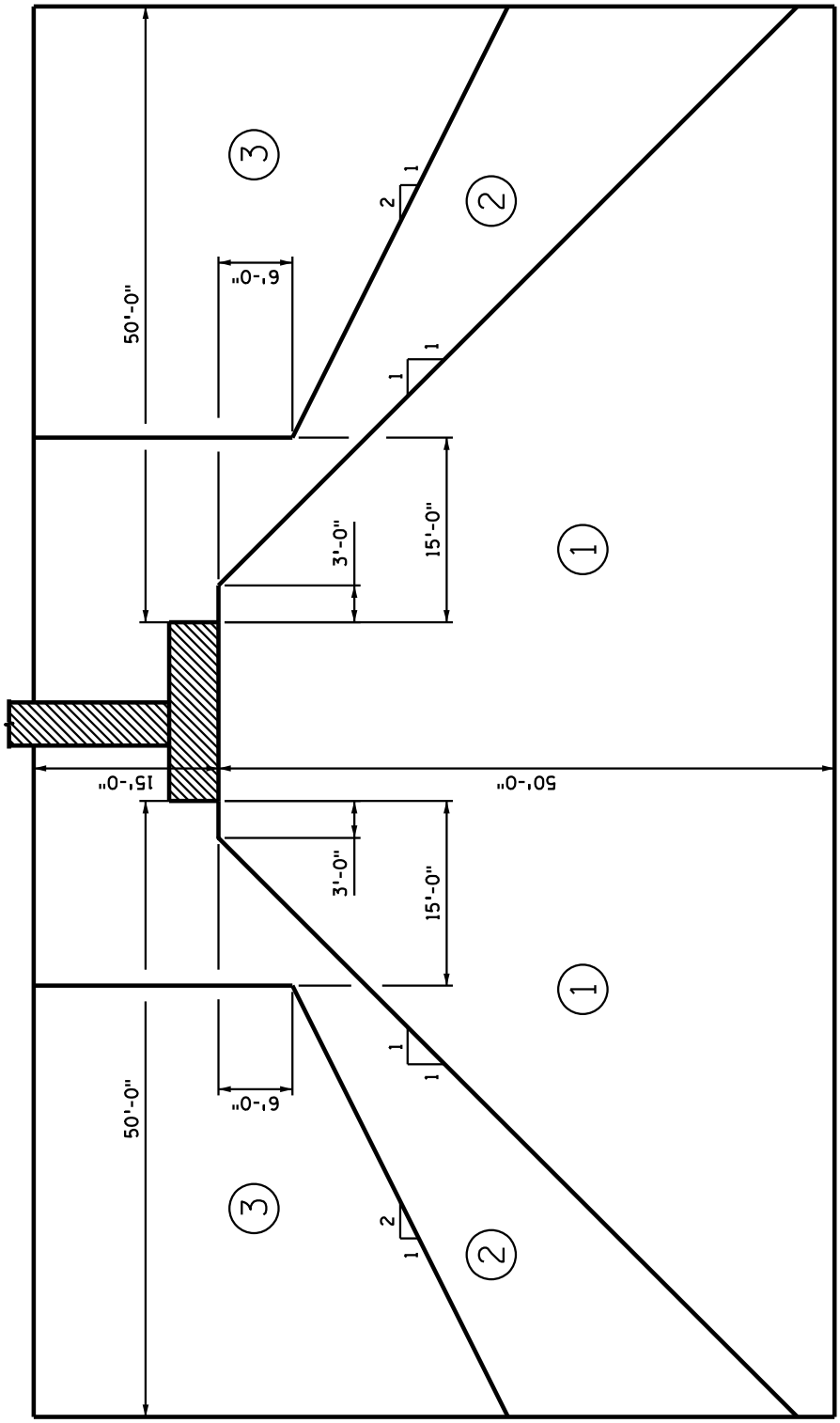

Figure 2.4.1.6.2.1
Utilities Near Shallow Foundations

[This Page Intentionally Left Blank]

2.4.1.7 Precedence of Construction Documents

Designers, while striving to produce accurate error-free construction documents, may at times end up with documents that have conflicting content. A hierarchy has been established to determine which content is governing for a project. In general, the more project specific the document, the higher the document's position in the hierarchy. Section 1504 of the *Standard Specifications for Construction* describes the precedence of construction documents for a project:

> In case of discrepancy, calculated dimensions will govern over scaled dimensions; Special Provisions will govern over Standard and supplemental Specifications and Plans, Plans will govern over Standard and supplemental Specifications, and supplemental Specifications will govern over Standard Specifications.

2.4.1.8 Design Calculation Requirements

Office practice is to permit the limit states to be exceeded by a maximum of 3%. However, caution should be exercised to ensure that a 3% exceeded limit state at a particular location does not adversely affect the structure load rating.

2.4.2 Final Plans

The plan order shall typically follow this list:

- General Plan, Elevation, Cross section
- Pay Items
- Staging Plan
- Working Point Layout
- Removal Details
- Abutment Details and Reinforcement
- Pier Details and Reinforcement
- Framing Plan
- Beam Details
- Superstructure Details and Reinforcement
- Plan Details (Railing, Expansion Joint, Slope Paving, Conduit, etc.)
- B-Details
- As-Built Bridge Data
- Surveys, etc.

When presenting geometric information, enough baseline information needs to be provided to permit others to verify the information presented. For example, the top of roadway elevations presented on a bridge layout sheet can be confirmed by others using vertical curve information on the general elevation and the cross slopes provided on the typical transverse section.

In general, the same dimensions should not be presented several times. Providing dimensions in multiple locations increases the chance that not all dimensions will be updated as changes occur during the design process.

The clarity of the details used in plan sets should be a primary concern of designers. Only the simplest details should combine the presentation of concrete geometry and reinforcement. In most cases there is less confusion if two details are used, one to convey concrete geometry and a second to identify and locate reinforcement.

All sheets (except survey sheets) shall show the initials of the individuals responsible for the design, drafting, design check, and drafting check of each sheet. Similarly, all sheets (except survey sheets) must be certified by a Professional Engineer licensed in the State of Minnesota.

If plan sheets containing standards (Standard Bridge Details Part I and Part II, or Bridge Standard Plans) are changed (other than simply filling in blanks), place the word "MODIFIED" under the B-Detail or Figure Number. Also add a box containing a note which states what was modified to help plan readers quickly locate them.

In most cases, details are presented with stationing increasing as one moves from the left side to the right side of the sheet. Always include a north arrow on plan views. Plan views are typically oriented with north arrows pointing toward the top or to the right of the sheet. Stationing increases for northbound and eastbound traffic.

2.4.2.1 Drafting Standards

The Bridge Office has adopted standards to be used when drafting plan sheets. Download *Summary of Recommended Drafting Standards* from the link (Mn/DOT CADD Requirements and CADD Resources) posted at: http://www.dot.state.mn.us/bridge/.

2.4.2.2 Drafting Guidelines

Sheet Layout and Continuity

Read plans from a contractor's perspective to check that they contain all information needed to build the bridge. Make sure enough dimensions are given for constructibility. Use extra details for uncommon work. Use perspective views when clarity is needed.

Use sheets efficiently. Balance the drawings on sheets to avoid one sheet being empty while another is crowded. Use additional sheets, as needed, to avoid crowding details on sheets. Make sure that details,

data, and other information given on more than one sheet agree between sheets. Avoid unnecessary repetition of details and notes.

Large-scale corner details are required for all skewed bridges and for other complex corners.

Round dimensions to the nearest $^1/_8$ of an inch.

Note and dimension bar splices.

Cross-referencing sheets to details is recommended.

Use bill of reinforcement tables for all but very minor reinforced concrete work. Do not enlarge details (such as rebar bends) just to fill up space. Referencing bar bend details by letter to various generic shapes should never be used.

Keep details together for abutments, piers, superstructure, etc.

For abutments, piers, and other complex drawings, use different views and sections to separate dimensions and reinforcement.

Place pile design loads and notes pertaining to a particular substructure on the sheet that contains the footing plan view.

For bridges with numerous footings and curved alignment, a separate foundation layout drawing is recommended.

If the plan contains numerous variable dimensions and other data (especially for framing plans and beams), make use of tables to keep this data in order.

On the Framing Plan, show bearing type beside each bearing point instead of lines and arrows, which tend to clutter the drawing.

For simple beam spans (prestressed beams, etc.), dimension beam spacing at pier cap along centerline of the pier(s). Include supplemental dimensions along centerline of bearing for curved and flared structures.

On jobs with staged construction, use enough drawings to clearly indicate how the bridge construction is to be coordinated with the staging. Keep structure units together. Reinforcement and quantity tabulations are to be split between stages.

On rehabilitation jobs, clearly indicate cut lines and extent of all removals. If there is a saw cut, be sure to use a straight line (WT=5). If elevations are taken off original plans, note as such and require the contractor to verify elevations in the field.

When it appears that plan notes, such as procedure descriptions, specifications, etc., will become excessively wordy relegate these notes to the special provisions.

List general notes first and specific numbered notes last. Specific detail notes should be numbered with circles and referenced to the detail to which they apply. Place all notes together on the right hand side of the sheet.

Leave extra lines in the Summary of Quantities and Bill of Reinforcement for additions. Also, leave extra space in the list of notes.

Use the words "will" and "shall" correctly. "Will" refers to the portion of work to be performed by the owner (Mn/DOT). "Shall" refers to the portion of work to be performed by the Contractor. "Shall" may also be thought of as a directive to the Contractor.

Pay Quantities

Make computations neat and readable. Strive for continuity. These computations may be needed for future reference and the reader must be able to interpret them.

Box in or underline computation totals for quicker take off. Initial, date, and put the bridge (or job) number on every computation sheet.

Two sets of independently worked quantity computations are required for each pay item.

Arrange design and quantity computations into a neat and orderly package.

2.4.2.3 General Plan and Elevation

The General Plan and Elevation sheet is intended to summarize the primary features and horizontal geometry of the bridge. Figure 2.4.2.3.1 shows an example General Plan and Elevation sheet and Figure 2.4.2.3.2 shows a Typical Cross Section sheet with pay items.

Plan

On the plan view identify the following: working points, working line, centerlines, bench mark disks, utilities, location of inplace bridges or substructures, ditch drains, deck drains, lights, and name plate. Label the following: span lengths, deck width, size of angles between the working line and centerlines, horizontal curves, minimum horizontal clearance to substructure units, point of minimum vertical clearance for each roadway under the bridge, extent of slope protection, roadway stationing and elevations, and distance between twin bridges. Provide a north arrow. Tie bridge dimensions to working points. Show the direction of traffic for each design lane.

Elevation

Present the primary vertical geometry of the bridge on the elevation view. This consists of vertical curve data, end slopes, existing ground lines, footing elevations, limits of excavation, grading notes, ditch clean out along railroad tracks, and scale. Label bearings as fixed, expansion, or integral. Also label piers, spans, abutments, and slope protection.

For bridges over waterways, hydraulic information must be provided. Required information includes: channel bottom width, low member elevation, design high water elevation, and assumed flowline elevation.

For grade separation bridges, provide the minimum vertical and horizontal clearances. In addition, provide the dimension from centerline of pier to toe of slope protection. If there is no side pier, give the dimension from toe of slope to centerline of roadway. Dimension the pier, lane, and shoulder widths on the roadway under. Lane slopes on the roadway under are typically omitted, but can be provided if space permits.

When illustrating slope protection use a straight slope line; do not follow the ditch radius curve. To reduce confusion concerning slopes, do not show slopes as 1:2. Many individuals are unsure of whether the first or second number is the horizontal part of the slope. Show the slopes graphically. Where slopes need to be provided in text, explicitly call out the slopes (e.g., 1 vertical to 2 horizontal).

Typical Cross Section

The typical cross section is the third general view of the structure. Combined with the general plan and elevation views, the primary geometry of the bridge should be conveyed. On the typical cross section show transverse bridge dimensions, lane widths and slopes, beam depth and spacing for all spans, roadway slab and concrete wearing course thicknesses, type of railing, medians, sidewalks, profile grade location, working line, and all centerlines.

For staged construction projects, include the inplace, interim, and final cross sections with anchored safety barrier locations.

For complex projects, consider creating a separate plan sheet for pay items and notes for clarity.

Utilities

Show all utilities that may affect bridge construction. Note what is to be done with them (will they be moved, will they no longer be used or do they need to be protected during construction).

Miscellaneous

Provide a Design Data block on the General Plan and Elevation Sheet of the bridge plan set. The information given in the block provides a summary of the primary parameters used for the design. Information in the Design Data block includes: design specifications, design method, design live load, design material strengths, future wearing course assumed in the design, deck area, traffic data, and the operating rating for the new structure.

Also on this sheet, identify the governing standard specifications for construction. Show a north arrow on the plan view and include a block for engineering certification. Present applicable project numbers on the first sheet; project numbers depend on specific funding sources, so there may be both state and federal project numbers.

Review the title block to ensure it accurately describes the bridge. Within the title block provide span lengths to the nearest foot and the bridge type identification number. The three-character identification number should follow the numbering scheme provided in Appendix 2-A.

Include any additional standard construction notes and the sheet list for the plan set on the first sheet of the plan set. Provide the schedule of quantities for the entire bridge in tabular form on the second or third sheet of the plan.

Standard practice for placement of bench marks and bridge nameplates is as follows:

Place a single nameplate on the southeast corner of the bridge for a roadway running north and south. For a roadway running east and west, provide the nameplate at the northeast corner. On twin bridges place a nameplate on each right hand corner approaching bridge. For railroad and pedestrian bridges, place the nameplate on a substructure unit. On bridges that are widened, redecked, or that receive rail modifications that result in additional roadway width, install a new nameplate with the original year completed and the year renovated.

Place a bench mark disk on the southeast corner of each bridge. If the bridge is over 250 feet in length, or if there is an elevation difference of more than 10 feet, place a second bench mark disk on the bridge. Place the second disk in the northeast corner for roadways running north and south and in the southwest corners for roadways running east and west.

Check if ditch drainage pipe is necessary for the project. If drainage pipe is necessary and the contract has multiple portions (grading, bridge, etc.), identify which portion of the contract contains the pipe. Label ditch drainage pipe on plan and elevation views.

Concrete or aggregate slope protection is used along a highway or railway (grade separation structures). Aggregate slope protection is used more frequently when pedestrian traffic below the bridge is limited. Stream crossings use riprap slope protection supported on a granular or geotextile filter. The Preliminary Bridge Plan will indicate the type of slope protection to be used.

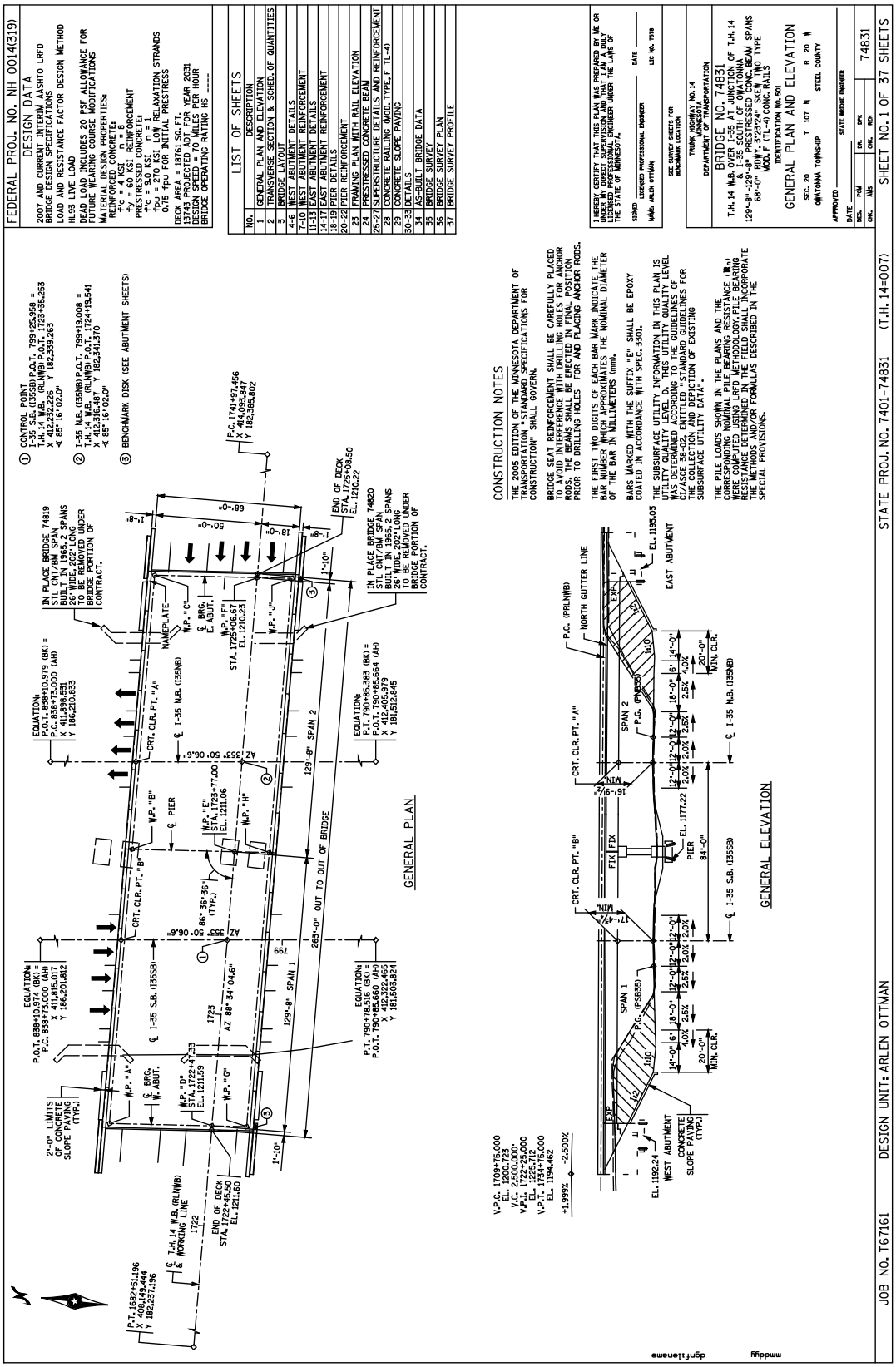

Figure 2.4.2.3.1
General Plan and Elevation

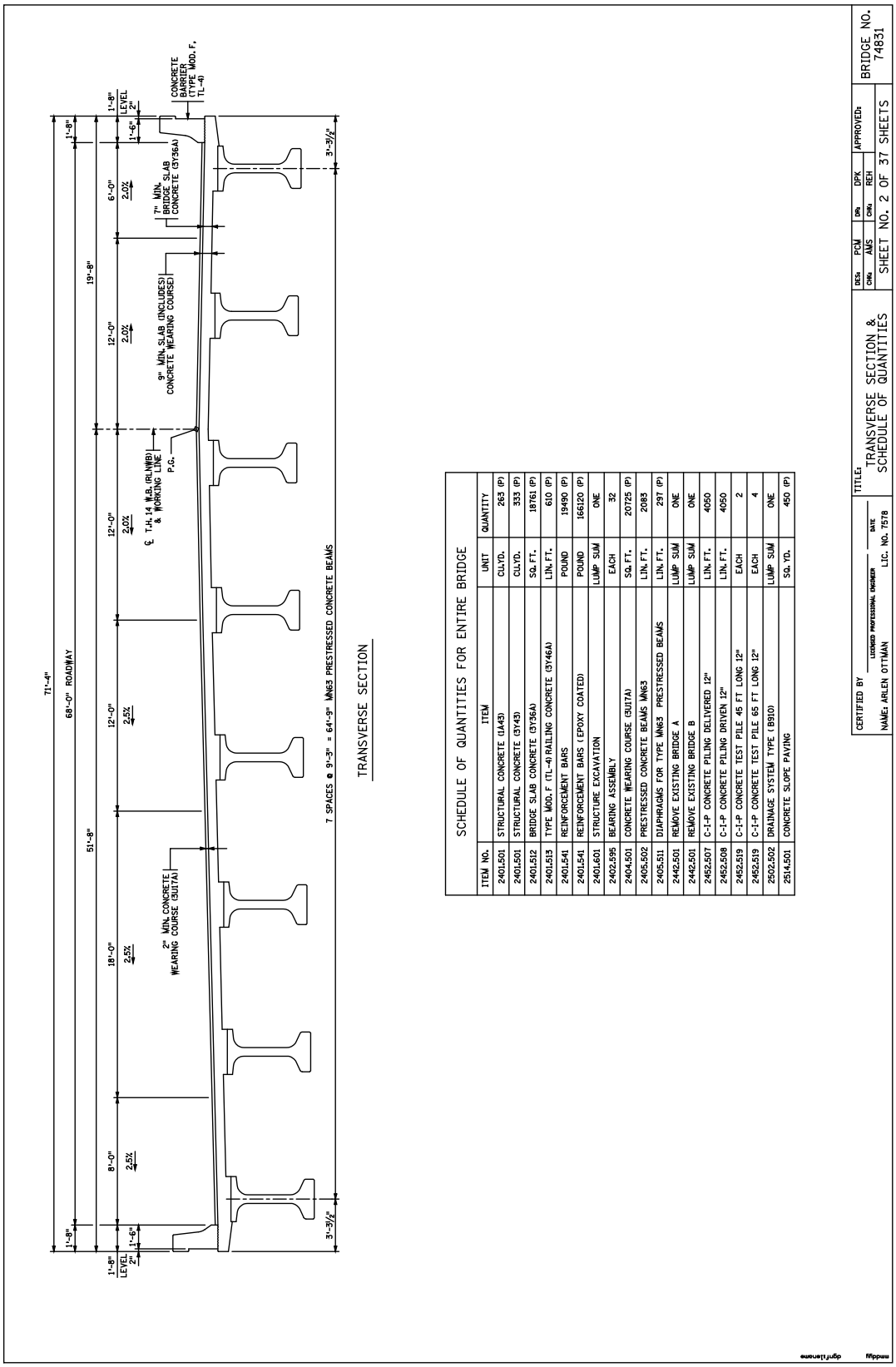

TRANSVERSE SECTION

SCHEDULE OF QUANTITIES FOR ENTIRE BRIDGE

ITEM NO.	ITEM	UNIT	QUANTITY
2401.501	STRUCTURAL CONCRETE (1A43)	CU.YD.	263 (P)
2401.501	STRUCTURAL CONCRETE (SY43)	CU.YD.	333 (P)
2401.512	BRIDGE SLAB CONCRETE (SY36A)	SQ. FT.	18761 (P)
2401.513	TYPE MOD. F (TL-4) RAILING CONCRETE (SY46A)	LIN. FT.	610 (P)
2401.541	REINFORCEMENT BARS	POUND	19490 (P)
2401.541	REINFORCEMENT BARS (EPOXY COATED)	POUND	166120 (P)
2401.601	STRUCTURE EXCAVATION	LUMP SUM	ONE
2402.595	BEARING ASSEMBLY	EACH	32
2404.501	CONCRETE WEARING COURSE (SUT7A)	SQ. FT.	20725 (P)
2405.502	PRESTRESSED CONCRETE BEAMS MN63	LIN. FT.	2083
2405.511	DIAPHRAGMS FOR TYPE MN63 PRESTRESSED BEAMS	LIN. FT.	297 (P)
2442.501	REMOVE EXISTING BRIDGE A	LUMP SUM	ONE
2442.501	REMOVE EXISTING BRIDGE B	LUMP SUM	ONE
2452.507	C-I-P CONCRETE PILING DELIVERED 12"	LIN. FT.	4050
2452.508	C-I-P CONCRETE PILING DRIVEN 12"	LIN. FT.	4050
2452.519	C-I-P CONCRETE TEST PILE 45 FT LONG 12"	EACH	2
2452.519	C-I-P CONCRETE TEST PILE 65 FT LONG 12"	EACH	4
2502.502	DRAINAGE SYSTEM TYPE (B910)	LUMP SUM	ONE
2514.501	CONCRETE SLOPE PAVING	SQ. YD.	450 (P)

CERTIFIED BY _____ LICENSED PROFESSIONAL ENGINEER _____ DATE
NAME: ARLEN OTTMAN LIC. NO. 7578

TITLE: TRANSVERSE SECTION & SCHEDULE OF QUANTITIES

DES: PCM DRN: DPK APPROVED:
CHK: AMS CHK: REH
SHEET NO. 2 OF 37 SHEETS

BRIDGE NO. 74831

mmdd/y dgn:filename

Figure 2.4.2.3.2
Typical Cross Section

2.4.2.4 Bridge Layout and Staking Plan

The Bridge Layout Sheet is used by surveyors to locate the bridge in space with its primary geometry. The primary geometry consists of centerline of roadway(s) and centerline of substructure bearings. Working points are located on substructure bearing centerlines where they are intersected by fascia beam lines and working lines. By providing stationing, X-coordinates, and Y-coordinates for each of the working points, the position of the bridge can be fixed. Figure 2.4.2.4.1 contains an example.

In Figure 2.4.2.4.1 the working line and its azimuth are labeled. Also shown is the angle of intersection between the working line and each of the substructure units and roadways under the bridge. As a primary geometry line, the working line should be labeled throughout plan set.

Place the control point at the intersection of the survey line and centerline of cross road, track etc. For river crossings, place the control point at an abutment centerline of bearing. Label the control point with its coordinates. Coordinates of the control point and the working points should be given to three decimals of a foot. Tie the working point layout to the control point. Present dimensions in feet (a note on the sheet should say the same).

List the coordinates for all working points in a table labeled "DIMENSIONS BETWEEN WORKING POINTS". Stations and the distances between working points should be presented to the nearest 0.01 foot. Coordinates are assumed to be State Plane coordinates. If another system is used, place a note on the sheet identifying the system used.

In addition to horizontal geometry, a limited amount of vertical geometry is provided on the Bridge Layout Sheet. The vertical geometry consists of elevations and drops. The elevation at the top of roadway and the bridge seat is provided for all working points located on beam lines and is appended to the "DIMENSIONS BETWEEN WORKING POINTS" table.

Drop or elevation difference information is provided for each substructure unit. Drop information is summarized in the "TOP OF ROADWAY TO BRIDGE SEAT" table. The table should contain the following items:

1) Deck Thickness
2) Stool Height
3) Beam Height
4) Bearing Height
5) Total Height

If the drop dimension is the same for all beam lines, provide a single value for each substructure unit. If the drop dimensions vary at substructure locations, provide a value for each beam line. Total values should be given in both inches and decimals of a foot to two places.

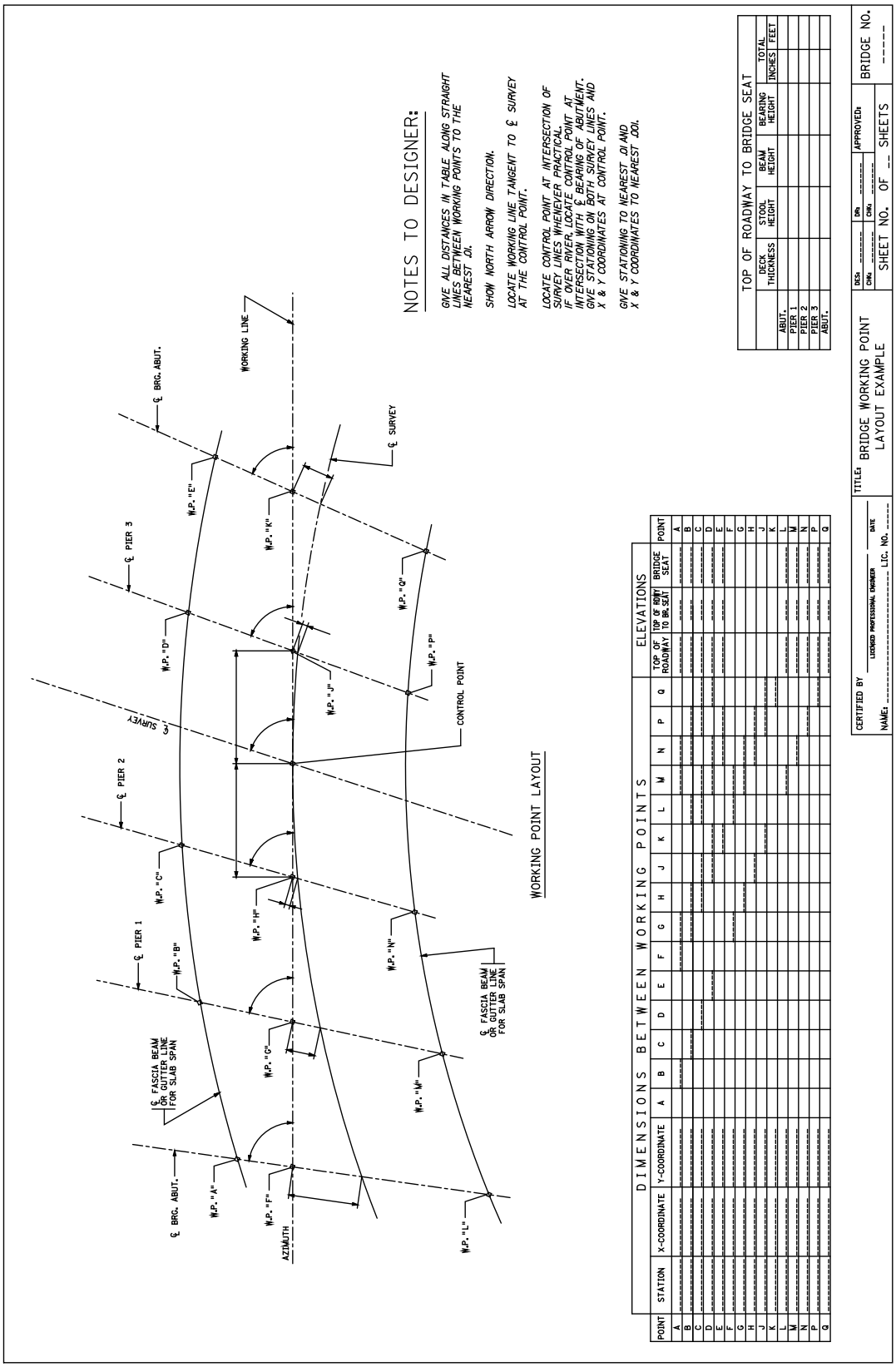

Figure 2.4.2.4.1
Bridge Layout

2.4.2.5 Standard Abbreviations

Use standard abbreviations to clarify information on plan sets and reduce the clutter on a crowded plan sheet. Appendix 2-C presents a list of standard abbreviations that can be utilized in a plan. Define abbreviations used in a plan set on the sheet where they are used or as part of a General Notes sheet.

2.4.2.6 Inclusion of Standard Bridge Details in Plan Sets

There are two parts to the Bridge Details: Part I and Part II. They have been published on the Bridge Office Web site at: http://www.dot.state.mn.us/bridge/ . Bridge details are intended, where applicable, to be incorporated into a set of bridge plans. The Bridge Details Part I is usually called B-Details. The details are presented in a "portrait" orientation on an 8 1/2" x 11" sheet. Available B-Details are listed in Appendix 2-D. The 100 series contains nameplate details, the 200 series has pile splices, the 300 series has bearing details, and the 400 series has a variety of steel superstructure/diaphragm/cross frame details. A slab protection plate is provided in Detail B553. The 700 series contains floor drain details and the 800 series contains joint/diaphragm/railing details. Miscellaneous details are collected in the 900 series.

Bridge Details Part II is listed in Appendix 2-E. These details occupy an entire plan sheet. The majority of these details are for railings, parapets, medians, and prestressed concrete beams.

2.4.2.7 Use of Bridge Standard Plans

Similar to Bridge Details Part II, Bridge Standard Plans are intended to be incorporated into bridge plan sets and occupy an entire plan sheet. The information presented may be much more in-depth as the information for multiple designs is presented on a single sheet. An example is retaining walls; designs for a number of retained earth heights are presented on a single sheet.

Bridge Standard Plans consist of culverts and retaining walls. Appendix 2-F lists available culvert standards. Retaining wall standards are listed in Appendix 2-G.

2.4.2.8 Standard Plan Notes

Similar to other plan elements, standard plan notes have been prepared to increase the consistency of information presented on final design plans. Plan notes serve a variety of purposes; they communicate design criteria, specific construction requirements, and a variety of notes pertaining to the construction or fabrication of specific bridge elements.

Appendix 2-H contains the Standard Plan Notes. These notes have been grouped into the following categories:

- Design Data
- Construction Notes
- Drainage and Erosion Control
- Excavation and Earthwork
- Reinforcement
- Piling and Footings
- Materials, Fabrication and Erection
- Concrete Pours
- Welded Steel Bearing Assemblies
- Cutting and Removal of Old Concrete
- Joints and Joint Sealer
- Timber Bridges
- Miscellaneous

Designers unfamiliar with Mn/DOT's Standard Plan Notes should review the list prior to beginning final design. Reviewing the notes prior to design will familiarize designers with the material properties to be used, and other constraints typically placed on construction. A second review of the notes should be performed at the end of design to ensure that all applicable notes were incorporated into the plan set.

2.4.2.9 Quantity Notes and Pay Items

Standard Summary of Quantities Notes

During construction, contractors are compensated according to the work they complete. The value of the work completed is identified when the contractor submits their bid. For each work item or pay item the contractor must supply a price. The pay items are coordinated with specifications and special provisions. To clarify what is included in a specific pay item, the Bridge Office has assembled a Standard Summary of Quantity Notes. Like other plan elements, these notes help ensure uniformity across plan sets and permit Mn/DOT to generate a historical price database that can be used to estimate the cost of future bridges. The Standard Summary of Quantities Notes for bridge projects is listed in Appendix 2-I.

Pay Items

A list of Standard Pay Items is provided in Appendix 2-J. Items for which payment to the contractor will be based on plan quantities are identified with a "(P)" as an appendix to the item label.

Miscellaneous

Round off quantities to the nearest pay item unit except for the following:

- Earth excavation to nearest 10 cubic yards.
- Reinforcement bars and structural metal to nearest 10 pounds.
- Piling lengths to nearest 5 feet.

When computing small bituminous quantities use the following:
Wearing course = 110 pounds / square yard / inch thickness

Shoulder or Wearing Course – 6.5%
0.065 (thickness in inches) (110 pounds) = ___ pounds / sq. yard

Tack Coat = 0.03 gallons / square yard

Binder or Base Course – 5.3%
0.053 (thickness in inches) (110 pounds) = _____ pounds / sq. yard

Deck area shall be computed (rounded to the nearest square foot) by multiplying the transverse out-to-out bridge width by the longitudinal end-of-deck to end-of-deck distance. (Do not include bridge approach panels or paving brackets.)

2.4.3 Revised Sheets

Sometimes, revisions to the plan are required after the letting due to an error found in the plan or other issues that arise during construction. When this occurs, use the following procedure:

1) Make the necessary revisions to the sheet in the electronic file and add a revision block that includes a description of the revision. (See Figure 2.4.3.1.)
2) Plot and certify the revised sheet.
3) Draft a transmittal letter from the Bridge Design Engineer to the Resident Engineer in the district construction office. Submit the letter and the revised sheet to the Bridge Design Engineer for distribution.

REVISION		
DATE	DESCRIPTION	APPROVED BY

REVISION BLOCK

Figure 2.4.3.1

2.5 Reconstruction Guidelines and Details

Typical details for the reconstruction of railings, superstructure joints, and pavement joints are presented in this section.

2.5.1 Superstructure

[Future manual content]

2.5.1.1 Railings

The following figures show typical details for railing reconstruction:

Figure 2.5.1.1.1 One-Line Railing Reconstruction on Existing Deck

Figure 2.5.1.1.2 F-Railing Reconstruction on Existing Deck

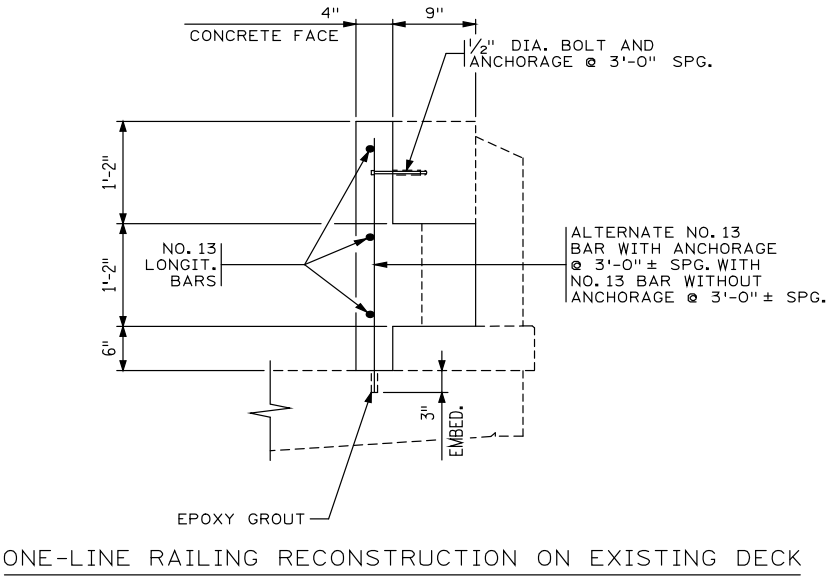

Figure 2.5.1.1.1
Railings

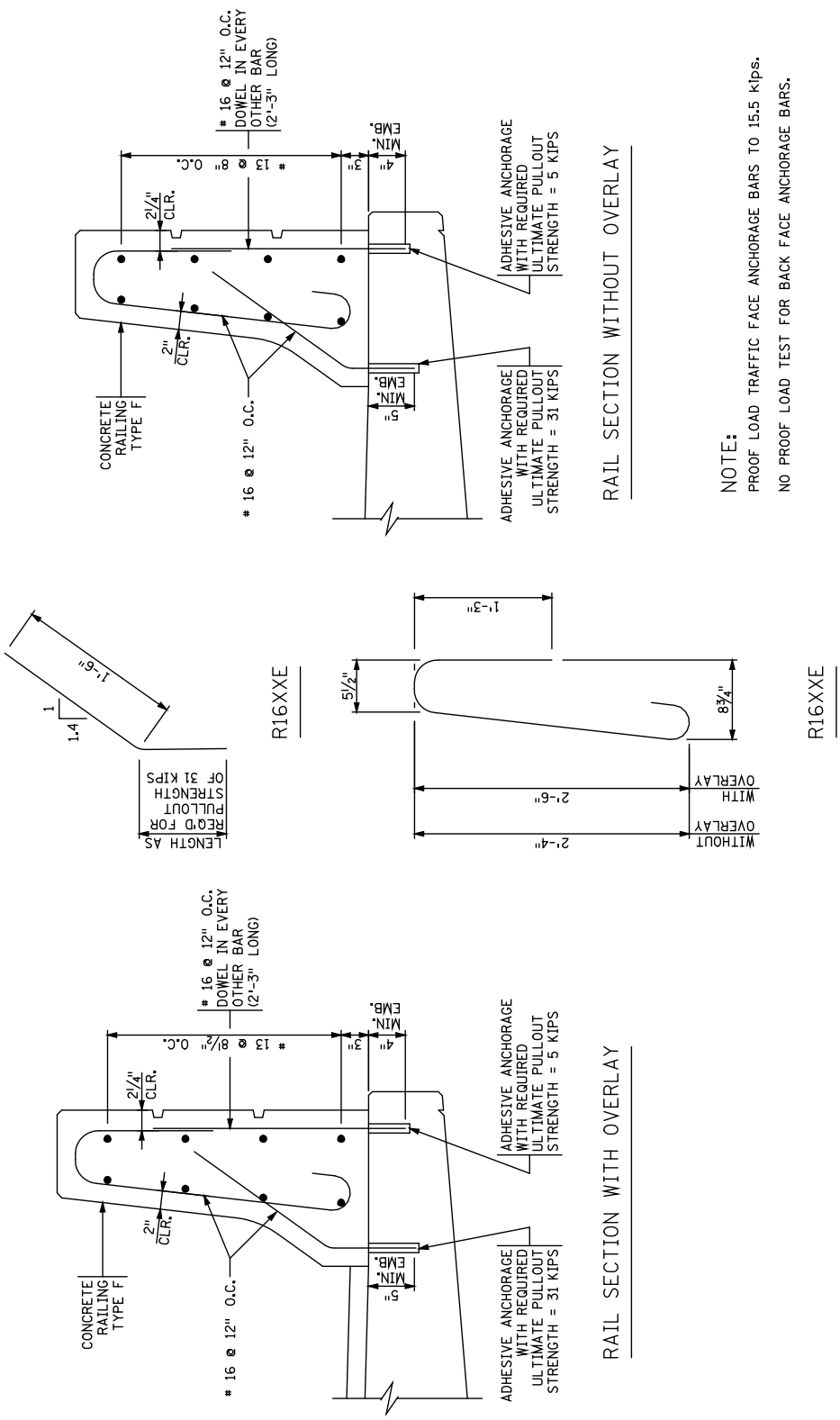

Figure 2.5.1.1.2
Railings

2.5.1.2 Wearing Course

[Future manual content]

2.5.1.3 Expansion/Fixed Joints

The following figures show typical details for the reconstruction of expansion joints and fixed joints:

Figure 2.5.1.3.1 Reconstruct Expansion Joint Type A
Figure 2.5.1.3.2 Reconstruct Expansion Joint Type B
Figure 2.5.1.3.3 Reconstruct Expansion Joint Type C
Figure 2.5.1.3.4 Reconstruct Expansion Joint Type D
Figure 2.5.1.3.5 Reconstruct Expansion Joint Type D
Figure 2.5.1.3.6 Reconstruct Expansion Joint Type E
Figure 2.5.1.3.7 Reconstruct Expansion Joint Type F
Figure 2.5.1.3.8 Reconstruct Expansion Joint Type X
Figure 2.5.1.3.9 Reconstruct Expansion Joint Type X
Figure 2.5.1.3.10 Reconstruct Fixed Joint Type A
Figure 2.5.1.3.11 Reconstruct Fixed Joint Type A

Expansion/Fixed Joint Reconstruction Pay Items

- Item No. 2433.603 "Reconstruct Expansion Joint, Type _____", Lin. Ft.
  - Type A – Replace sliding plate or inplace waterproof device with new waterproof joint.
  - Type B – Slab over parapet and contraction type abutments replace joint with waterproof joint at same location.
  - Type C – Slab over parapet, replace joint with waterproof joint at front of parapet.
  - Type D – Replace cork joint at pier with waterproof joint.
  - Type E – Replace joint at hinge with waterproof joint.
  - Type F – Replace finger joints with waterproof joint or raise device and place a waterproof trough.
  - Type X – Evazote material joint.
  - Type Special – None of the above or a combination of the above.

- Item No. 2433.603 "Reconstruct Fixed Joint, Type _____", Lin. Ft.
  - Type A – Eliminate inplace joint
  - Type B – Install waterstop
  - Type Special – None of the above

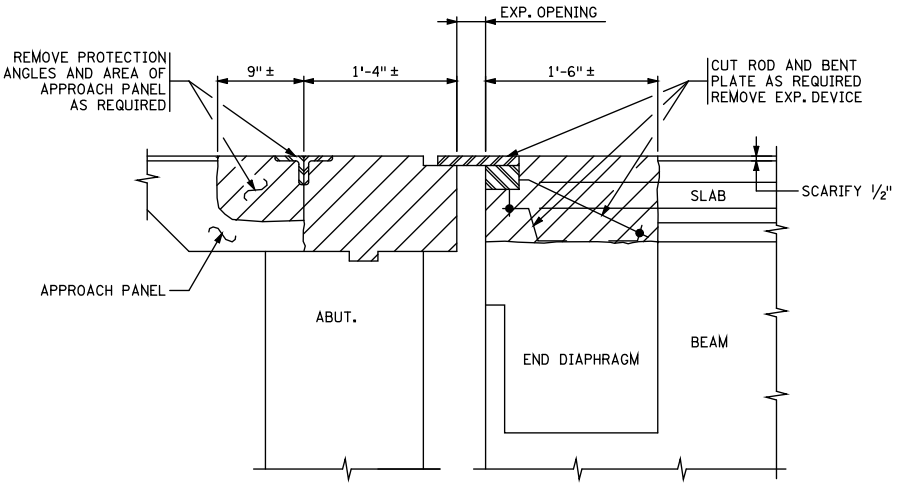

INPLACE SECTION

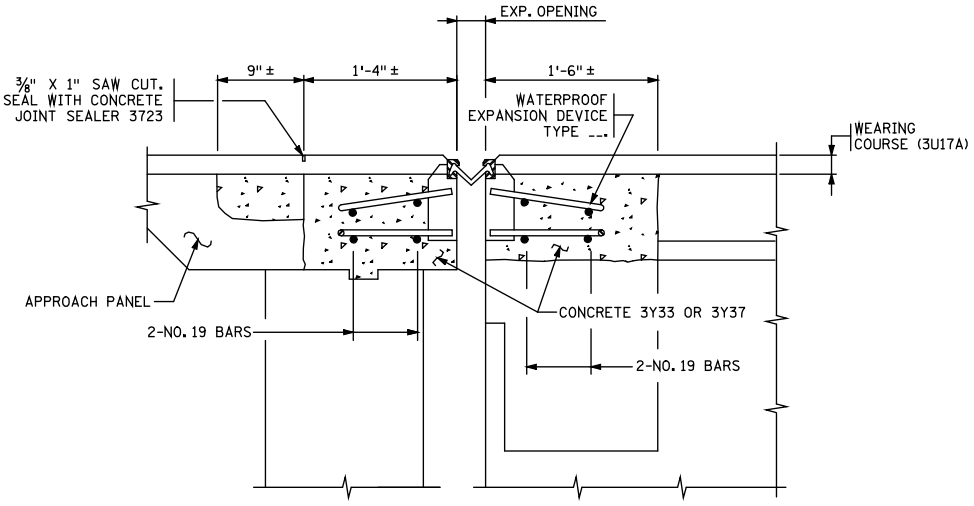

RECONSTRUCTED SECTION

RECONSTRUCT EXPANSION JOINT TYPE A

Figure 2.5.1.3.1
Expansion Joints

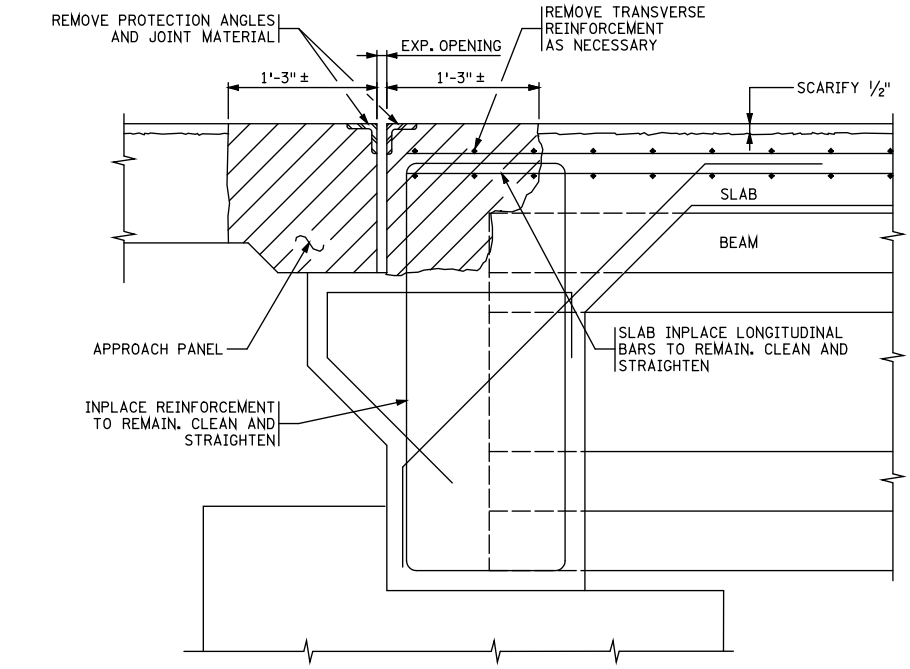

INPLACE SECTION

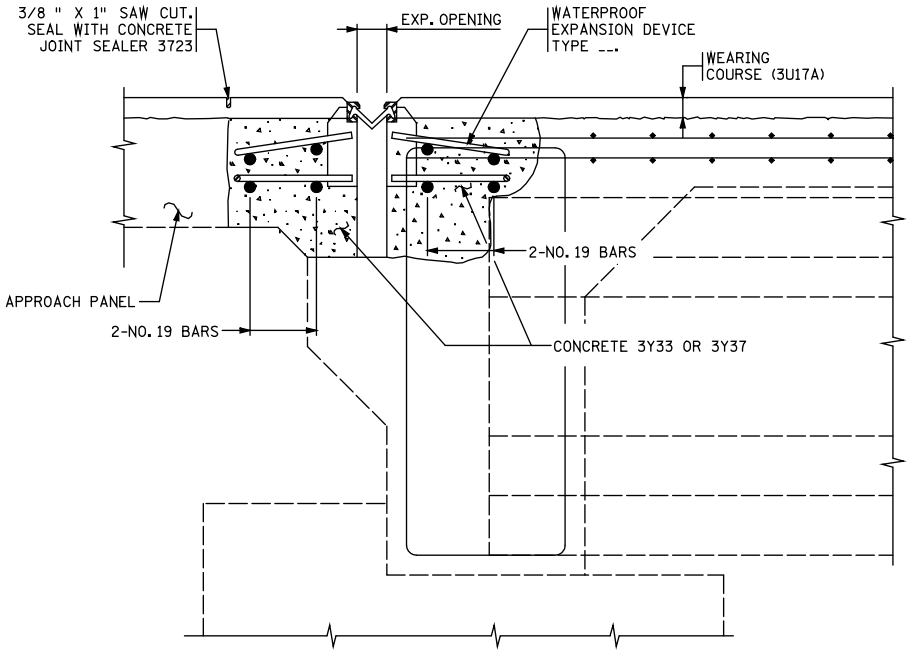

RECONSTRUCTED SECTION

RECONSTRUCT EXPANSION JOINT TYPE B

Figure 2.5.1.3.2
Expansion Joints

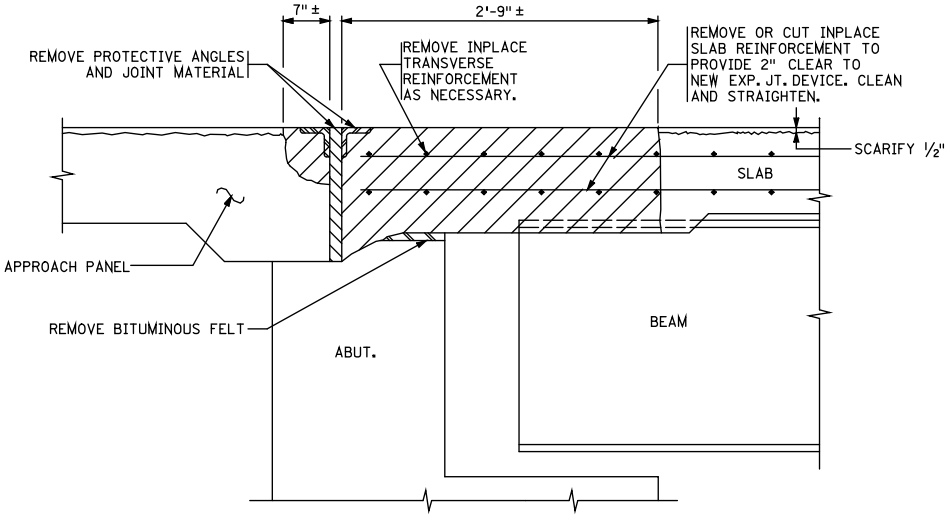

INPLACE SECTION

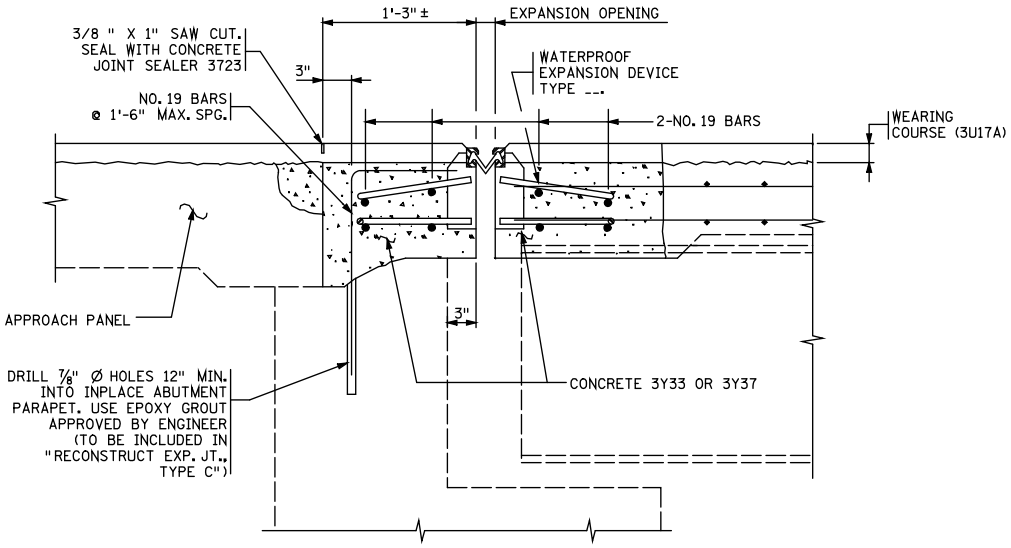

RECONSTRUCTED SECTION

RECONSTRUCT EXPANSION JOINT TYPE C

Figure 2.5.1.3.3
Expansion Joints

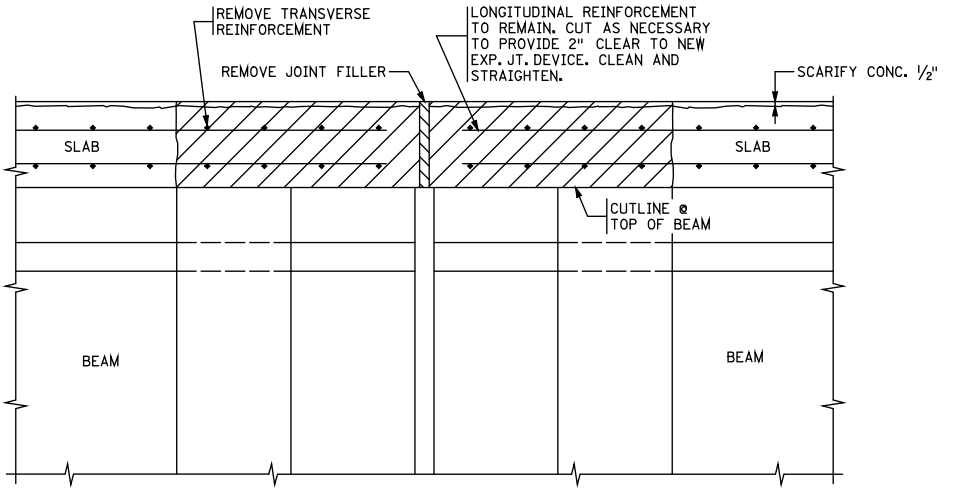

INPLACE SECTION

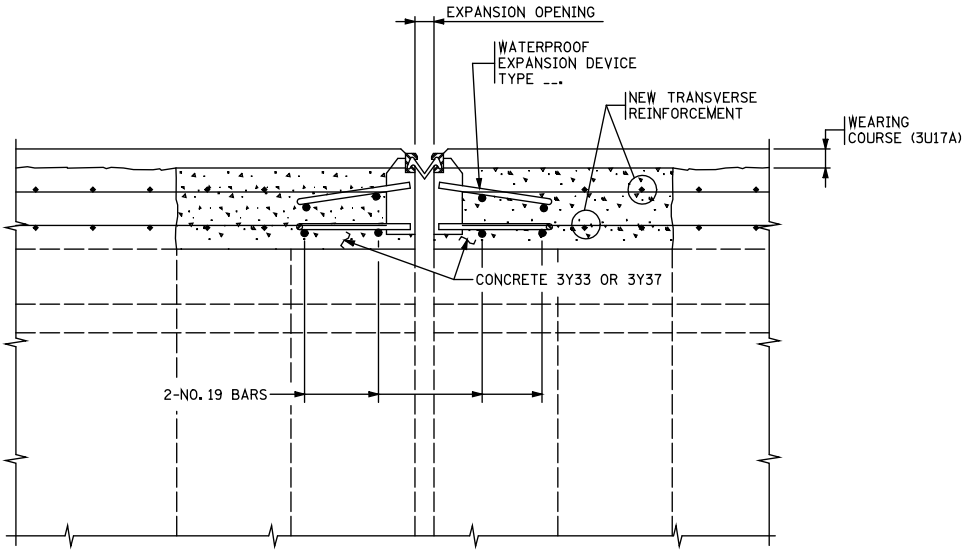

RECONSTRUCTED SECTION

RECONSTRUCT EXPANSION JOINT TYPE D

Figure 2.5.1.3.4
Expansion Joints

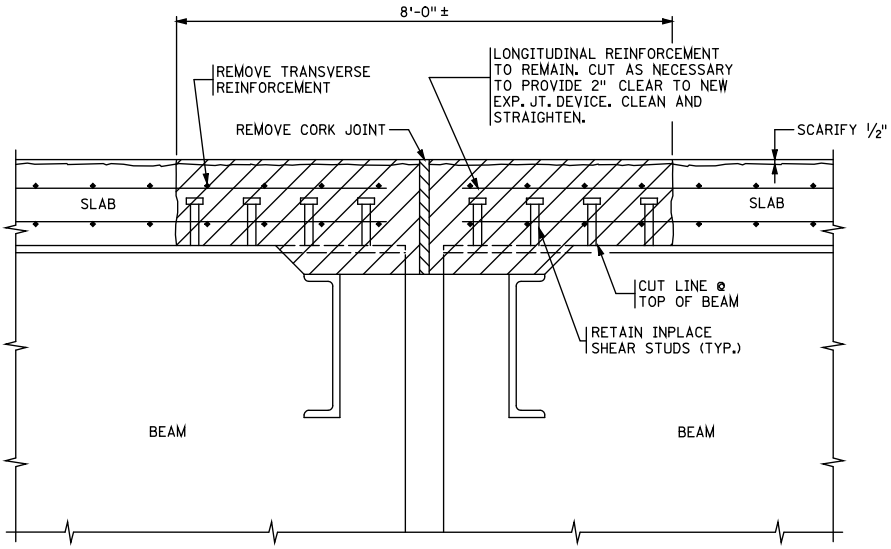

INPLACE SECTION

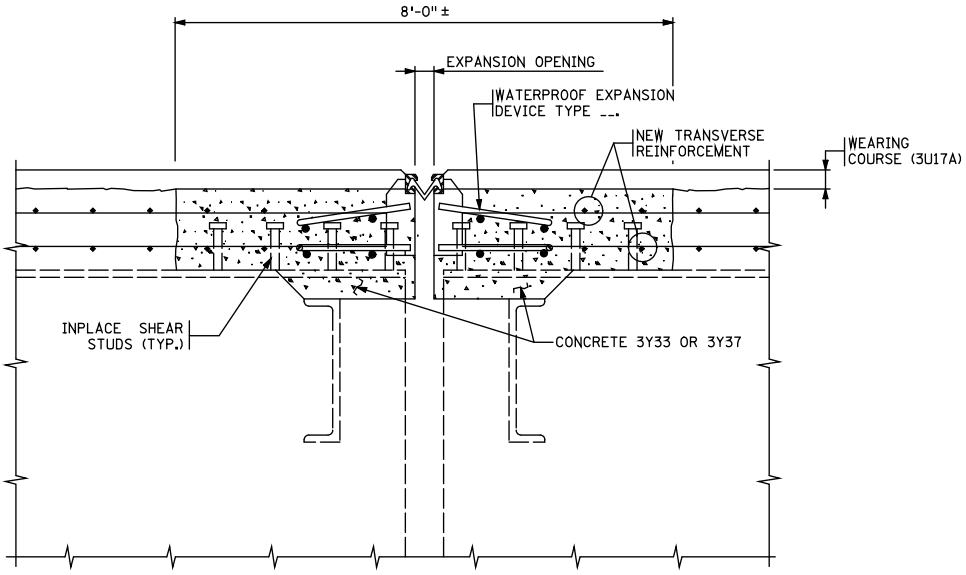

RECONSTRUCTED SECTION

RECONSTRUCT EXPANSION JOINT TYPE D

Figure 2.5.1.3.5
Expansion Joints

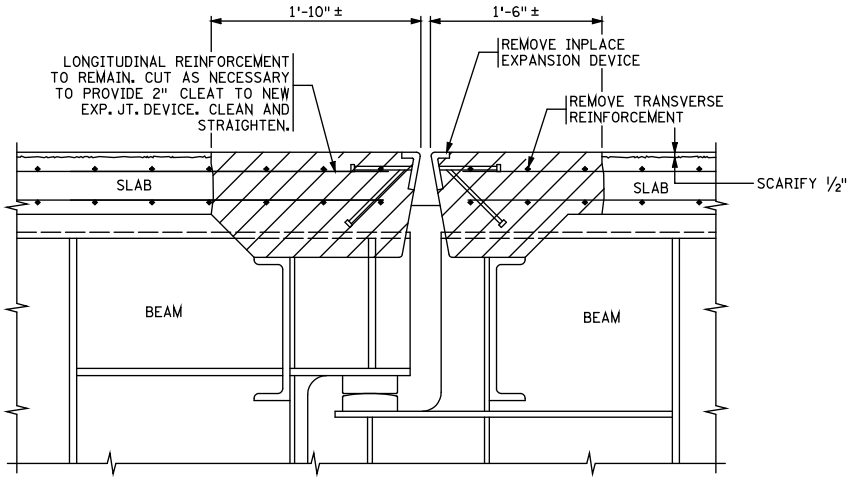

INPLACE SECTION

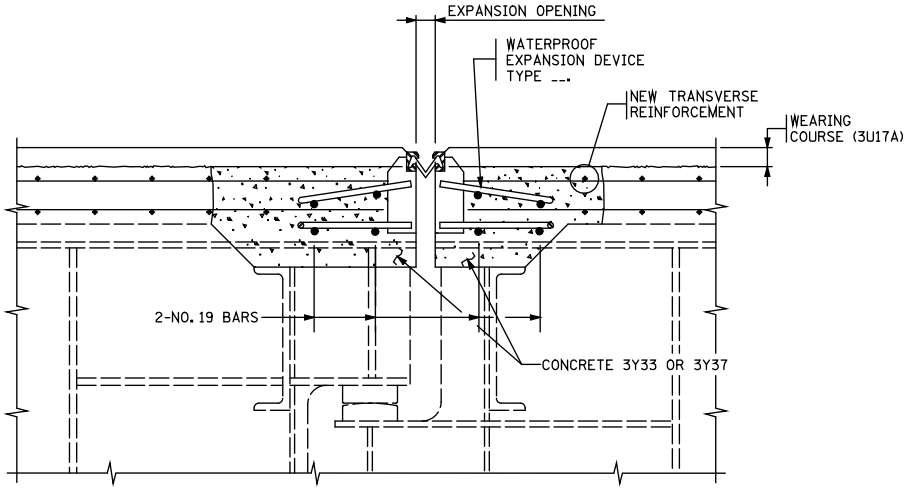

RECONSTRUCTED SECTION

RECONSTRUCT EXPANSION JOINT TYPE E

Figure 2.5.1.3.6
Expansion Joints

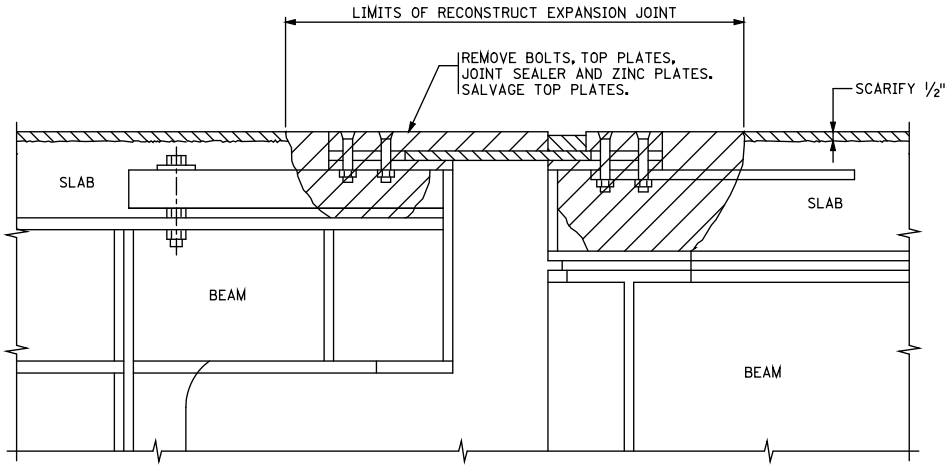

INPLACE SECTION

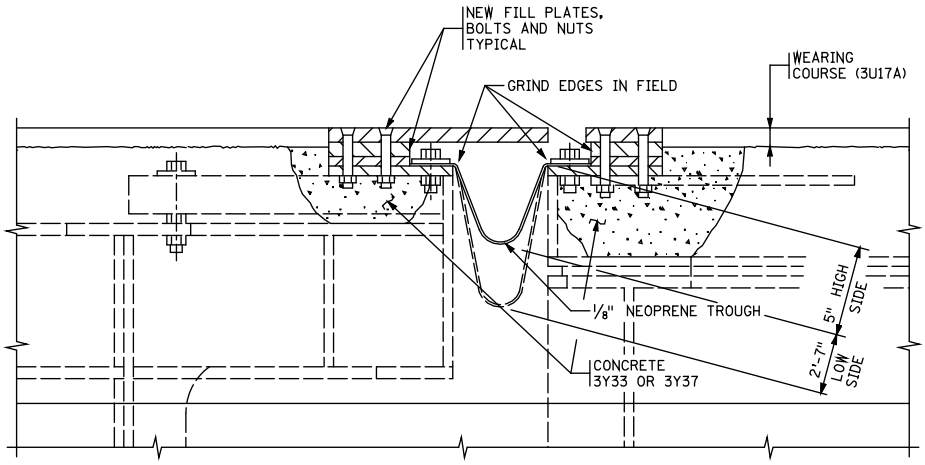

RECONSTRUCTED SECTION

RECONSTRUCT EXPANSION JOINT TYPE F

Figure 2.5.1.3.7
Expansion Joints

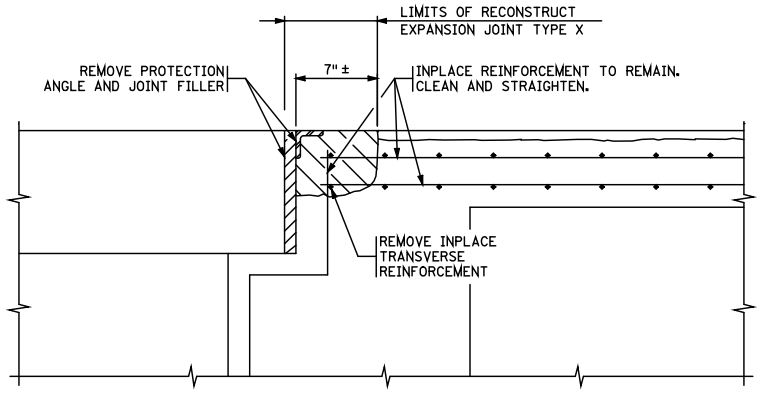

INPLACE SECTION AT ABUTMENTS

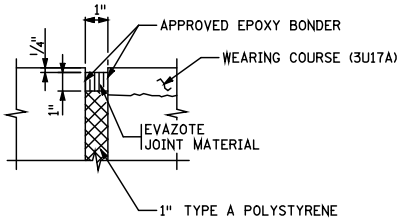

JOINT DETAIL

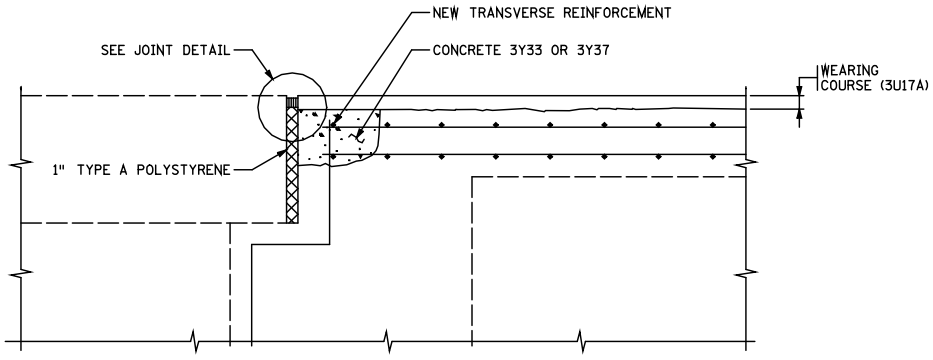

RECONSTRUCTED SECTION AT ABUTMENTS

RECONSTRUCT EXPANSION JOINT TYPE X

Figure 2.5.1.3.8
Expansion Joints

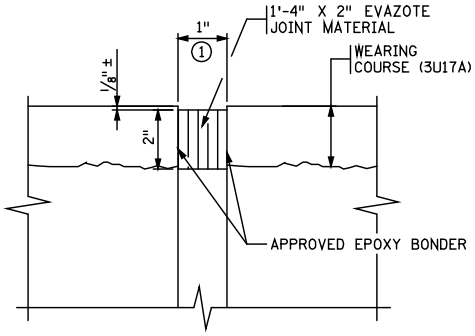

TYPICAL SECTION THRU SLAB OVER PIERS

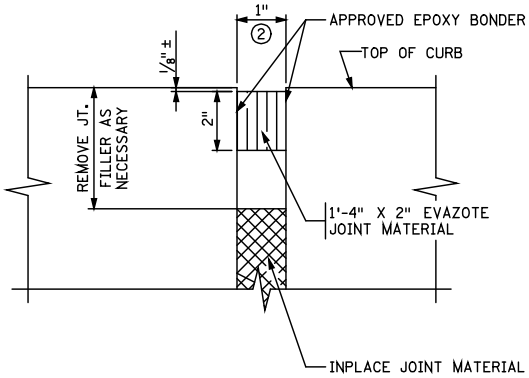

TYPICAL SECTION THRU CURB OVER PIERS

NOTES:

① FORMED OPENING TO MATCH INPLACE OPENING.

② INPLACE CURB JOINT TO BE CLEANED PRIOR TO PLACEMENT OF JOINT MATERIAL.

SEE SPECIAL PROVISIONS.

RECONSTRUCT EXPANSION JOINT TYPE X

Figure 2.5.1.3.9
Expansion Joints

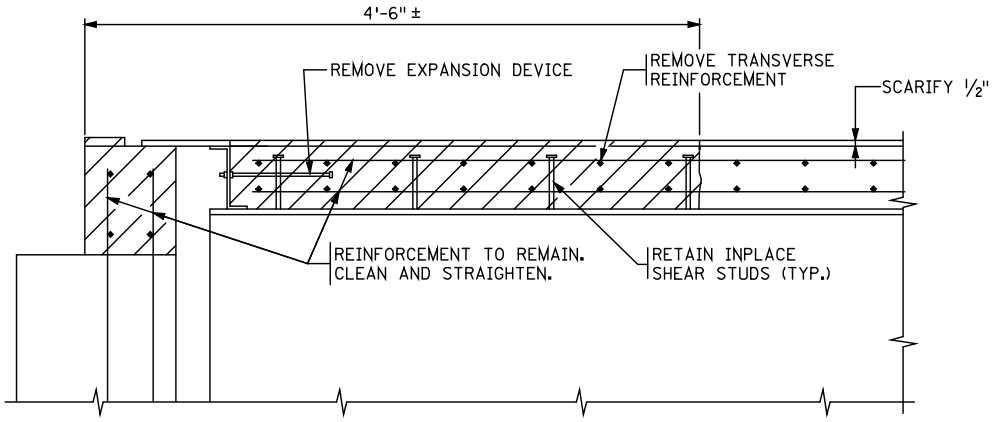

INPLACE SECTION AT ABUTMENTS

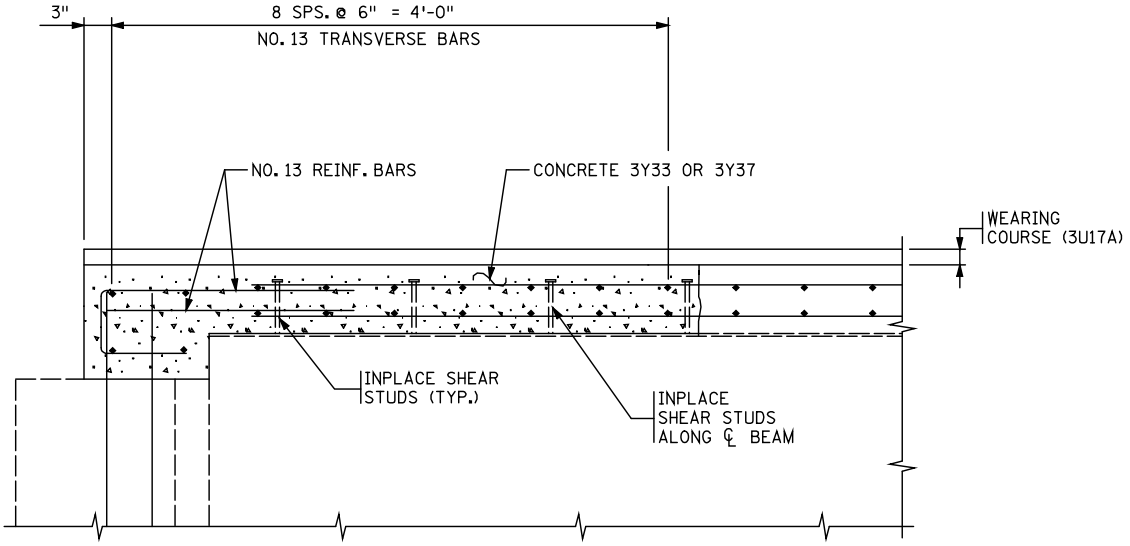

RECONSTRUCTED SECTION AT ABUTMENTS

RECONSTRUCT FIXED JOINT TYPE A

Figure 2.5.1.3.10
Fixed Joints

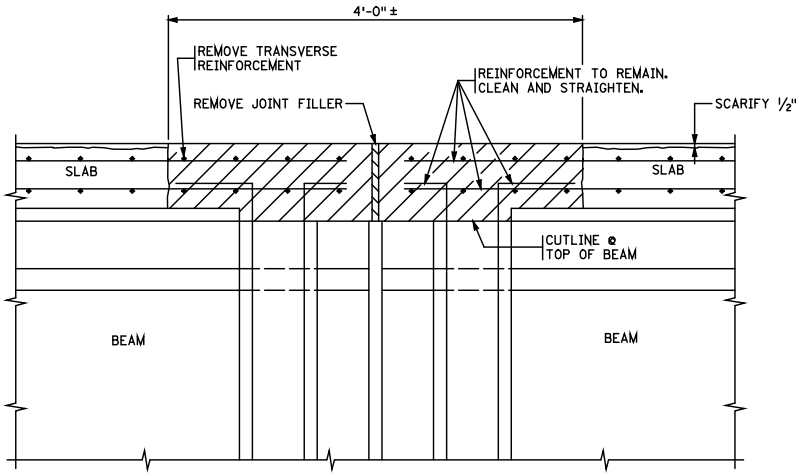

INPLACE SECTION OVER PIERS

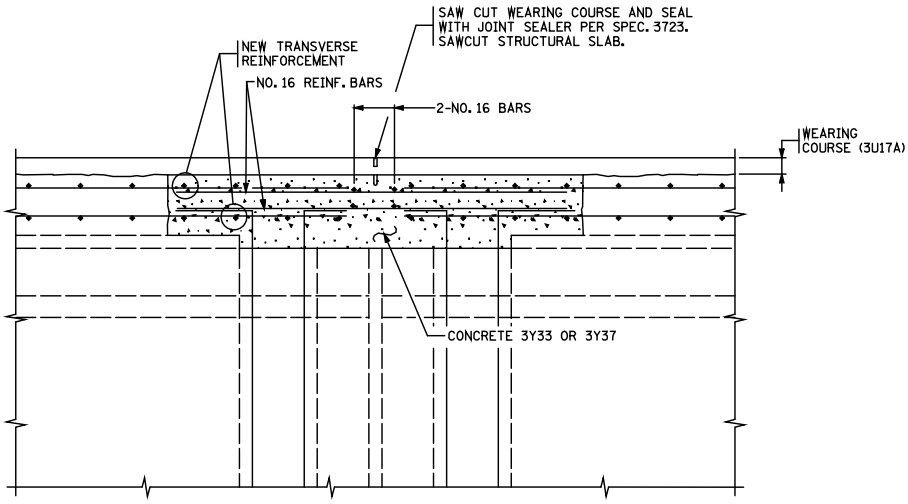

RECONSTRUCTED SECTION OVER PIERS

RECONSTRUCT FIXED JOINT TYPE A

Figure 2.5.1.3.11
Fixed Joints

2.5.2 Substructure

[Future manual content]

2.5.2.1 Abutments

[Future manual content]

2.5.2.2 Piers

[Future manual content]

2.5.3 Pavement

The following figures show typical details for pavement joint reconstruction:

Figure 2.5.3.1 Reconstruct Pavement Joint Type A
Figure 2.5.3.2 Reconstruct Pavement Joint Type B
Figure 2.5.3.3 Reconstruct Pavement Joint Type C
Figure 2.5.3.4 Reconstruct Pavement Joint Type Special
Figure 2.5.3.5 Reconstruct Pavement Joint Type Special

Pavement Joint Reconstruction Pay Items

- Item No. 2433.603 "Reconstruct Pavement Joint, Type ____", Lin. Ft.
  - Type A – Approach panel or roadway, remove inplace protection angles and compression seals and recast concrete. (Eliminate Joint.)
  - Type B – Approach panel, replace inplace joint or crack with concrete sill and 4" relief joint.
  - Type C – Remove protection angles and replace with roadway joint.
  - Type Special – None of the above or a combination of the above.

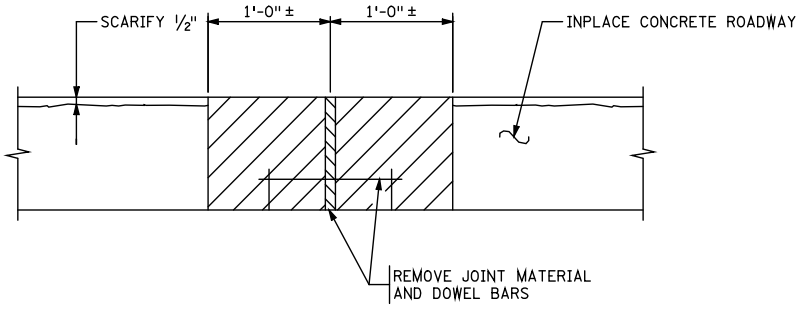

INPLACE SECTION

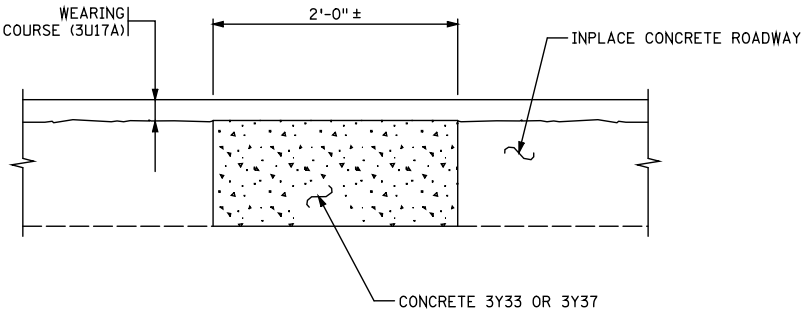

RECONSTRUCTED SECTION

RECONSTRUCT PAVEMENT JOINT TYPE A

Figure 2.5.3.1
Pavement Joints

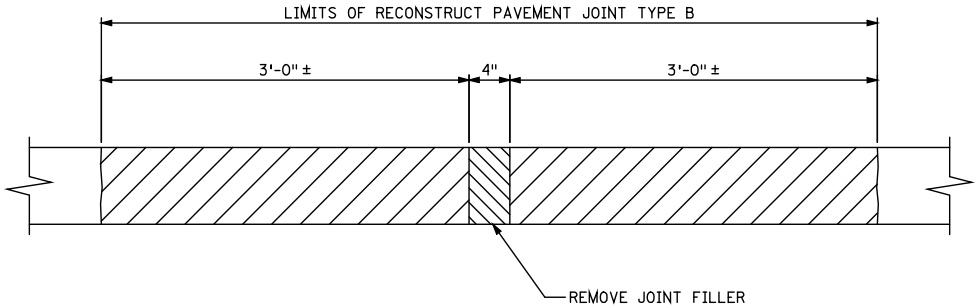

INPLACE SECTION

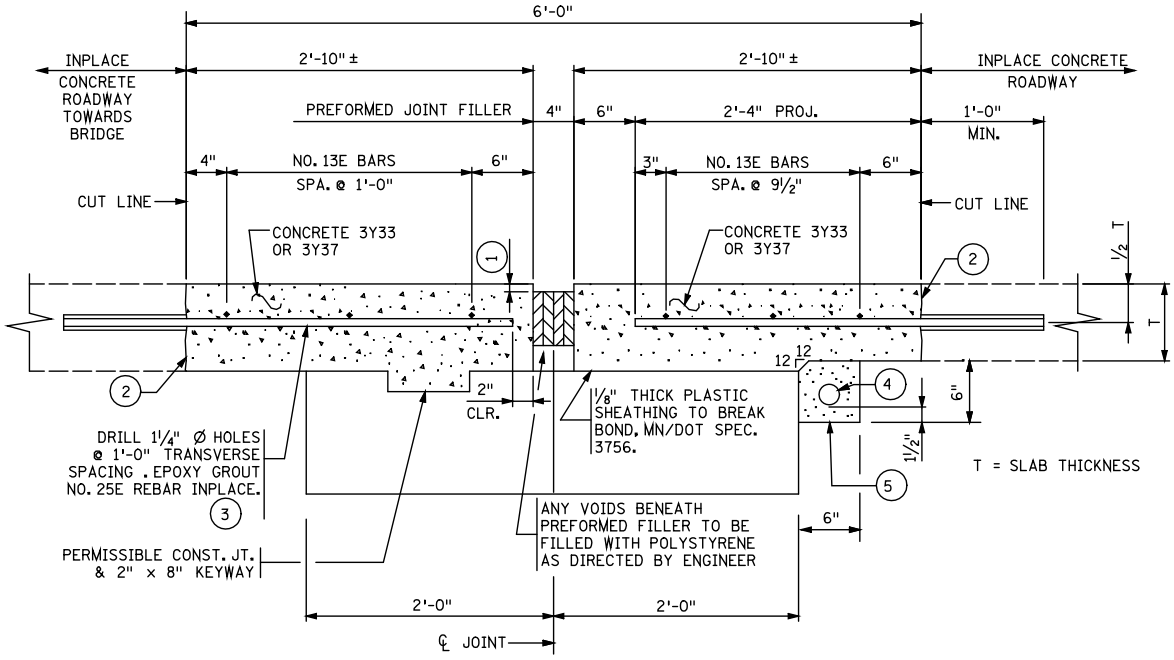

RECONSTRUCTED SECTION

1. TOP OF FILLER TO BE PLACED 3/4 " TO 1" BELOW TOP OF PAVEMENT. PLACE JOINT SEALER MN/DOT SPEC. 3723 OR 3725 ABOVE FILLER 3/8 " ± 1/8 " BELOW TOP OF PAVEMENT.
2. CLEAN EXPOSED FACE BY SAND BLASTING AND AIR BLASTING. APPLY APPROVED BONDING GROUT IMMEDIATELY PRIOR TO CONCRETE PLACEMENT.
3. REBARS SHALL BE PLACED PARALLEL TO ℄ OF ROADWAY ON SKEWS AND TANGENT TO ℄ ON CURVED ROADWAYS.
4. 2" NOMINAL DIA. THERMOPLASTIC PERFORATED PIPE AS PER MN/DOT SPEC. 3245. WRAP PIPE WITH GEOTEXTILE AS PER MN/DOT SPEC. 3733. SLOPE PIPE TO DITCH ON LOW SIDE. 1/8 " PER FT. MINIMUM SLOPE. FURNISHING AND INSTALLING DRAIN SYSTEM SHALL BE INCIDENTAL WITH NO DIRECT PAYMENT.
5. BACKFILL WITH FINE AGGREGATE, MN/DOT SPEC. 3149, MODIFIED TO 0-3% PASSING A NO. 200 SIEVE.

RECONSTRUCT FIXED JOINT TYPE B

Figure 2.5.3.2
Pavement Joints

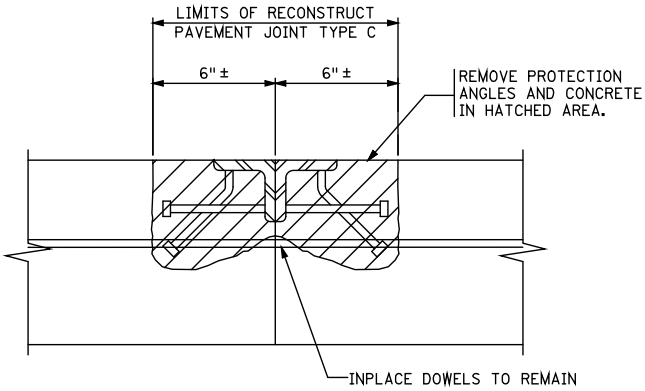

INPLACE SECTION

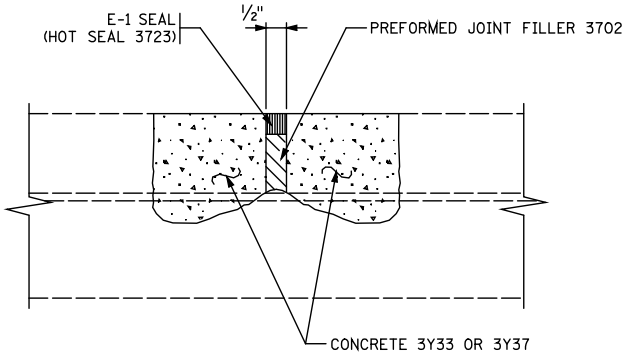

RECONSTRUCTED SECTION

RECONSTRUCT PAVEMENT JOINT TYPE C

Figure 2.5.3.3
Pavement Joints

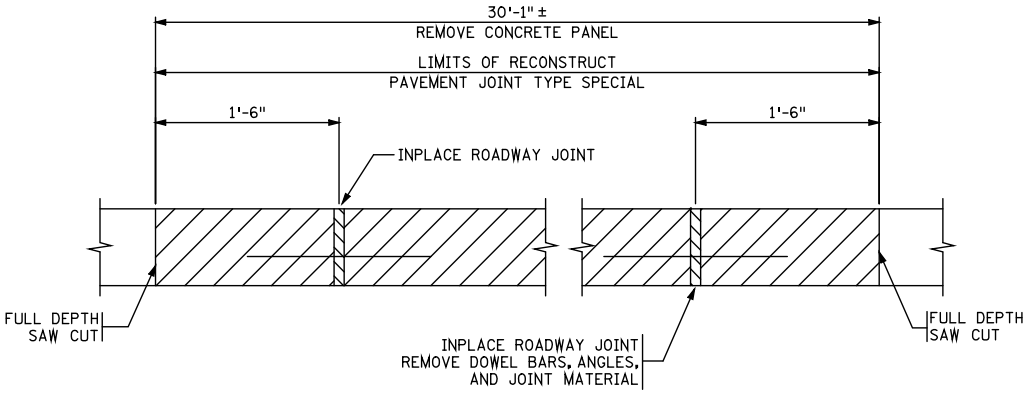

INPLACE SECTION

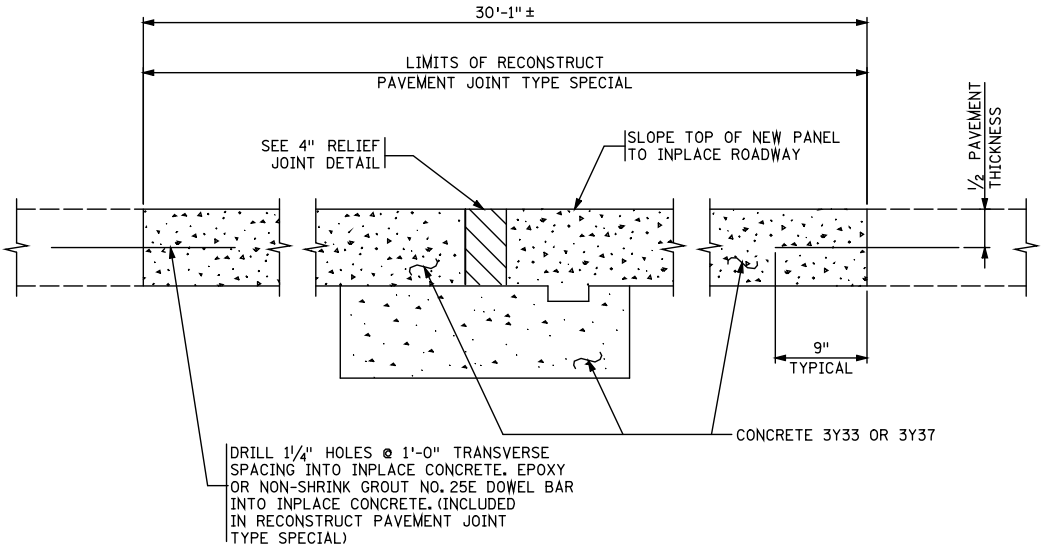

RECONSTRUCTED SECTION

RECONSTRUCT FIXED JOINT TYPE SPECIAL

Figure 2.5.3.4
Pavement Joints

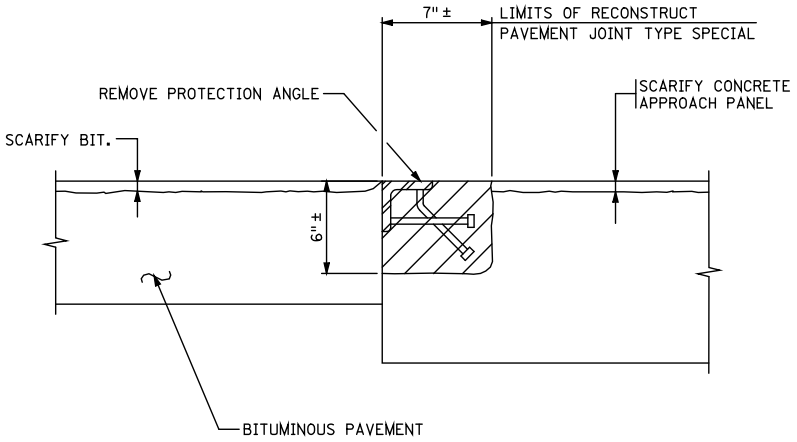

INPLACE SECTION

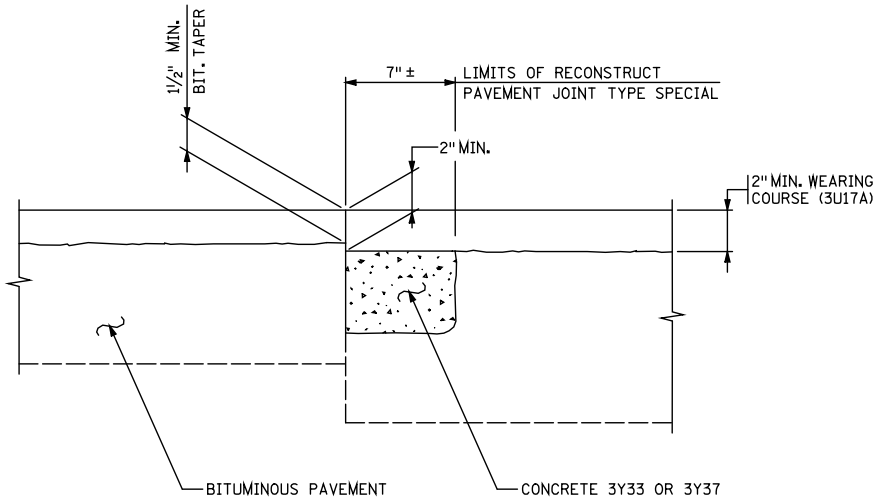

RECONSTRUCTED SECTION

RECONSTRUCT PAVEMENT JOINT TYPE SPECIAL

Figure 2.5.3.5
Pavement Joints

2.6 Construction Requirements

Mn/DOT's general practices and guidelines for the construction of bridges are presented in Mn/DOT's *Bridge Construction Manual*. The manual number is 5-393. It contains sections on:

.050	Preparation of Foundation and Backfill
.100	Pile Driving
.150	Falsework and Forms
.200	Metal Reinforcement
.250	Concrete Bridge Construction
.300	Timber Construction
.350	Steel Construction
.400	Surface Preparation and Painting Structural Steel
.650	Slope Protection
.700	Construction on Railroad Right-of-Way

The contract documents for the project shall explicitly state the required submittals and the qualifications of the individuals responsible for the preparation of falsework and other submittals.

Falsework and forms are to be designed in accordance with the AASHTO *Guide Design Specifications for Bridge Temporary Works*. Falsework submittals shall meet the requirements of Bridge Special Provision No. BS2ME-2401.2.

Submittals describing proposed temporary shoring for works adjacent to railroad tracks require approval by the railroad.

The details or specifics of a temporary shoring design are to be detailed in the plans with consideration given to the domestic availability of the materials used. Frequently, showing the location of the sheeting and the minimum required section modulus is sufficient. However, designers should satisfy themselves that adequate clearances have been provided for at least one reasonable shoring scheme for staged construction projects. If more complex details are required, they must be provided in the plans. See Sections 11.3.7 and 11.3.8 for more guidance.

APPENDIX 2-A
BRIDGE TYPE NUMBERS

MINNESOTA BRIDGE TYPE IDENTIFICATION NUMBER (3 characters)

First Digit (Material)		Second & Third Digits (Bridge Type)	
1	Concrete	01	Beam Span
2	Concrete Continuous	02	Low Truss
3	Steel	03	High Truss
4	Steel Continuous	04	Deck Truss
5	Prestress	05	Thru Girder
6	Prestress Continuous	06	Deck Girder
7	Timber	07	Box Girder
8	Masonry	08	Rigid Frame
9	Wrought or Cast Iron	09	Slab Span
O	Other	10	Slab Span-Voided
A	Aluminum	11	Channel Span
P	Post Tensioned	12	Arch
		13	Box Culvert
		14	Pipe Culvert (Round)
		15	Pipe Arch
		16	Long Span
		17	Tunnel
		18	Movable
		19	Other
		20	Double Tee
		21	Quad Tee
		22	Bulb Tee
		23	Suspension
		24	Tied Arch

EXAMPLES	
BRIDGE TYPE	**ID NUMBER**
Continuous Concrete Multiple Box Girders	207
Simple Span Concrete Slab	109
Tunnel in Rock	017
Prestressed Beam Span	501 approach span
Steel Continuous Beam Span	401 main span
Concrete Channel Span	111

Note: A bridge may have one identification number for main span and another number for approach span. Identify main span and approach span accordingly.

APPENDIX 2-B *
SPECIAL PROVISIONS – 2005 SPEC. BOOK
TABLE OF CONTENTS

NO.	TITLE
SB2005-1	INDEX (COMBINED)
SB2005-1	BRIDGE PLANS
SB2005-1508	(1508) CONSTRUCTION STAKES, LINES, AND GRADES
SB2005-1706	(1706) EMPLOYEE HEALTH AND WELFARE
SB2005-1707	(1707) CONST. OPERATIONS ADJACENT TO RDWYS.
SB2005-1709	(1709) NAVIGABLE WATERWAYS
SB2005-1717	(1717) AIR, LAND AND WATER POLLUTION
SB2005-1803	(1803) PROSECUTION OF WORK
SB2005-1807.1	(1807) FAILURE TO COMPLETE WORK ON TIME
SB2005-1807.2	(1807) FAILURE TO COMPLETE WORK ON TIME
SB2005-2104	(2104) REMOVAL OF REGULATED WASTE (BRIDGE)
SB2005-2105	BRIDGE ABUTMENT CONSTRUCTION
SB2005-2301	BRIDGE APPROACH PANELS
SB2005-2360	PLANT MIXED ASPHALT PAVEMENT
SB2005-2401	(2401) CONCRETE BRIDGE CONSTRUCTION
SB2005-2401.1	Concrete Aggregate for Bridges
SB2005-2401.2	Falsework and Forms and Bridge Slab Placement
SB2005-2401.3	Beam Tie Downs for Slab Construction
SB2005-2401.4	Bridge Slab
SB2005-2401.5	Placement of Concrete in High Abutments
SB2005-2401.6	Slipforming of Bridge Railing Prohibited
SB2005-2401.7	Placement of Concrete (District 8 only)
SB2005-2401.8	Bridge Slabs (not for Metro)
SB2005-2401.9	Joint Filler and Sealing
SB2005-2401.10	Architectural Concrete Texture
SB2005-2401.11	Finish of Concrete
SB2005-2401.12	Finish of Concrete
SB2005-2401.13	Finish of Inplace Concrete
SB2005-2401.14	BLANK
SB2005-2401.15	BLANK
SB2005-2401.16	BLANK
SB2005-2401.17	BLANK
SB2005-2401.18	Roadway Finish of Bridge Slabs
SB2005-2401.19	BLANK
SB2005-2401.20	Curing Bridge Deck Slabs

* Refer to http://www.dot.state.mn.us/bridge/ for current Bridge Special Provisions

APPENDIX 2-B * (Continued)
SPECIAL PROVISIONS – 2005 SPEC. BOOK
TABLE OF CONTENTS

NO.	TITLE
SB2005-2401.21	POST TENSIONING SYSTEM
SB2005-2401.22	Curing Bridge Structural Slab
SB2005-2401.23	Integral Concrete Diaphragms
SB2005-2402	(2402) STEEL BRIDGE CONSTRUCTION
SB2005-2402.1	BLANK
SB2005-2402.2	Dimensional Tolerances
SB2005-2402.3	Fracture Critical Steel Bridge Members
SB2005-2402.4	Expansion Joint Devices
SB2005-2402.5	Modular Bridge Joint System
SB2005-2402.6	Metal Railing
SB2005-2402.7	POT BEARING ASSEMBLIES
SB2005-2402.8	BLANK
SB2005-2402.9	Existing Cover Plate Weld Inspection
SB2005-2402.10	Bolted Connections
SB2005-2403	(2403) TIMBER BRIDGE CONSTRUCTION
SB2005-2404	(2404) CONCRETE WEARING COURSE FOR BRIDGES
SB2005-2404.1	Concrete Wearing Course 3U17A
SB2005-2404.2	Concrete Wearing Course 3U17A
SB2005-2404.3	Roadway Finish of Bridge Slabs
SB2005-2405	(2405) PRESTRESSED CONCRETE BEAMS
SB2005-2405.1	Prestressed Concrete Fabricator Certification
SB2005-2405.2	Steel Intermediate Diaphragms
SB2005-2405.3	Concrete Finish of Exterior Beams
SB2005-2405.4	Prestress Transfer
SB2005-2433	(2433) STRUCTURE RENOVATION
SB2005-2433.1	Structure Removals
SB2005-2433.2	Remove Concrete Bridge Deck
SB2005-2433.3	Anchorages
SB2005-2433.4	Grouted Anchorages
SB2005-2433.5	BRIDGE SURFACE SEALER
SB2005-2433.6	Removal of Existing Steel Members
SB2005-2433.7	Bridge Surface and Crack Sealer
SB2005-2433.8	Reinforcement Bar Anchorage (Post-installed)
SB2005-2442	(2442) REMOVAL OF EXISTING BRIDGES
SB2005-2451	(2451) STRUCTURE EXCAVATIONS AND BACKFILLS
SB2005-2451.1	Structure Excavation
SB2005-2451.2	Aggregate Backfill

* Refer to http://www.dot.state.mn.us/bridge/ for current Bridge Special Provisions

APPENDIX 2-B * (Continued)
SPECIAL PROVISIONS – 2005 SPEC. BOOK
TABLE OF CONTENTS

NO.	TITLE
SB2005-2451.3	Foundation Backfill
SB2005-2451.4	Foundation Preparation (Pier Nos. _____)
SB2005-2451.5	Foundation Preparation (Pier Nos. _____)
SB2005-2451.6	Foundation Exploration
SB2005-2451.7	Foundation Preparation for Pile Bent Pier(s) -- Bridge No(s)._____
SB2005-2452	(2452) PILING
SB2005-2452.1	Pile Authorization
SB2005-2452.2	Equipment for Driving
SB2005-2452.3	Pile Tip Protection
SB2005-2452.4	Pile Points
SB2005-2452.5	BLANK
SB2005-2452.6	Pile Load Test
SB2005-2452.7	Dynamic Monitoring of Pile Driving
SB2005-2452.8	Substitution for Steel H-Piling
SB2005-2452.9	Substitution for Steel H-Piling Prohibited
SB2005-2452.10	BLANK
SB2005-2452.11	Extensions and Splices
SB2005-2453	(2453) DRILLED SHAFT CONSTRUCTION
SB2005-2461	(2461) STRUCTURAL CONCRETE
SB2005-2471	(2471) STRUCTURAL METALS
SB2005-2476.1	METHODS FOR PAINT REMOVAL AND WASTE DISPOSAL
SB2005-2476.2	CONTAINMENT AND DISPOSAL OF WASTE MATERIALS
SB2005-2478	(2478) ORGANIC ZINC-RICH PAINT SYSTEM
SB2005-2478.1	Removal of Soluble Salts
SB2005-2479	(2479) INORGANIC ZINC-RICH PAINT SYSTEM
SB2005-2514.1	FABRIC-FORMED SLOPE PAVING
SB2005-2514.2	(2514) SLOPE PAVING
SB2005-2545	CONDUIT SYSTEMS
SB2005-2557.1	(2557) FENCING
SB2005-2557.2	(2557) FENCING
SB2005-3371	(3371) STEEL SHELLS FOR CONCRETE PILING
SB2005-3372	(3372) STEEL PILING
SB2005-3385	(3385) ANCHOR RODS
SB2005-3391	(3391) FASTENERS
SB2005-3471	(3471) TIMBER PILING
SB2005-3741	(3741) ELASTOMERIC BEARING PADS

* Refer to http://www.dot.state.mn.us/bridge/ for current Bridge Special Provisions

APPENDIX 2-C
STANDARD ABBREVIATIONS

A

AASHTO ..... American Association of State Highway and Transportation Officials
ABT. ..... About
ABUT. ..... Abutment
ADT ..... Average Daily Traffic
ADTT ..... Average Daily Truck Traffic
ALT. ..... Alternate
APPR. ..... Approach
APPROX. .... Approximate (or Approximately)
ASSY. ..... Assembly
AZ. ..... Azimuth
@ ..... At

B

B.F. ..... Back Face
BIT. ..... Bituminous
B.M. ..... Bench Mark
BM ..... Beam
BOT. ..... Bottom
BR. ..... Bridge
BRG. ..... Bearing
BTWN. ..... Between

C

C & G..... Curb and Gutter
C-I-P ..... Cast-In-Place
C_L ..... Centerline
CL. (or CLR.)..... Clear
C.M.P. ..... Corrugated Metal Pipe
COL. ..... Column
COMP. ..... Composite
CONC. ..... Concrete
CONST. ..... Construction
CONT. ..... Continuous (or Continued)
C.S.A.H. ..... County State Aid Highway
CU. ..... Cubic
CULV. ..... Culvert

D

D.C. ..... Degree of Curve
DET. ..... Detail
D.H.V. ..... Design Hourly Volume
D.H.W. ..... Design High Water
DIA. ..... Diameter
DIAPH. ..... Diaphragm
DL ..... Dead Load
DWL. ..... Dowel

E

E. ..... East
E.B.L. ..... East Bound Lane(s)
E.F. ..... Each Face
EA. ..... Each
ELEV. (or EL.) ..... Elevation
EMBED. ..... Embedment
ENGR. ..... Engineer
EQ. ..... Equal
EXP. ..... Expansion

F

F. ..... Fahrenheit
F.B.M. ..... Foot Board Measure
F.F. ..... Front Face
F.L. ..... Flowline
FIN. ..... Finished
FIX ..... Fixed
FT. ..... Foot (or Feet)
FTG. ..... Footing

G

G1 ..... Grade One
G2 ..... Grade Two
GA. ..... Gage

APPENDIX 2-C (Continued)
STANDARD ABBREVIATIONS

H

HCADT ..... Heavy Commercial Average Daily Traffic
H.W. ..... High Water
HORIZ. ..... Horizontal
HWY. ..... Highway

I

INPL. ..... Inplace
I.D. ..... Inside Diameter

J

JCT. ..... Junction
JT. ..... Joint

K

KWY. ..... Keyway

L

L. ..... Length of Curve
LL ..... Live Load
L.W. ..... Low Water
LB. ..... Pound
LIN. ..... Linear
LT. ..... Left
LONG. (or LONGIT.) ..... Longitudinal

M

m ..... Meter
mm ..... Millimeter
M.B.M. ..... Thousand Board Feet
M.L. ..... Main Line
M.O. ..... Maximum Offset
MAX. ..... Maximum
MIN. ..... Minimum
MISC. ..... Miscellaneous

N

N. (or NO.) ..... North
N.B.L. ..... North Bound Lane(s)
NO. ..... Number

O

O.D. ..... Outside Diameter

P

P.C. ..... Point of curvature
P.C.C. ..... Point of compound Curve
P.G. ..... Profile Grade
P.I. ..... Point of Intersection
P.O.C. ..... Point on Curve
P.O.T. ..... Point on Tangent
P.S.I. ..... Pounds per Square Inch
P.T. ..... Point of Tangency
PED. ..... Pedestrian
P_L ..... Plate
PRESTR. ..... Prestressed
PROJ. ..... Project (or Projection)
PROV. ..... Provision
PT. ..... Point

R

R. ..... Radius
R.O.W. ..... Right of Way
R.R. ..... Railroad
R.S.C. ..... Rigid Steel Conduit
RDWY. ..... Roadway
REINF. ..... Reinforced (or Reinforcing/ment)
REQ'D ..... Required
REV. ..... Revised
RT. ..... Right

S

S. (or SO.) ..... South
S.B.L. ..... South Bound Lane(s)
SEC. ..... Section
SDWK. ..... Sidewalk
SHLDR. ..... Shoulder

APPENDIX 2-C (Continued)
STANDARD ABBREVIATIONS

S (cont.)

SHT. .....Sheet
SP. (or SPS.) .....Spaces
SPA. ..... Spaced
SPEC. ..... Special (or Specification)
SPG. .....Spacing
SQ. .....Square
STA. .....Station
STD. .....Standard
STIFF. .....Stiffener
STL. ..... Steel
STR. (or STRUC.) .....Structure
SUBGR. ..... Subgrade
SUPER. .....Superelevation
SUPERST. .....Superstructure
SYM. ..... Symmetrical

T

T & B ..... Top and Bottom
T.H. .....Trunk Highway
T.T.C. .....Tangent to Curve
TAN. ..... Tangent
TWP. .....Township
TYP. .....Typical

V

V.C. ..... Vertical Curve
V.P.C. ..... Vertical Point of Curvature
V.P.I. ..... Vertical Point of Intersection
V.P.T. .....Vertical Point of Tangency
VAR. .....Varies
VERT. ..... Vertical

W

W. .....West
W.B.L. .....West Bound Lane(s)
W.C. .....Wearing Course
W.P. ..... Working Point
W.W. ..... Wingwall

Y

YD. ..... Yard

APPENDIX 2-D*
BRIDGE DETAILS PART I (B-DETAILS)

NAME	DESCRIPTION
B101	Bridge Nameplate (For New Bridges)
B102	Bridge Nameplate (For Bridge Reconstruction)
B201	Pile Splice (Cast-In-Place Concrete Piles)
B202	Pile Splice (Steel H Bearing Piles 10" To 14")
B303	Sole Plate (Prestressed Concrete Beams) (For Bearings With Pintles)
B304	Elastomeric Fixed Bearing Assembly (Prestressed Concrete Beams) (For Replacement Of Inplace Bearings Only)
B305	Elastomeric Expansion Bearing Pad (Prestressed Concrete Beams) (For Replacement Of Inplace Bearings Only)
B308	Elastomeric Bearing Assembly (22" And 30" Concrete Double Tee Beams) (Fixed and Expansion)
B310	Curved Plate Bearing Assembly (Prestressed Concrete Beams) (Fixed)
B311	Curved Plate Bearing Assembly (Prestressed Concrete Beams) (Expansion)
B312	Pot Type Bearing Assembly (Prestressed Concrete Beams) (Guided Expansion)
B313	Pot Type Bearing Assembly (Prestressed Concrete Beams) (Non-Guided Expansion)
B314	Pot Type Bearing Assembly (Steel Beams) (Guided Expansion)
B315	Pot Type Bearing Assembly (Steel Beams) (Non-Guided Expansion)
B316	Pot Type Bearing Assembly (Steel Beams) (Fixed)
B354	Curved Plate Bearing Assembly (Steel Beams) (Fixed)
B355	Curved Plate Bearing Assembly (Steel Beams) (Expansion)
B400	Splices For Steel Beams (3309 Steel)
B402	Bolted Diaphragms (For Steel Beams)
B403	Steel Intermediate Diaphragm (For 36M - 54M, MN45 - MN63 Prestressed Concrete Beams)
B406	Steel Intermediate Bolted Diaphragm (For 63" – 81" Prestressed Concrete Beams)
B407	Cross Frame Intermediate Diaphragm (For Steel Beams)
B408	Cross Frame Intermediate Diaphragm (For Curved Steel Beams)
B410	Bolted Flange To Stiffener Detail (For Straight Steel Beams Only)
B411	Stiffener Details (For Steel Beams)
B553	Protection Plate (For End Of Slab)

*Refer to http://www.dot.state.mn.us/bridge/ for current Bridge CADD Standards

APPENDIX 2-D* (Continued)
BRIDGE DETAILS PART I (B-DETAILS)

NAME	DESCRIPTION
B701	Bridge Floor Drain (Welded Box)
B702	Bridge Floor Drain (Structural Tube)
B705	Bridge Offset Floor Drain (Welded Box)
B706	Bridge Offset Floor Drain (Structural Tube)
B710	Floor Drain For Tee Beams
B801	Contraction Joint
B807	Concrete End Diaphragm (For Double Tee Beam Spans With Pile Bent Abutment)
B809	Concrete End Diaphragm (For Steel Beams With Pile Bent Abutment)
B811	Concrete End Diaphragm (27M - 81M, MN45 - MN63 Prestressed Concrete Beams) (Contraction Abutment)
B812	Concrete End Diaphragm (63M – 81M Prestressed Concrete Beams) (Parapet Abutment)
B814	Concrete End Diaphragm (27M - 54M, MN45 – MN63 Prestressed Concrete Beams) (Parapet Abutment)
B816	Concrete End Diaphragm (14", 18" & 22" Rectangular Prestressed Concrete Beams) (Integral Abutment)
B822	Concrete Pier Diaphragm (For Double Tee Beams)
B830	Concrete Railing (Type F) (Slipform Alternate)
B831	Concrete Parapet Railing (Slipform Alternate)
B850	Concrete Relief Joint Detail (Bridge Reconstruction On Trunk Highway Bridges)
B901	Median Sign Post Anchor
B905	Fence Post Anchorage
B910	Drainage System (For High Abutments)
B911	Drainage System (For Slab Over Parapet Abutments) (With No Approach Treatment)
B920	Portable Precast Barrier Anchorage (Temporary Usage In Limited Barrier Displacement Areas)
B922	Portable Precast Barrier Anchorage (Temporary Usage On Roadways)
B935	Triple Beam Guardrail
B942	Inspection Door (In Vertical Or Horizontal Position)
B950	Anchor Bolt Cluster for Light Poles

*Refer to http://www.dot.state.mn.us/bridge/ for current Bridge CADD Standards

APPENDIX 2-E *
BRIDGE DETAILS PART II (STANDARD FIGURES)

NAME	DESCRIPTION
Fig. 5-397.114	Concrete Barrier (Type F, TL-4) With Separate End Post (Without Concrete Wearing Course)
Fig. 5-397.115	Concrete Barrier (Type F, TL-4) With Integral End Post (Without Concrete Wearing Course)
Fig. 5-397.116	Concrete Barrier (Type F, TL-4) With Separate End Post (With Concrete Wearing Course)
Fig. 5-397.117	Concrete Barrier (Type F, TL-4) With Integral End Post (With Concrete Wearing Course)
Fig. 5-397.119	Wire Fence (Design W-1) And Concrete Parapet (Type P-1) (With Integral End Post)
Fig. 5-397.120	Wire Fence (Design W-1) And Concrete Parapet (Type P-1) (With Separate End Post)
Fig. 5-397.122	Concrete Barrier (Type F, TL-5) With Integral End Post (With Conc. Wearing Course)
Fig. 5-397.124	Concrete Barrier (Type F, TL-5) With Integral End Post (Without Conc. Wearing Course)
Fig. 5-397.125	Concrete Barrier (Type F, TL-5) With Bridge Slab Sidewalk And Integral End Post (With Conc. Wearing Course)
Fig. 5-397.126	Concrete Barrier (Type F, TL-5) With Bridge Slab Sidewalk And Integral End Post (Without Conc. Wearing Course)
Fig. 5-397.128	Concrete Barrier (Type F, TL-5) With Glare Screen and Integral End Post (With Conc. Wearing Course)
Fig. 5-397.129	Concrete Barrier (Type F, TL-5) With Bikeway and Integral End Post (With Conc. Wearing Course)
Fig. 5-397.130	Solid Median Barrier – Type F (With Wearing Course)
Fig. 5-397.131	Split Median Barrier – Type F (With Wearing Course)
Fig. 5-397.132	Solid Median Barrier And Glare Screen – Type F (With Concrete Wearing Course)
Fig. 5-397.135	Split Median Barrier And Glare Screen – Type F (Without Concrete Wearing Course)
Fig. 5-397.136	Split Median Barrier And Glare Screen – Type F (With Concrete Wearing Course)
Fig. 5-397.137	Offset Split Median Barrier And Glare Screen – Type F (With Concrete Wearing Course)
Fig. 5-397.154	Metal Railing For Bikeways (Type M-1) And Concrete Parapet (Type P-1) (With Integral End Post)
Fig. 5-397.157	Structural Tube Railing (Design T-1) And Concrete Parapet (Type P-2, TL-4) (With Integral End Post)
Fig. 5-397.158	Structural Tube Railing (Design T-2) And Conc. Railing (Type F) Or Conc. Parapet (Type P-1)
Fig. 5-397.173	Concrete Barrier (Type P-4, TL-4) Integral End Post (With Conc. Wearing Course)
Fig. 5-397.202	5 Ft. Wire Fence (Design W-1) For Pedestrian Bridges

*Refer to http://www.dot.state.mn.us/bridge/ for current Bridge CADD Standards

APPENDIX 2-E * (Continued)
BRIDGE DETAILS PART II (STANDARD FIGURES)

NAME	DESCRIPTION
Fig. 5-397.300	Grouted Injected Fabric Formed Slope Paving
Fig. 5-397.301	Concrete Slope Paving Under Bridges
Fig. 5-397.302	Stabilized Aggregate Slope Paving Under Bridges
Fig. 5-397.402	Conduit System For _____
Fig. 5-397.403	Conduit System (Lighting) – Type F (Or Concrete Parapet and Fence Railing)
Fig. 5-397.504	27" Prestressed Concrete Beam (Pretensioned) 27M-_____
Fig. 5-397.505	36" Prestressed Concrete Beam (Pretensioned) 36M-_____
Fig. 5-397.507	MN45" Prestressed Concrete Beam (Pretensioned) MN45-_____
Fig. 5-397.508	MN54" Prestressed Concrete Beam (Pretensioned) MN54-_____
Fig. 5-397.509	MN63" Prestressed Concrete Beam (Pretensioned) MN63-_____
Fig. 5-397.514	45" Prestressed Concrete Beam (Pretensioned) 45M-_____
Fig. 5-397.515	54" Prestressed Concrete Beam (Pretensioned) 54M-_____
Fig. 5-397.516	63" Prestressed Concrete Beam (Pretensioned) 63M-_____
Fig. 5-397.517	72" Prestressed Concrete Beam (Pretensioned) 72M-_____
Fig. 5-397.518	81" Prestressed Concrete Beam (Pretensioned) 81M-_____
Fig. 5-397.525	22" Prestressed Concrete Double Tee Beam Type 22-___ 6' Or 8' Wide Tee Without Slab
Fig. 5-397.526	30" Prestressed Concrete Double Tee Beam Type 30-___ 6' Or 8' Wide Tee Without Slab
Fig. 5-397.550	14", 18" & 22" Rectangular Prestressed Concrete Beam (Pretensioned) ___ RB-_____
Fig. 5-397.627	Waterproof Expansion Device (With Type F Barrier)
Fig. 5-397.628	Waterproof Expansion Device Snow Plow Protection (Use On Skews Over 15° And Less Than 50°)
Fig. 5-397.630	Waterproof Expansion Device (With Raised Median Or Sidewalk)
Fig. 5-397.900	As-Built Bridge Data

*Refer to http://www.dot.state.mn.us/bridge/ for current Bridge CADD Standards

APPENDIX 2-F *
BRIDGE STANDARD PLANS: CULVERTS

NAME	DESCRIPTION
Fig. 5-395.100	Precast Concrete Box Culvert Tables *2 Sheets*
Fig. 5-395.101(A)	Barrel Details
Fig. 5-395.101(B)	Barrel Details (Special Design)
Fig. 5-395.102	Precast Concrete End Section Type I – Single Or Double Barrel For Skews Up To $7^1/_2°$
Fig. 5-395.104(A)	Precast Concrete End Section Type III – Single Or Double Barrel For Skews Up To $7^1/_2°$
Fig. 5-395.104(B)	Precast Concrete End Section Type III – Single Or Double Barrel For Skews Up To $7^1/_2°$
Fig. 5-395.110(A)	Precast Concrete End Section Type III – Single Or Double Barrel For Skews $7^1/_2°$ To 45°
Fig. 5-395.110(B)	Precast Concrete End Section Type III – Single Or Double Barrel For Skews $7^1/_2°$ To 45°
Fig. 5-395.111	Alternate Dropwalls For Box Culverts
Fig. 5-395.115	Embankment Protection For Box Culverts

*Refer to http://www.dot.state.mn.us/bridge/ for current Bridge CADD Standards

APPENDIX 2-G
Mn/DOT STANDARD PLANS: SPECIAL STRUCTURES

NAME	DESCRIPTION
Fig. 5-297.620	Retaining Wall General Notes And Summary Of Quantities
Fig. 5-297.621	Retaining Wall Reinforcement Details (Short Walls)
Fig. 5-297.622	Retaining Wall Reinforcement Details (Medium Walls) (Panels __-__)
Fig. 5-297.623	Retaining Wall Reinforcement Details (Tall Walls) (Panels __-__)
Fig. 5-297.624	Retaining Wall Miscellaneous Details *3 Sheets*
Fig. 5-297.625	Retaining Wall Shear Key Details
Fig. 5-297.626	Retaining Wall Panel Tabulations (Level Fill) *4 Sheets*
Fig. 5-297.627	Retaining Wall Panel Tabulations (1:2 Sloped Fill) *4 Sheets*
Fig. 5-297.628	Retaining Wall Panel Tabulations (Live Load Surcharge) *4 Sheets*
Fig. 5-297.629	Retaining Wall Spread Footing Reinforcement Details
Fig. 5-297.630	Retaining Wall (Level Fill) *4 Sheets*
Fig. 5-297.631	Retaining Wall (1:2 Sloped Fill) *4 Sheets*
Fig. 5-297.632	Retaining Wall (Live Load Surcharge) *4 Sheets*
Fig. 5-297.633	Retaining Wall Concrete Parapet Barrier
Fig. 5-297.634	Retaining Wall Concrete Barrier (Type F, TL-4)
Fig. 5-297.635	Retaining Wall Light Standard Anchorage

Refer to http://www.dot.state.mn.us/tecsup/splan/index.html
for current Retaining Wall Standards

APPENDIX 2-H
STANDARD PLAN NOTES

A. DESIGN DATA

2007 and Current Interim AASHTO LRFD Bridge Design Specifications ||
Load and Resistance Factor Design Method
HL 93 Live Load
Dead Load includes 20 pounds per square foot allowance for future wearing course modifications

Material Design Properties:

Reinforced Concrete:

f'_c	=	4 ksi	n = 8
F_y	=	60 ksi	for reinforcement

Prestressed Concrete:

f'_c	=	_____ ksi	n = 1 (Coordinate with beam detail sheet)
f_{pu}	=	270 ksi	For ½" and 0.6" diameter low relaxation strands

Structural Steel:

F_y	=	36 ksi	Structural Steel Spec. 3306
F_y	=	50 ksi	Structural Steel Spec. 3309 or 3310
F_y	=	70 ksi	Structural Steel Spec. 3317

Cycles for Fatigue Design - _____

Timber:

F_c	=	1.20 ksi	Pile Caps
F_b	=	1.60 ksi	Sawn Stringers and Timber Rails
F_b	=	2.40 ksi	Glued Laminated Timber Rails
F_b	=	2.40 ksi	Glued Laminated Stringers
F_b	=	_____ ksi	
F_b	=	1.75 ksi	Rail Posts
F_b	=	1.20 ksi	All Other Timber

Deck Area = _____ square feet
[Coping to Coping and Out to Out of end blocks]
_____ (Projected, Current) ADT for year _____
_____ (Projected, Current) ADTT for year _____
Design Speed = _____ miles per hour
Bridge Operating Rating HS _____

B. CONSTRUCTION NOTES

The 2005 edition of the Minnesota Department of Transportation *Standard Specifications for Construction* shall govern. ||

APPENDIX 2-H (Continued)
STANDARD PLAN NOTES

Bridge seat reinforcement shall be carefully placed to avoid interference with drilling holes for anchor rods. The beams shall be erected in final position prior to drilling holes for and placing anchor rods.

The first two digits of each bar mark indicate the bar size. Bars marked with the suffix "E" shall be epoxy coated in accordance with Spec. 3301.

The pile loads shown in the plans and the corresponding nominal pile bearing resistance (R_n) were computed using LRFD methodology. Pile bearing resistance determined in the field shall incorporate the methods and/or formulas described in the Special Provisions.

The subsurface utility information in this plan is utility quality level D. This utility quality level was determined according to the guidelines of CI/ASCE 38-02, entitled "Standard Guidelines for the Collection and Depiction of Existing Subsurface Utility Data".

[Use on all plans involving excavation.]

[The signature title in the title block on the General Plan and Elevation sheet shall be as follows:]

Approved _____ Date _____
State Bridge Engineer

C. DRAINAGE AND EROSION CONTROL

3" diameter non-metallic drains.

[Use this note for weep holes in high wall abutments]

Restore side ditches after placement of slope paving to provide drainage as directed by the Engineer. Restoration costs shall be included in price bid for Structure Excavation.

[Use this note on railroad underpass.]

_____ pipe to be placed under grading portion of contract.

[Use this note with combined Bridge and Roadway contracts only. Modify the notes to suit job requirements.]

APPENDIX 2-H (Continued)
STANDARD PLAN NOTES

D. EXCAVATION AND EARTHWORK

Quantity of Structure Excavation for payment is computed with the elevation shown for each substructure unit as the upper limit. Excavation above these elevations will be paid for under the grading portion of the contract.

[Specify an elevation for top of exposed or buried rock and add the note: average elevations of top of rock are assumed for estimated plan quantities. Use this note when rock and other type excavation will be encountered. Do not use this note when lump sum payment for structure excavation is used.

The lower limits of structure excavation Class E shall be the same as the upper limits of structure excavation Class WE except for rock excavations.

Construction of each abutment shall not be started until the approach fill at that abutment has been constructed to the full height and cross section (and allowed to settle for _____ days).

Roadway (or channel) excavation will be made by others in advance of bridge construction.

[Not applicable on combined project.]

Footings shall be keyed into sound bedrock as directed by the Engineer. Top of footings shall have a minimum of 1'-0" cover.

Contractor shall dress slopes and place filter materials and riprap in approximate areas as directed by the Engineer.

E. REINFORCEMENT

Spiral Data

Outside Diameter _____

Height _____

Pitch _____

Spiral Rod Size _____ Plain Round

Weight _____ each

Outside diameter of dowel circle to be $2^1/_4$" less than inside diameter of spiral.

[Where No. 32E and larger sized column vertical bars are used, the $2^1/_4$" dimension should be increased where required to provide for a proper fit.]

APPENDIX 2-H (Continued)
STANDARD PLAN NOTES

F. PILING AND FOOTINGS

ON SPREAD FOOTING

_____ ABUTMENT Spread Footing Load Data	
* Factored Design Bearing Pressure	__ tons/sq ft
Effective Width B'	__ ft
Factored Bearing Resistance $\varphi_b \cdot q_n$	__ tons/sq ft

* Based on _____ load combination.

ON SPREAD FOOTING

PIER _____ Spread Footing Load Data	
* Factored Design Bearing Pressure	__ tons/sq ft
Effective Width B' (Perpendicular to Pier)	__ ft
Effective Length L' (Parallel to Pier)	__ ft
Factored Bearing Resistance $\varphi_b \cdot q_n$	__ tons/sq ft

* Based on _____ load combination.

WITH PILING

_____ ABUTMENT Computed Pile Load – Tons/Pile	
Factored Dead Load + Earth Pressure	
Factored Live Load	
* Factored Design Load	

* Based on _____ load combination.

WITH PILING

PIER _____ Computed Pile Load – Tons/Pile	
Factored Dead Load	
Factored Live Load	
Factored Overturning	
* Factored Design Load	

* Based on _____ load combination.

_____ ABUTMENT REQUIRED NOMINAL PILE BEARING RESISTANCE R_n – Tons/Pile		
FIELD CONTROL METHOD	φ_{dyn}	* R_n
Mn/DOT Nominal Resistance Formula	0.40	
PDA	0.65	

* R_n = (Factored Design Load) / φ_{dyn}

PIER _____ REQUIRED NOMINAL PILE BEARING RESISTANCE R_n – Tons/Pile		
FIELD CONTROL METHOD	φ_{dyn}	* R_n
Mn/DOT Nominal Resistance Formula	0.40	
PDA	0.65	

* R_n = (Factored Design Load) / φ_{dyn}

APPENDIX 2-H (Continued)
STANDARD PLAN NOTES

Pile Notes [substructure with Test Piles]

_____ ___*___ Test Piles _____ ft. long
_____ ___*___ Piles est. length _____ ft.
_____ ___*___ Piles req'd for _____

[* Specify - treated timber, untreated timber, steel, or cast-in-place concrete.]

Pile Notes [substructure without Test Piles]

_____ ___*___ Piles _____ ft. long req'd for _____

[* Specify - treated timber, untreated timber, steel, or cast-in-place concrete.]

Pile Notes [substructure with Special Pay items]

_____ ___*___ Piles est. length _____ ft. req'd for _____

[* Specify - steel or cast-in-place.]

General Pile Notes

Pile spacing shown is at bottom of footing.
[Use for all piling.]

Piles marked thus (O-> , H->) to be battered ____ per ft. in direction shown.
[Use for all battered piling.]

All piles to be HP - ____.
[Use with all steel H piling.]

Piles to have a nominal diameter of _____.
[Use with all cast-in-place concrete piling.]

For pile splice details see B-Detail (B201 [CIP], B202 [steel]).

G. MATERIALS, FABRICATION AND ERECTION

(Use standard notes that are relevant to the project)

All structural steel shall conform to Spec. (3306, 3309, 3310, 3316, or 3317) unless otherwise noted.

Shear studs on the top flange of the girder shall be installed in the field.

Chord line in camber diagram is a straight line from end to end of beam segment at bottom of top flange.

APPENDIX 2-H (Continued)
STANDARD PLAN NOTES

The maximum residual camber in Span _____ is ___ inches at the _____ point of the span.

The maximum residual camber is _____". It is located at _____.

Special assembly per Spec. 2471 will be required for the beam splices. The section to be special assembled shall be from _____ to _____ .

[Check with the Structural Metals Unit; Abutment to abutment if < 300 ft. Three adjacent points of support if > 300 ft.]

For welded flange splices, see Spec 2471.3F1a.

[Use drawings only if different than Bridge Welding Code 2002 Fig. 2.7 or 2.8]

Full assembly will be required per Spec. 2471.3H1b and 2471.3J2.

[The use of full assembly should be considered for extremely complicated curved, superelevated structures (i.e. grid analysis used for design). Check with the Structural Metals Unit and Fabrication Methods Unit.]

Web plates shall be furnished in available mill lengths and widths with a minimum number of web splices. Location of splices shall be subject to the approval of the Engineer and shall be a minimum of 1'-0" from stiffeners or flange splices.

Bearing stiffeners and ends of beams shall be perpendicular to flange.

[For rolled beams or grades ≤ 3%.]

Bearing stiffeners at abutments shall be vertical. Bearing stiffeners at piers shall be perpendicular to flange. Ends of beams shall be vertical.

[For grades greater than 3% on plate girder bridges or skews greater than 20°. Check web crippling at pier if grade is greater than 3%.]

Rows of shear connectors shall be aligned parallel to the transverse slab reinforcement bars.

[For bridge skews over 0° but less than 20°.]

Shear connectors to project a minimum of 2" into deck structural slab. In no case shall shear connectors project closer than 1" to top of deck structural slab. Engineer to field verify beam elevation and authorize stud length.

Shear connectors to be included in weight of Structural Steel (3306, 3309, 3310) and conform to Spec. 3391.

APPENDIX 2-H (Continued)
STANDARD PLAN NOTES

Flange plates for beams shall be cut to proper curvature.
[Check requirements of AASHTO Standard Specifications Section 10.15.2 to see if heat curving is feasible.]

Camber diagram shown is for beams in unloaded position and provides for all dead load deflections and residual camber.

All bolted connections shall be made with $^{7}/_{8}$" diameter A325 bolts, except as noted.

Elevations given at field splices are taken at top of top flange splice plate.

Elevations shown at field splices are theoretical elevations furnished as a guide for erection.
[Deflections from weight of beam and diaphragm are included.]

Deflections shown are for weight of slab, concrete overlay, railing, (median and sidewalk). Negative sign indicates uplift.
[Do not include the weight of steel beams or future wearing course.]

H. CONCRETE PLACEMENTS

Cast counter weight at least 48 hours in advance of placing deck slab.

Make saw cut in structural slab (and concrete wearing course) over centerline of piers as soon as the cutting can be done without raveling the concrete. Apply polystyrene to tips of flanges that project past centerline of pier. Seal joint per Spec. 3723.
[Use on prestressed concrete beam bridges with double diaphragms and slab continuous over piers. Saw cut both structural slab and concrete wearing course. See Figure 9.2.1.8 in this manual for detail.]

I. WELDED STEEL BEARING ASSEMBLIES

Structural steel shall conform to Spec. 3306 except as noted.

Shims to be included in price bid for bearing assemblies.
[Add to B Detail if shims are used.]

Pins and rollers shall conform to Spec. 2471.3D5.

Pins shall be cold finished alloy bar steel per Spec. 3314 Type II.
[For pins 5" or less where pin is not made from a larger diameter stock.]

APPENDIX 2-H (Continued)
STANDARD PLAN NOTES

Pins shall be hot rolled bar alloy bar steel per Spec. 3313 Type II.
[For pins over 5" where pin will be made from a larger diameter stock.]

Pintles shall conform to Spec. 3309 or 3310.

Lubricated bronze bushings shall conform to Spec. 3329.

All welded bearing assemblies shall be annealed after welding. Pin holes and top and bottom plates shall be finished after annealing.
[For welded rockers and bolsters.]

Pins and pin holes shall be coated, in the shop, with a heavy protective grease. Prior to erection, the pins and pin holes shall be cleaned and coated with an approved grease.

The price bid for bearing assembly shall include all material (anchor rods, sheet lead, bearing, and bolts for attaching bearing to beam) for each type as shown.

J. CUTTING AND REMOVAL OF OLD CONCRETE

Hatched areas indicate concrete to be removed.

No cutting will be permitted until the cutting limits have been outlined by the Contractor and approved by the Engineer. Removal and reconstruction shall conform to Spec. 2433.

K. JOINTS AND JOINT SEALER

Finish top of all sidewalk and median joints with $^1/_4$" radius edger, and vertical edges with $^1/_2$" V strips.

Break bond at joint by approved method. No reinforcement through joint.
[Use for concrete sections less than 12" in height.]

Superstructure dimensions are based on the expansion joint dimension at 90° F.
[Use when superstructure details show more than one expansion joint dimension for different temperatures.]

L. TIMBER BRIDGES

Construction requirements per Spec. 2403.3.

All timber piling to meet requirements of Spec. 3471.

APPENDIX 2-H (Continued)
STANDARD PLAN NOTES

All hardware to be galvanized per Spec. 3392.

All timber to be rough unless otherwise noted.

Top of wing pile which projects outside of wing cap shall be shaped to a 45° slope.

Treat tops of bearing and wing piles per Spec. 2452.3F. See Spec. 3491 for preservation requirements.

Fill in back of abutment is not to be placed until after superstructure has been completed.

Fasten backing to abutment piles with two 60d nails at each intersection.

Bolt projections exceeding 1" shall be cut off. Repair end of bolt by painting with an approved zinc-rich primer.

Drive all piles to a bearing of not less than _____ tons per pile. See Special Provisions for wing wall pile driving requirements.

All timber shall be preservative treated in accordance with Spec. 3491.

M. MISCELLANEOUS

The Contractor shall make field measurements as necessary prior to fabrication of the _____ to assure proper fit in the final work.

[Use when not otherwise referenced to Spec.2433.]

Beam length dimensions are slope lengths.

[Use where necessary for proper fit for prestressed beams.]

APPENDIX 2-I
STANDARD SUMMARY OF QUANTITIES NOTES

1. State will furnish disk. Bend prongs outward to anchor disk in concrete. Bottom of disk top to be placed flush with concrete. Payment for placing shall be considered incidental to concrete pay items.
   [When bench mark disk is required.]

2. Payment shall be considered incidental to item "_____".
   [For incidental quantities not listed as pay items (joint filler, waterproofing, nameplate, etc.). Fill in blank with appropriate pay item (e.g. for three-ply joint waterproofing: Payment shall be considered incidental to item "Structural Concrete (3Y43))".]

3. Included in weight of "Structural Steel (33__)".
   [Miscellaneous steel quantities (protection angle, etc.).]

4. Does not include test piles.
   [When piling quantities are listed.]

5. Includes slab (,end diaphragm, median barrier, sidewalk,) and railing reinforcement.
   [Add to epoxy coated reinforcement bar totals.]

6. "Bridge Slab Concrete (3Y3_)" volume was computed using an average stool height of _____ inches. Item includes approximately _____ cubic yards for slab (and end blocks and approximately _____ cubic yards for end diaphragms).
   [Use when the item as listed in the Summary of Quantities for Superstructure is paid for on a square foot basis.]

7. "Concrete Wearing Course (3U17A)" volume is approximately _____ cubic yards. Item includes _____ square feet for bridge approach panels.
   [Use when the item as listed in the Summary of Quantities for Superstructure is paid for on a square foot basis.]

8. "Type _____ Railing Concrete (3Y46(A))" volume is approximately _____ cubic yards.
   [Use when the item as listed in the Summary of Quantities for Superstructure is paid for on a linear foot basis.]

9. "Sidewalk Concrete (3Y46(A))" volume is approximately _____ cubic yards.
   [Use when the item as listed in the summary of Quantities for Superstructure is paid for on a square foot basis.]

APPENDIX 2-I (Continued)
STANDARD SUMMARY OF QUANTITIES NOTES

10. "Median Barrier Concrete (3Y46(A))" volume is approximately _____ cubic yards.
    [Use when the item as listed in the Summary of Quantities for Superstructure is paid for on a linear foot basis.]

11. "Raised Median Concrete (3Y46(A))" volume is approximately _____ cubic yards.
    [Use when the item as listed in the Summary of Quantities for Superstructure is paid for on a square foot basis.]

12. Payment for bearings included in item "Bearing Assembly" per each.

13. Quantities listed above are for informational purposes. Any additional minor items and slight changes in quantities required shall be furnished by the contractor with no additional compensation.
    [Use with summaries of quantities for items paid for by lump sum. (e.g. conduit systems).]

14. Payment for anchorages included in item "Anchorages Type Reinf. Bars" per each.

15. Payment for threaded couplers included in item "Couplers (Reinforcement Bars) T-_*_" per each.
    [* Specify – metric bar size.]

APPENDIX 2-J *
BRIDGE PAY ITEMS

ITEM NO.	ITEM	UNIT	QUANTITY
2013.602	TCLP TEST	EACH	_____ (P)
2021.501	MOBILIZATION	LUMP SUM	_____
2031.501	FIELD OFFICE TYPE _____	EACH	_____
2031.503	FIELD LABORATORY TYPE _____	EACH	_____
2041.610	TRAINEES	HOUR	_____
2102.501	PAVEMENT MARKING REMOVAL	SQ. FT.	_____
2105.601	[1] _____ LANE BYPASS ([2] _____ LANE)	LUMP SUM	_____
2301.601	BRIDGE APPROACH PANELS	LUMP SUM	_____
2331.604	_____ " THICK BITUMINOUS WEARING COURSE	SQ. YD	_____ (P)[3]
2357.502	BITUMINOUS MATERIAL FOR TACK COAT	GALLON	_____
2401.501	STRUCTURAL CONCRETE (_____)	CU. YD.	_____ (P)[3]
2401.511	STRUCTURAL CONCRETE (_____)	SQ. FT.	_____ (P)[3]
2401.512	BRIDGE SLAB CONCRETE (_★_) [★ 3Y33(A) or 3Y36(A)]	SQ. FT.	_____ (P)
2401.513	TYPE _____ RAILING CONCRETE (3Y46(A))	LIN. FT.	_____ (P)
2401.514	MEDIAN BARRIER CONCRETE (3Y46(A))	LIN. FT.	_____ (P)
2401.514	SPLIT MEDIAN BARRIER CONC (3Y46(A))	LIN. FT.	_____ (P)
2401.514	SPLIT MEDIAN BARRIER WITH GLARE SCREEN CONCRETE (3Y46(A))	LIN. FT.	_____ (P)
2401.515	SIDEWALK CONCRETE (3Y46(A))	SQ. FT.	_____ (P)
2401.516	RAISED MEDIAN CONCRETE (3Y46(A))	SQ. FT.	_____ (P)
2401.521	STRUCTURE EXCAVATION CLASS R	CU. YD.	_____
2401.541	REINFORCEMENT BARS	POUND	_____ (P)
2401.541	REINFORCEMENT BARS (EPOXY COATED)	POUND	_____ (P)
2401.543	SPIRAL REINFORCEMENT (EPOXY COATED)	POUND	_____ (P)
2401.601	FOUNDATION PREPARATION _____	LUMP SUM	_____
2401.601	STRUCTURE EXCAVATION	LUMP SUM	_____
2401.608	SHAFT REINFORCEMENT	POUND	_____
2411.618	REVERSE BATTEN SURFACE TREATMENT	SQ. FT.	_____ (P)
2401.618	SPECIAL SURFACE FINISH (INPLACE)	SQ. FT	_____
2402.521	STRUCTURAL STEEL (_★_) [★ 3306, 3309 or 3317]	POUND	_____ (P)
2402.546	FLOOR DRAIN TYPE _____	EACH	_____
2402.583	ORNAMENTAL METAL RAILING TYPE _____	LIN. FT.	_____ (P)
2402.583	STRUCTURAL TUBE RAILING DESIGN _____	LIN. FT.	_____ (P)
2402.583	METAL RAILING FOR BIKEWAYS TYPE M-1	LIN. FT.	_____ (P)
2402.583	METAL FISHING RAIL TYPE M-X	LIN. FT.	_____ (P)
2402.585	PIPE RAILING	LIN. FT.	_____ (P)
2402.590	ELASTOMERIC BEARING PAD TYPE _____	EACH	_____

*Refer to http://bidlet.dot.state.mn.us/english2005.aspx for current Pay Items

APPENDIX 2-J * (Continued)
BRIDGE PAY ITEMS

ITEM NO.	ITEM	UNIT	QUANTITY
2402.591	EXPANSION JOINT DEVICES TYPE _____	LIN. FT.	_____ (P)
2402.595	BEARING ASSEMBLY	EACH	_____
2402.601	[Use for Miscellaneous Items]	LUMP SUM	_____
2402.601	DRAINAGE SYSTEM (ABUTMENTS)	LUMP SUM	_____
2402.602	[Use for Miscellaneous Items]	EACH	_____
2402.603	STRUCTURAL TUBE RAILING WITH FENCE DES_____	LIN. FT.	_____ (P)
2402.603	[Use for Miscellaneous Items]	LIN. FT.	_____ (P)[3]
2403.510	GLUED LAMINATED DECK PANELS TYPE _____	EACH	_____
2403.602	GLUED LAMINATED STRINGERS TYPE _____	EACH	_____
2403.602	PREFAB TIMBER PANELS TYPE _____	EACH	_____
2403.603	GLUED LAMINATED RAIL TYPE 1	LIN. FT.	_____ (P)
2403.603	TIMBER RAILING	LIN. FT.	_____ (P)
2404.501	CONCRETE WEARING COURSE (3U17A)	SQ. FT.	_____ (P)
2404.618	BLASTING (SPECIAL)	SQ. FT.	_____ (P)
2404.618	CONCRETE WEARING COURSE (3U17A) _____ "	SQ. FT.	_____ (P)
2405.502	PRESTRESSED CONCRETE BEAMS _____	LIN. FT	_____ (P)
2405.511	DIAPHRAGMS FOR TYPE _____ PRESTRESSED BEAMS	LIN. FT	_____ (P)
2405.603	PRESTRESSED CONC. DOUBLE TEE-BEAM TYPE _____ "	LIN. FT.	_____ (P)
2411.618	ARCHITECTURAL CONCRETE TEXTURE (ASHLAR STONE)	SQ. FT.	_____ (P)
2411.618	ARCHITECTURAL CONCRETE TEXTURE (CUT STONE)	SQ. FT.	_____ (P)
2411.618	ARCHITECTURAL CONCRETE TEXTURE (FIELDSTONE)	SQ. FT.	_____ (P)
2411.618	ARCHITECTURAL CONCRETE TEXTURE (FRACTURED FIN)	SQ. FT.	_____ (P)
2411.618	ARCHITECTURAL CONCRETE TEXTURE (FRACTURED GRANITE)	SQ. FT.	_____ (P)
2411.618	ARCHITECTURAL CONCRETE TEXTURE (RANDOM BATTEN)	SQ. FT.	_____ (P)
2411.618	ARCHITECTURAL SURFACE FINISH (SINGLE COLOR)	SQ. FT.	_____ (P)
2411.618	ARCHITECTURAL SURFACE FINISH (MULTI-COLOR)	SQ. FT.	_____ (P)
2411.618	ANTI-GRAFFITI COATING	SQ. FT.	_____ (P)
2412.511	_____ PRECAST CONCRETE BOX CULVERT	LIN. FT.	_____ (P)
2412.512	_____ PRECAST CONCRETE BOX CULVERT END SECTION	EACH	_____
2433.501	STRUCTURAL REMOVALS	LUMP SUM	_____
2433.502	REMOVE CONCRETE	CU. YD.	_____ (P)[3]
2433.503	REMOVE STRUCTURAL METALS	POUND	_____ (P)[3]
2433.505	REMOVE _____	SQ. FT.	_____ (P)[3]
2433.506	REMOVE _____	LIN. FT.	_____ (P)[3]
2433.507	REMOVE _____	LUMP SUM	_____
2433.512	PLACE USED TRUSS	LUMP SUM	_____
2433.516	ANCHORAGES TYPE _____	EACH	_____

*Refer to http://bidlet.dot.state.mn.us/english2005.aspx for current Pay Items

APPENDIX 2-J * (Continued)
BRIDGE PAY ITEMS

ITEM NO.	ITEM	UNIT	QUANTITY
2433.601	REPAIR _____	LUMP SUM	_____
2433.601	RECONSTRUCT _____	LUMP SUM	_____
2433.602	REPAIR _____	EACH	_____
2433.602	RECONSTRUCT _____	EACH	_____
2433.602	CLEAN _____	EACH	_____
2433.602	GREASE EXP BRG ASSEMBLIES TYPE _____	EACH	_____
2433.603	RECONSTRUCT (_★_) JOINT TYPE ___ (★ EXP., FIX, PAVEMENT)	LIN. FT.	_____ (P)
2433.603	REPAIR _____	LIN. FT.	_____
2433.603	RECONSTRUCT _____	LIN. FT.	_____
2433.607	CEMENT GROUT	CU. YD.	_____
2433.618	SCARIFY _____	SQ. FT.	_____
2433.618	BRIDGE SURFACE SEALER	SQ. FT.	_____
2442.501	REMOVE EXISTING BRIDGE _____	LUMP SUM	_____
2442.502	SALVAGE AND HAUL MATERIAL (BRIDGE)	LUMP SUM	_____
2451.503	GRANULAR BACKFILL (_★_) [★ CV OR LV]	CU. YD.	_____ (P)
2451.505	AGGREGATE BACKFILL (_★_) [★ CV OR LV]	CU. YD	_____ (P)
2452.503	TREATED TIMBER PILING DELIVERED	LIN. FT	_____
2452.504	TREATED TIMBER PILING DRIVEN	LIN. FT	_____
2452.507	C-I-P CONCRETE PILING DELIVERED [4] _____ "	LIN. FT.	_____
2452.508	C-I-P CONCRETE PILING DRIVEN [4] _____ "	LIN. FT	_____
2452.510	STEEL H-PILING DRIVEN [5] _____ "	LIN. FT	_____
2452.511	STEEL H-PILING DELIVERED [5] _____ "	LIN. FT	_____
2452.517	TREATED TIMBER TEST PILE 25' LONG	EACH	_____
2452.519	C-I-P CONCRETE TEST PILE _____ FT LONG [4] _____ "	EACH	_____
2452.520	STEEL H-TEST PILE _____ FT LONG [5] _____ "	EACH	_____
2452.526	PILE LOAD TEST TYPE _____	EACH	_____
2452.602	DRILLED SHAFT LOAD TEST TYPE _____	EACH	_____
2452.602	PILE ANALYSIS	EACH	_____
2452.602	PILE PLACEMENT	EACH	_____
2452.602	PILE POINTS _____ "	EACH	_____
2452.602	PILE REDRIVING	EACH	_____
2452.602	PILE TIP PROTECTION _____ "	EACH	_____
2452.602	STRUCTURAL INTEGRITY TEST	EACH	_____
2452.603	_____ " STEEL PILE SHELLS	LIN. FT.	_____
2452.603	C-I-P CONCRETE PILING __" FLUTED FURNISH & DRIVEN	LIN. FT.	_____
2453.603	___" DIA CASING	LIN. FT.	_____
2453.603	___" DIA DRILLED SHAFT (_____)	LIN. FT.	_____

*Refer to http://bidlet.dot.state.mn.us/english2005.aspx for current Pay Items

APPENDIX 2-J * (Continued)
BRIDGE PAY ITEMS

ITEM NO.	ITEM	UNIT	QUANTITY
2472.602	COUPLERS (REINFORCEMENT BARS) T- [6] _____	EACH	_____
2476.501	PAINTING METAL STRUCTURES	LUMP SUM	_____
2476.502	PAINTING METAL STRUCTURES	SQ. FT.	_____
2476.601	LEAD SUBSTANCES COLLECTION & DISPOSAL	LUMP SUM	_____ (P)
2476.601	WASTE COLLECTION AND DISPOSAL	LUMP SUM	_____ (P)
2478.502	EPOXY ZINC-RICH PAINT SYSTEM (SHOP)	SQ. FT.	_____
2478.503	EPOXY ZINC-RICH PAINT SYSTEM (FIELD)	LUMP SUM	_____
2478.506	EPOXY ZINC-RICH PAINT SYSTEM (OLD)	SQ. FT	_____ (P)
2478.618	EPOXY ZINC-RICH PAINT SYSTEM (NEW)	SQ. FT.	_____
2479.618	INORGANIC ZINC-RICH PAINT SYSTEM (FIELD)	SQ. FT.	_____ (P)
2479.618	SHOP APPLIED INORGANIC ZINC-RICH PRIMER	SQ. FT.	_____ (P)
2511.501	RANDOM RIPRAP CLASS _____	CU. YD.	_____ (P)
2511.507	GROUTED RIPRAP	CU. YD.	_____
2511.511	GRANULAR FILTER	CU. YD.	_____ (P)
2514.501	CONCRETE SLOPE PAVING	SQ. YD.	_____ (P)
2514.503	AGGREGATE SLOPE PAVING	SQ. YD	_____ (P)
2545.501	ELECTRIC LIGHT SYSTEM	LUMP SUM	_____
2545.509	CONDUIT SYSTEM (_★_) [★ LIGHTING, SIGNALS, TELEPHONE, or POWER]	LUMP SUM	_____
2557.501	WIRE FENCE DESIGN _____	LIN. FT.	_____ (P)
2557.603	CHAIN LINK ENCLOSURE	LIN. FT	_____ (P)
2563.601	TRAFFIC CONTROL	LUMP SUM	_____
2563.613	[Use for Traffic Control Devices]	UNIT DAY	_____
2564.603	4" _____ LINE _____-POLY PREFORMED	LIN. FT.	_____

(P) Denotes plan quantity pay items as per Spec. 1901.

[1] Number of Lanes

[2] Actual Lane Width

[3] Plan quantity may or may not be used for payment

[4] Diameter of Pile

[5] Size and Weight

[6] Metric Bar Size

*Refer to http://bidlet.dot.state.mn.us/english2005.aspx for current Pay Items

APPENDIX 2-K

CONVERSION FROM INCHES TO DECIMALS OF A FOOT

	0"	1"	2"	3"	4"	5"		6"	7"	8"	9"	10"	11"	
0	.0000	.0833	.1667	.2500	.3333	.4167	0	.5000	.5833	.6667	.7500	.8333	.9167	0
1/16	.0052	.0885	.1719	.2552	.3385	.4219	1/16	.5052	.5885	.6719	.7552	.8385	.9219	1/16
1/8	.0104	.0938	.1771	.2604	.3438	.4271	1/8	.5104	.5938	.6771	.7604	.8438	.9271	1/8
3/16	.0156	.0990	.1823	.2656	.3490	.4323	3/16	.5156	.5990	.6823	.7656	.8490	.9323	3/16
1/4	.0208	.1042	.1875	.2708	.3542	.4375	1/4	.5208	.6042	.6875	.7708	.8542	.9375	1/4
5/16	.0260	.1094	.1927	.2760	.3594	.4427	5/16	.5260	.6094	.6927	.7760	.8594	.9427	5/16
3/8	.0313	.1146	.1979	.2813	.3646	.4479	3/8	.5313	.6146	.6979	.7813	.8646	.9479	3/8
7/16	.0365	.1198	.2032	.2865	.3698	.4531	7/16	.5365	.6198	.7032	.7865	.8698	.9531	7/16
1/2	.0417	.1250	.2083	.2917	.3750	.4583	1/2	.5417	.6250	.7083	.7917	.8750	.9583	1/2
9/16	.0469	.1302	.2135	.2969	.3802	.4635	9/16	.5469	.6302	.7135	.7969	.8802	.9635	9/16
5/8	.0521	.1354	.2188	.3021	.3854	.4688	5/8	.5521	.6354	.7188	.8021	.8854	.9688	5/8
11/16	.0573	.1406	.2240	.3073	.3906	.4740	11/16	.5573	.6406	.7240	.8073	.8906	.9740	11/16
3/4	.0625	.1458	.2292	.3125	.3958	.4792	3/4	.5625	.6458	.7292	.8125	.8958	.9792	3/4
13/16	.0677	.1510	.2344	.3177	.4010	.4844	13/16	.5677	.6510	.7344	.8177	.9010	.9844	13/16
7/8	.0729	.1563	.2396	.3229	.4063	.4896	7/8	.5729	.6563	.7396	.8229	.9063	.9896	7/8
15/16	.0781	.1615	.2448	.3281	.4115	.4948	15/16	.5781	.6615	.7448	.8281	.9115	.9948	15/16
	0"	1"	2"	3"	4"	5"		6"	7"	8"	9"	10"	11"	

CONVERSION TABLE
INCHES TO DECIMALS OF A FOOT