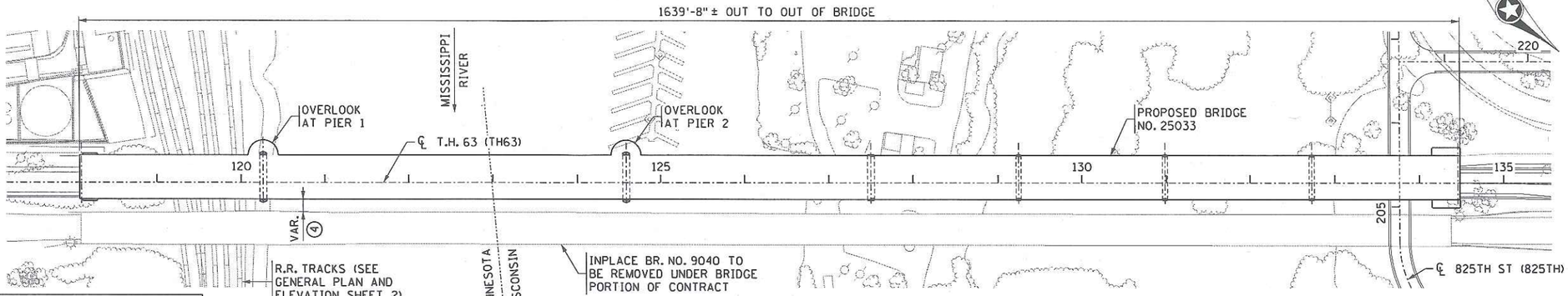

ROAD DESIGN UNIT:
CHAD HANSON 507-286-7637

BRIDGE DESIGN UNIT:
BEN JILK 651-366-4585

GENERAL PLAN

0 100'

DEPTH OF STRUCTURE:

GUTTER TO LOW BRIDGE
-SPANS 1 TO 3 = 9'-7" MIN TO 14'-7" MAX. (PARABOLIC HAUNCH)
-SPANS 4 TO 7 = 7'-10" (CONSTANT)

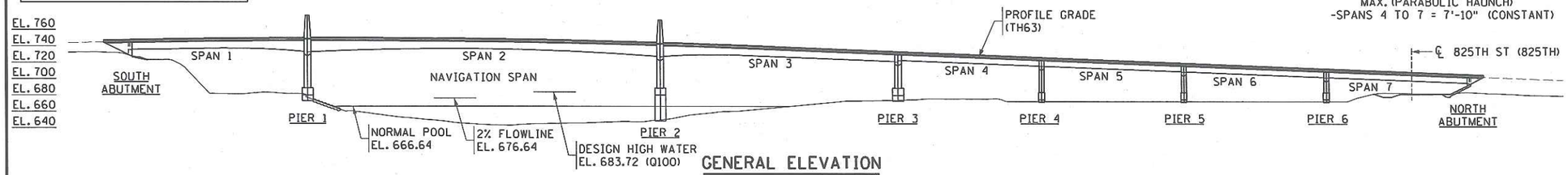

GENERAL ELEVATION

0 100'

NOTES:

RETAINING WALL AND WINGWALL CONNECTION DETAILS TO BE COORDINATED BETWEEN FINAL BRIDGE DESIGN AND ROAD DESIGN UNITS.

SEE PLAN AND PROFILE SHEETS FOR INPLACE UTILITIES.

SUBSTRUCTURES SET PARALLEL AT AZ. 229°33'40.4"

BRIDGE APPROACH PANEL LAYOUT STANDARDS 5-297.222 AND 5-297.223 SHALL APPLY.

BRIDGE APPROACH TREATMENT STANDARD 5-297.233 APPLIES.

BOX GIRDER ACCESS TO BE ADDRESSED DURING FINAL DESIGN.

TRAFFIC TO BE MAINTAINED ON INPLACE BR. 9040 DURING CONSTRUCTION.

VISUAL QUALITY MANUAL DEVELOPED FOR PROJECT.

METAL RAILING IN SPAN 1 TO MEET REQUIREMENTS FOR PROTECTIVE SCREENING PER LRFD BRIDGE DESIGN MANUAL 13.2.5.

PIER 1 FOUNDATION NOT TO PRECLUDE FUTURE PILE SUPPORTED TRAIL ADJACENT TO RIVER BY CITY OF RED WING.

DECK DRAINAGE SYSTEM ON BRIDGE IS ANTICIPATED. VERIFY AND DEVELOP IN FINAL DESIGN

PIERS 1 AND 2 LOCATED UPSTREAM OF EXISTING PIERS AND IN A SIMILAR LOCATION TO ACCOMMODATE NAVIGATION CHANNEL AND RAILROAD REQUIREMENTS, RESULTING IN SPAN 2 DIMENSION AS SHOWN. SOUTH ABUTMENT LOCATION SET TO MATCH EXISTING. SPAN 3 SET TO MINIMIZE UPLIFT AT SOUTH ABUTMENT AND PIER 3. SPANS 4-7 SET TO MAXIMIZE SPAN LENGTH, REDUCE THE NUMBER OF SUBSTRUCTURES, AND REDUCE SOIL STABILIZATION COSTS AT NORTH ABUTMENT.

A SETTLEMENT PERIOD IS REQUIRED AT THE NORTH ABUTMENT. SEE FINAL GEOTECHNICAL REPORT FOR WAITING PERIOD.

SEE SHEET 10 FOR NAVIGATIONAL AND RAILROAD CLEARANCES.

1. STRUCTURAL TUBE RAILING (DESIGN T-1) AND CONCRETE PARAPET (TYPE P-2, TL-4) MOD. 3'-0" MIN. HEIGHT ABOVE SLAB. SEE AESTHETICS.
2. ORNAMENTAL METAL RAILING TYPE SPECIAL (CURB MOUNT)
3. 9" MIN. SLAB
4. 14'± MIN. 18'± MAX. BASED ON DTM, VERIFY IN FINAL DESIGN.
5. NUMBER AND SPACING OF BEAMS AND BOX GIRDERS IS APPROXIMATE AND WILL BE SET DURING FINAL DESIGN
6. TYPICAL EXCEPT OVER R.R. TRACKS IN SPAN 1, WHICH REQUIRES 6'-0" TOTAL HEIGHT RAILING AND CURB.

LIST OF SHEETS

NO.	TITLE
1	COVER SHEET
2-4	GENERAL PLAN AND ELEVATION
5	BRIDGE SURVEY
6	TYPICAL SECTIONS AND PROFILES
7	ALIGNMENT TABULATIONS
8	STAGING AREA CONCEPT FOR CONSTRUCTION
9	EXISTING TO PROP. RIVER PIER CLEARANCES
10	NAVIGATIONAL AND RAILROAD CLEARANCES
11	WATER ELEVATION CHART
12-14	PLAN AND PROFILE
15-17	BORINGS
18-24	AESTHETIC DETAILS

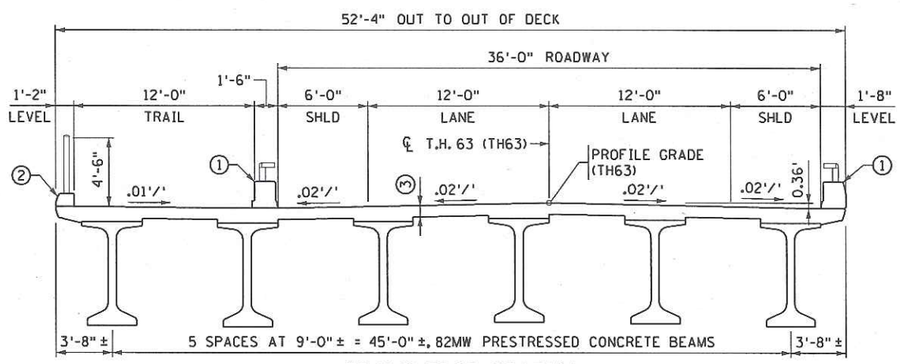

TRANSVERSE SECTION

SPANS 4 THRU 7 (5)
0 5'

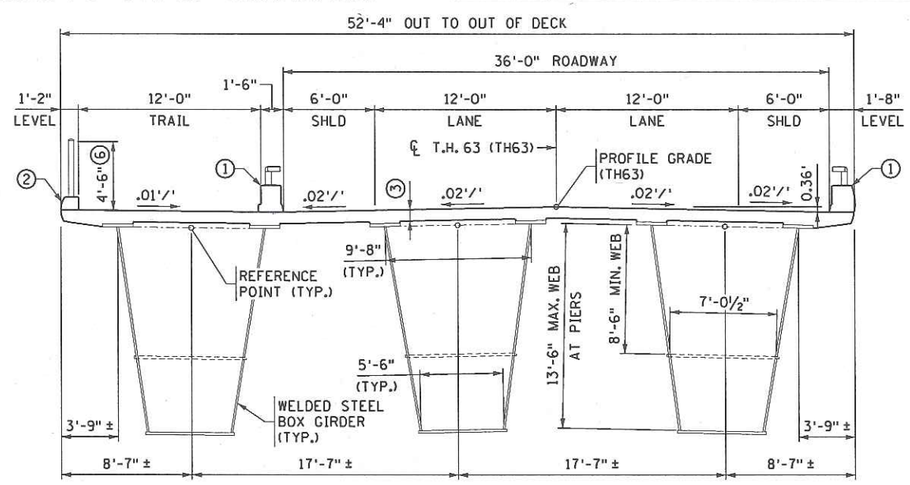

TRANSVERSE SECTION

SPANS 1 THRU 3 (5)
0 5'

DESIGN DATA

2014 AND CURRENT INTERIM AASHTO LRFD BRIDGE DESIGN SPECIFICATIONS

LOAD AND RESISTANCE FACTOR DESIGN METHOD
DESIGN LOADING HL-93 LIVE LOAD

η = 1.05 IMPORTANCE FACTOR

DEAD LOAD INCLUDES 20 psf ALLOWANCE FOR FUTURE WEARING COURSE MODIFICATIONS.

MATERIAL DESIGN PROPERTIES:
REINFORCED CONCRETE:
f'c = 4 ksi n = 8
fy = 60 ksi REINFORCEMENT
fy = 75 ksi REINFORCEMENT (STAINLESS)

STRUCTURAL STEEL:
fy = 50 ksi STRUCTURAL STEEL SPEC. 3309
fy = 70 ksi STRUCTURAL STEEL SPEC. 3317

PRESTRESSED CONCRETE:
f'c = 9 ksi n = 1
fpu = 270 ksi LOW RELAXATION STRANDS
0.75 fpu FOR INITIAL PRESTRESS

2042 PROJECTED TRAFFIC VOLUMES:

ROAD OVER		ROAD UNDER
15,600	A.A.D.T.	810
1,400	H.C.A.D.T.	N/A

DESIGN SPEED: 35 MPH (OVER), 30 MPH (UNDER)
APPROXIMATE DECK AREA 85810 SF

PROPOSED TYPE OF STRUCTURE

DECK:
8'-6" TO 13'-6" PARABOLICALLY HAUNCHED
STEEL BOX GIRDERS SPANS 1 - 3
TYPE 82MW PRESTRESSED CONC. BMS. SPANS 4 - 7
ALL BARS STAINLESS STEEL
FULL DEPTH HIGH PERFORMANCE CONCRETE

SUBSTRUCTURE:
S. ABUT : PARAPET TYPE ON SPREAD FOOTING
N. ABUT : PARAPET TYPE ON HP14 x 117 PILES
PIER 1 SUPPORTED ON 10'-0"Ø DRILLED SHAFTS
PIER 2 SUPPORTED ON 9'-0"Ø DRILLED SHAFTS
PIERS 3-6 SUPPORTED ON HP14 x 117 PILES

AESTHETICS:
LEVEL A

HDR

MINNESOTA DEPARTMENT OF TRANSPORTATION

PRELIMINARY BRIDGE PLANS
BRIDGE NO. 25033

T.H. 63 OVER CP RAIL, MISSISSIPPI RIVER, AND 825TH STREET
0.2 MILES NORTH OF JCT T.H. 63 AND T.H. 61

SPAN IDENTIFICATION NO. 407 SPANS 1 THRU 3
SPAN IDENTIFICATION NO. 501 SPANS 4 THRU 7

SEC. 30 TWP. 113 N. R. 14 W.

CITY OF RED WING GOODHUE COUNTY, MN
TOWN OF TRENTON PIERCE COUNTY, WI

APPROVED: Beverly A. B. Sandner 11/23/15
STATE BRIDGE ENGINEER DATE

WISCONSIN DEPARTMENT OF TRANSPORTATION
ACCEPTED: W. Dreher 11/25/15
CHIEF STRUCTURES DEVELOPMENT ENGINEER DATE

STRUCTURE B-47-0224

DES: DJR	DR: DJR	25033
CHK: JZB	CHK: JZB	

drachal 11:41:48 PM 11/4/2015
c:\pwworking\oma\d1023587\00000000017092\13.00.CAD\Bridge\Plan Shts\Br25033 Over River\1000
pw:\\PWAPPOMA001:NorthCentral.Omaha\Documents\007569\00000000017092.tbl

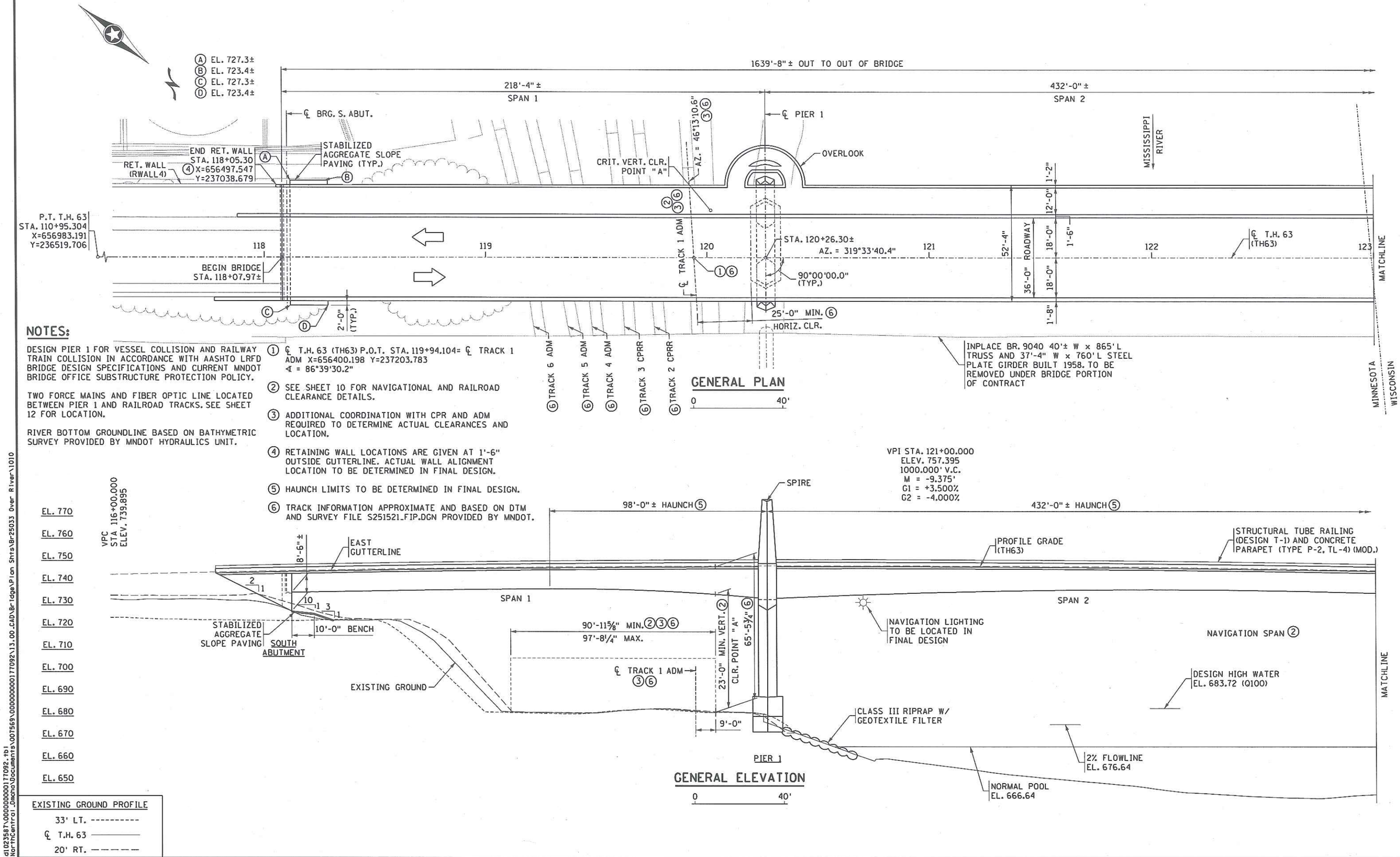

NOTES:

DESIGN PIER 1 FOR VESSEL COLLISION AND RAILWAY TRAIN COLLISION IN ACCORDANCE WITH AASHTO LRFD BRIDGE DESIGN SPECIFICATIONS AND CURRENT MNDOT BRIDGE OFFICE SUBSTRUCTURE PROTECTION POLICY.

TWO FORCE MAINS AND FIBER OPTIC LINE LOCATED BETWEEN PIER 1 AND RAILROAD TRACKS. SEE SHEET 12 FOR LOCATION.

RIVER BOTTOM GROUNDLINE BASED ON BATHYMETRIC SURVEY PROVIDED BY MNDOT HYDRAULICS UNIT.

① ℄ T.H. 63 (TH63) P.O.T. STA. 119+94.104= ℄ TRACK 1 ADM X=656400.198 Y=237203.783
∡ = 86°39'30.2"

② SEE SHEET 10 FOR NAVIGATIONAL AND RAILROAD CLEARANCE DETAILS.

③ ADDITIONAL COORDINATION WITH CPR AND ADM REQUIRED TO DETERMINE ACTUAL CLEARANCES AND LOCATION.

④ RETAINING WALL LOCATIONS ARE GIVEN AT 1'-6" OUTSIDE GUTTERLINE. ACTUAL WALL ALIGNMENT LOCATION TO BE DETERMINED IN FINAL DESIGN.

⑤ HAUNCH LIMITS TO BE DETERMINED IN FINAL DESIGN.

⑥ TRACK INFORMATION APPROXIMATE AND BASED ON DTM AND SURVEY FILE S251521_FIP.DGN PROVIDED BY MNDOT.

EXISTING GROUND PROFILE
33' LT. ----------
℄ T.H. 63 ————
20' RT. — — — — —

REVISION					
NO.	DATE	DESCRIPTION	DR.	CHK.	APP'D.

HDR

TITLE:
GENERAL PLAN AND ELEVATION
SHEET 1 OF 3

DES: DJR | DR: DJR | APPROVED:
CHK: JZB | CHK: JZB

MINNESOTA PROJECT NO. 2516-25033
WISCONSIN PROJECT NO. 7210-00-06

SHEET NO. 2 OF 24 SHEETS

BRIDGE NO.
25033

drachel
11/4/2015 1:11:55 PM
c:\pwworking\omo\d1023587\00000000017092.rb1
pw:\\PWAPPOMA001:Northcentral.Documents\007569\00000000017092\13.00.CAD\Bridge\Plan Shts\Br25033 Over River\1010

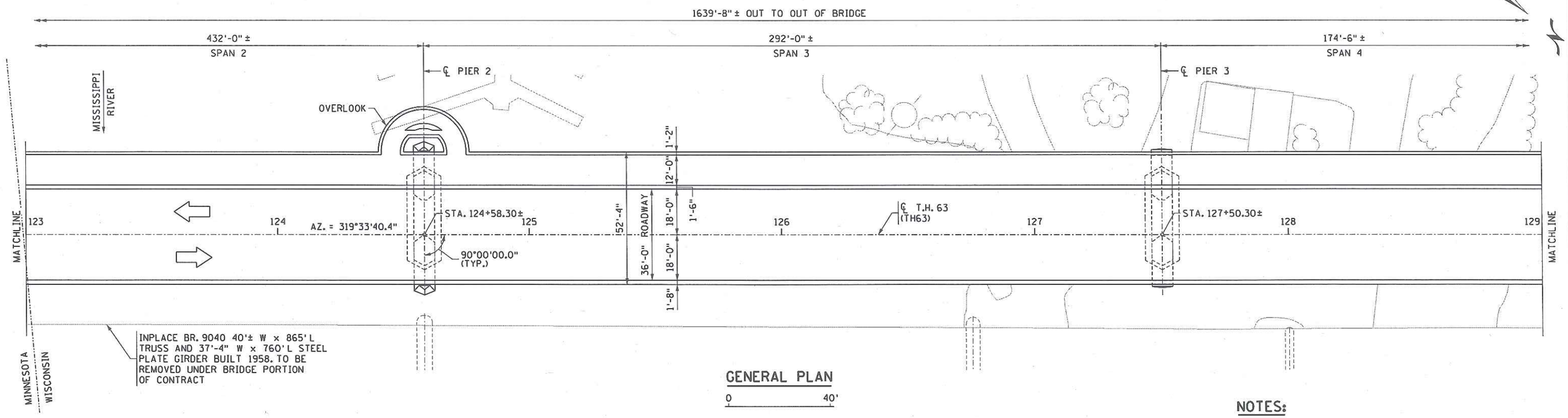

GENERAL PLAN

0 40'

NOTES:

DESIGN PIER 2 FOR VESSEL COLLISION IN ACCORDANCE WITH AASHTO LRFD BRIDGE DESIGN SPECIFICATIONS. INVESTIGATE THE VESSEL COLLISION REQUIREMENT AT PIER 3.

RIVER BOTTOM GROUNDLINE BASED ON BATHYMETRIC SURVEY PROVIDED BY MNDOT HYDRAULICS UNIT.

(1) SEE SHEET 10 FOR NAVIGATIONAL CLEARANCE DETAILS.

(2) HAUNCH LIMITS TO BE DETERMINED IN FINAL DESIGN.

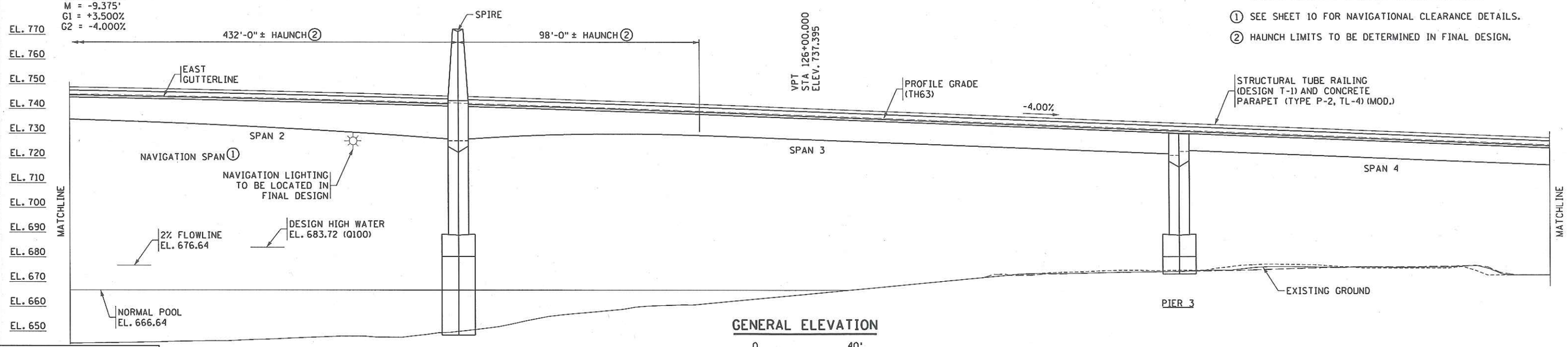

GENERAL ELEVATION

0 40'

EXISTING GROUND PROFILE
33' LT. ----------
℄ T.H. 63 ————
20' RT. — — — — —

REVISION					
NO.	DATE	DESCRIPTION	DR.	CHK.	APP'D.

HDR

TITLE:
GENERAL PLAN AND ELEVATION
SHEET 2 OF 3

DES: DJR	DR: DJR	APPROVED:
CHK: JZB	CHK: JZB	

MINNESOTA PROJECT NO. 2516-25033
WISCONSIN PROJECT NO. 7210-00-06

SHEET NO. 3 OF 24 SHEETS

BRIDGE NO. 25033

drachel
11/20/2015 1:29 PM
c:\bwworking\ama\d1023587\00000000017092.tb1
pw:\\PWAPPDMA001.NorthBnfrd.Omaha\Documents\007569\00000000017092\13.00.CAD\Bridge\Plan Shts\Br25033 Over River\1020

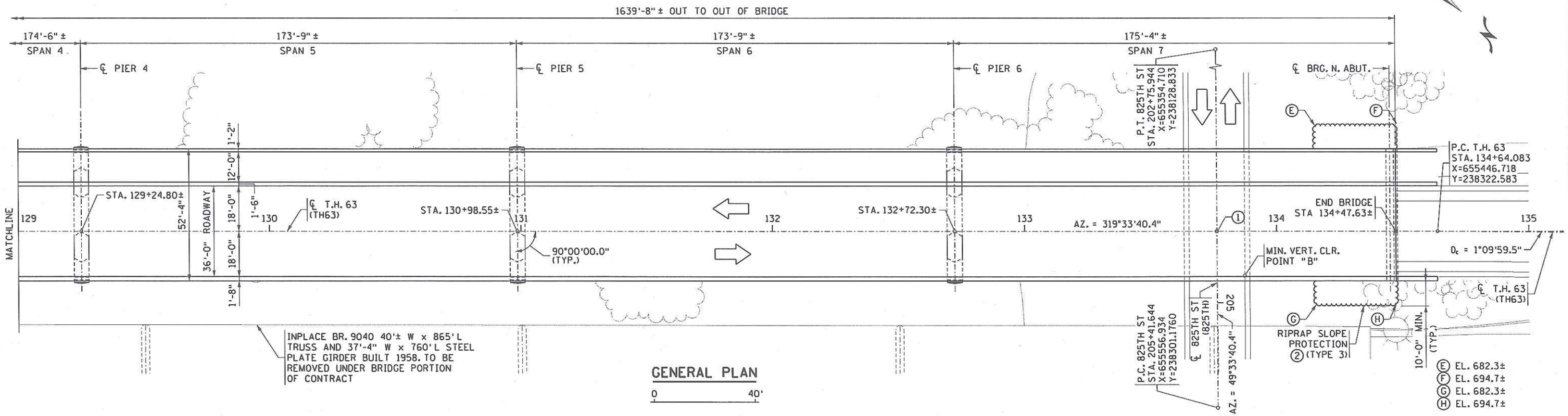

GENERAL PLAN

0 40'

NOTES:

(1) ℄ T.H. 63 (TH63)
P.O.T. STA. 133+76.300=
℄ 825TH ST. (825TH)
P.O.T. STA 204+71.644
X=655503.657 Y=238255.772
∢ = 90°00'00.0"

(2) SEE WISDOT BRIDGE MANUAL STANDARD DRAWINGS DETAIL 15.01

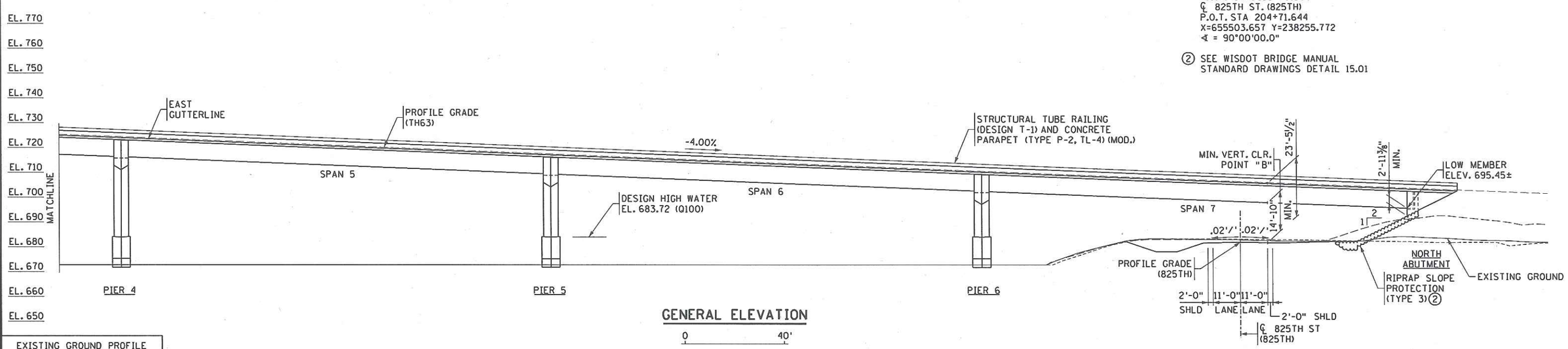

GENERAL ELEVATION

0 40'

EXISTING GROUND PROFILE
33' LT. ----------
℄ T.H. 63 ————
20' RT. — — — — —

REVISION					
NO.	DATE	DESCRIPTION	DR.	CHK.	APP'D.

HDR

TITLE:
GENERAL PLAN AND ELEVATION
SHEET 3 OF 3

DES: DJR	DR: DJR	APPROVED:
CHK: JZB	CHK: JZB	

MINNESOTA PROJECT NO. 2516-25033
WISCONSIN PROJECT NO. 7210-00-06

SHEET NO. 4 OF 24 SHEETS

BRIDGE NO. 25033

dracha1
11/4/2015 8:18 PM
c:\pwworking\oma\d102587\00000000\177092.tb1
pw:\\PWAPPDMA001:NORTHCENTRAL.OMAHA\Documents\007569\00000000\177092\13.00.CAD\Bridge\Plan Shts\Br25033 Over River\1030

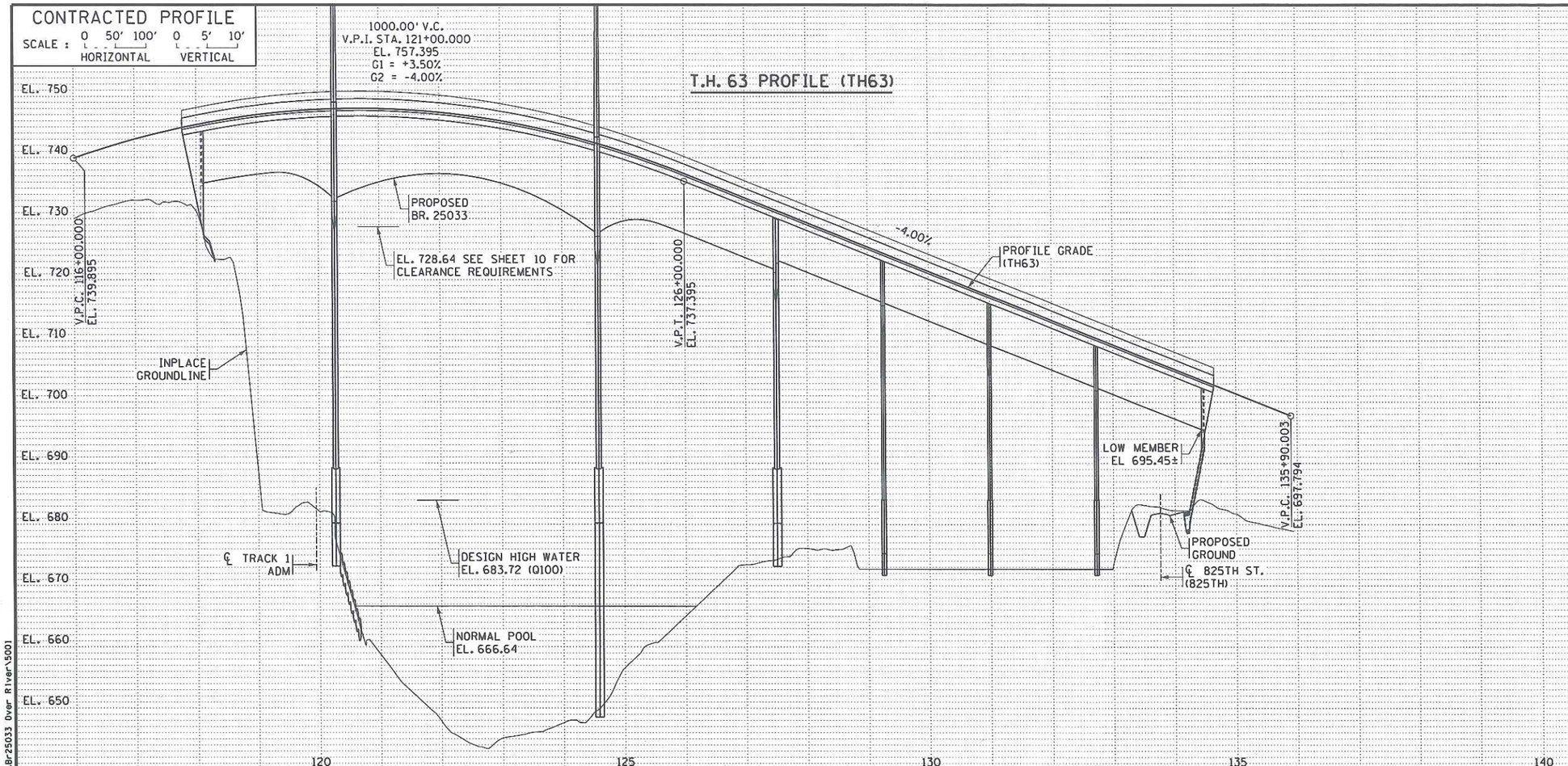

LOCATION ENGINEER'S OBSERVATIONS AT BRIDGE SITE

1. SPECIAL FEATURES: FLOODS, ICE, DEBRIS, RECREATIONAL BOATING.
2. OTHER BRIDGES OR CULVERTS OVER THE SAME STREAM (PARTICULARLY STRUCTURES WHICH CARRY HIGH WATER WITHOUT OVERFLOW OF ROADWAY): NONE
3. APPARENT HIGHWATER ELEVATION 685.47 (NAVD 88) OBTAINED FROM: MNDOT HYDRAULIC REPORT APRIL 16, 2015
4. OTHER DATA: NONE

HYDRAULIC ENGINEERS RECOMMENDATION

DATE: 4-16-2015

STREAM OR DITCH DESIGNATION: MISSISSIPPI RIVER
DRAINAGE AREA: 46,300 SQ. MI.
MAX. FLOOD ON RECORD: 228,000 C.F.S. (04-18-1965)
MAXIMUM OBSERVED HIGHWATER ELEVATION: 685.47 FT.
DESIGN FLOOD (100 YR. FREQ.): 197,000 C.F.S.
HEADWATER ELEVATION: 683.72 FT.
DESIGN MEAN VELOCITY THROUGH STRUCTURE: 5.0 F.P.S.
TOTAL STAGE INCREASE: 0.00 FT.
MIN. ELEVATION OVER NAVIGATION CHANNEL AS PRESCRIBED BY U.S. COAST GUARD, SEE SHEET 10
WATERWAY AREA REQ'D BELOW ELEV. 683.61 = 25,020 SQ. FT. AT RIGHT ANGLES TO CHANNEL
BASIC FLOOD (100 YR. FREQ.): 197,000 C.F.S.
HEADWATER ELEVATION: 683.72 FT.
TOTAL STAGE INCREASE: 0.0 FT.
MEAN VELOCITY THROUGH STRUCTURE: 5.0 F.P.S.
FLOWLINE ELEVATION: 642.2 FT. SKEW ANGLE: 0°
ESTIMATED PRELIMINARY TOTAL SCOUR AT PIER EL. 605.4 (500 OR OT YR. FREQ.)

SCOUR CONFIRMATION RECOMMENDATION

DATE: 09-03-15

TOTAL SCOUR AT PIER 1 EL. 632.0, PIER 2 EL. 605.4, PIER 3 EL. 659.9, PIERS 4-6 665.7 (500 OR OT YR. FREQ.)
SCOUR CODE: N - STABLE

BRIDGE SURVEY SHEETS MADE FROM :

FILES:
JOB112.GPK, 119112_TP1.DGN, 119112_RW1.DGN, 119112_PR1.DGN, 119112_GM1.DGN, 119112_AL1.DGN, 119112.TIN, S251521_AL.DGN, S251521_FIP.DGN

BENCH MARK ELEVATION 678.588 (N.A.V.D 88 ADJ.) GSID STATION #93692, MNDOT NAME: "RW 4 2010", IN RED WING. X = 653,443.923, Y = 235,968.901

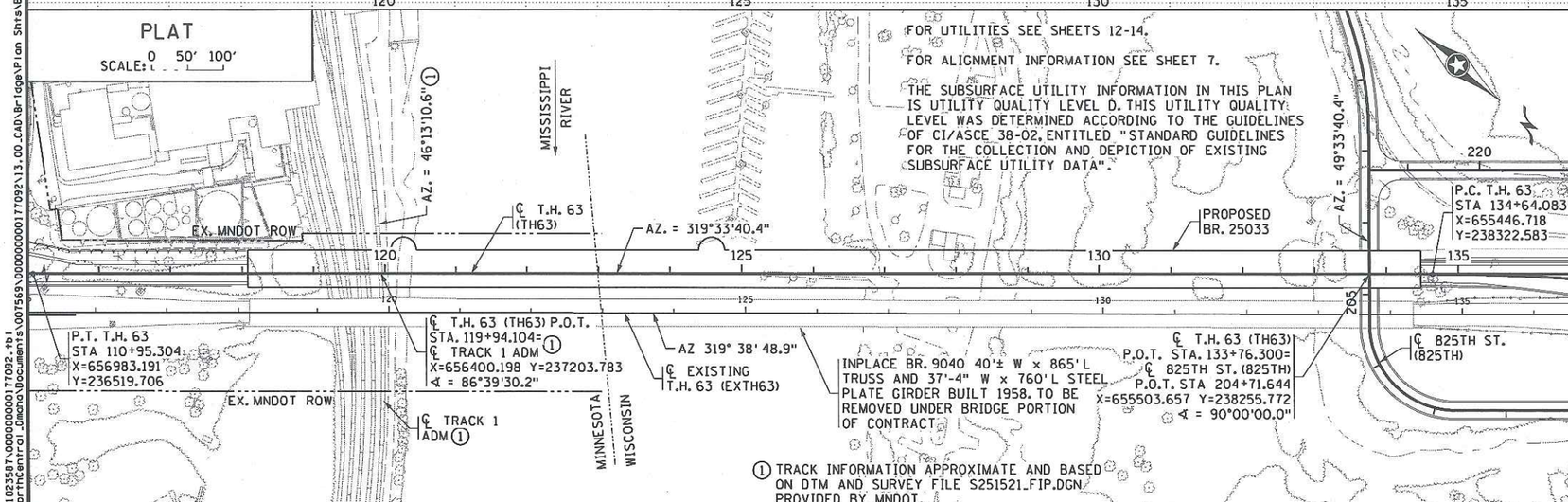

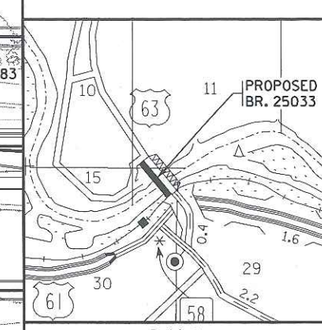

INDEX MAP
(FOUR SECTIONS)

MINNESOTA
DEPARTMENT OF TRANSPORTATION

BRIDGE SURVEY

T.H. 63 OVER CP RAIL, MISSISSIPPI RIVER, AND 825TH STREET
0.2 MILES N. OF JCT T.H. 63 AND T.H. 61

SEC. 30 TWP. 113 N. R. 14 W.

CITY OF RED WING GOODHUE COUNTY, MN
TOWN OF TRENTON PIERCE COUNTY, WI

REVISION					
NO.	DATE	DESCRIPTION	DR.	CHK.	APP'D.

HDR

TITLE: BRIDGE SURVEY

DES: DJR DR: DJR APPROVED:
CHK: JZB CHK: JZB

MINNESOTA PROJECT NO. 2515-21
WISCONSIN PROJECT NO. 7210-00-06

SHEET NO. 5 OF 24 SHEETS

BRIDGE NO. 25033

drachel
11/27/ PM
11/4/2015
c:\pwworking\oma\d1023587\00000000017092.rb1
pw:\\PWAPPOMA001.HorthCentral.Omaha\Documents\007569\00000000017092\13.00_CAD\Bridge\Plan Shts\Br25033 Over River\5001

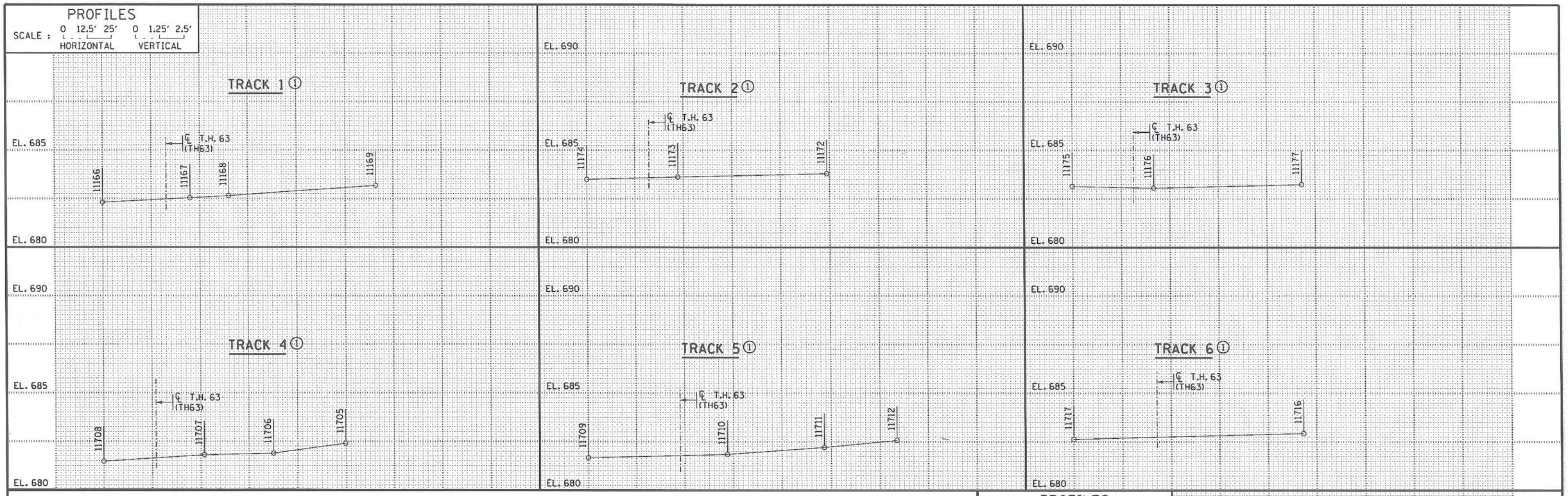

NOTES:

ADDITIONAL COORDINATION WITH CPR AND ADM REQUIRED TO DETERMINE ACTUAL CLEARANCES AND LOCATION.

① SEE SHEET 10 FOR RAILROAD SURVEY POINT DATA.

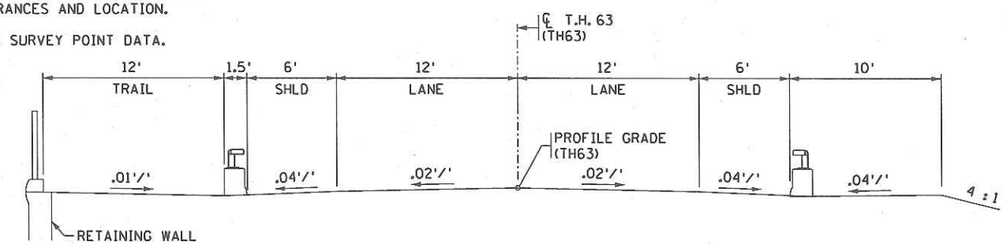

PROPOSED TYPICAL SECTION T.H. 63

STA. 115+70.1 TO STA. 117+77.3

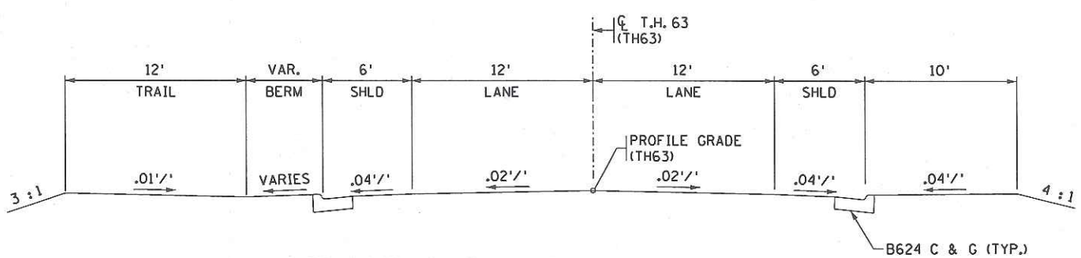

PROPOSED TYPICAL SECTION T.H. 63

STA. 134+64.7 TO STA. 135+20.0

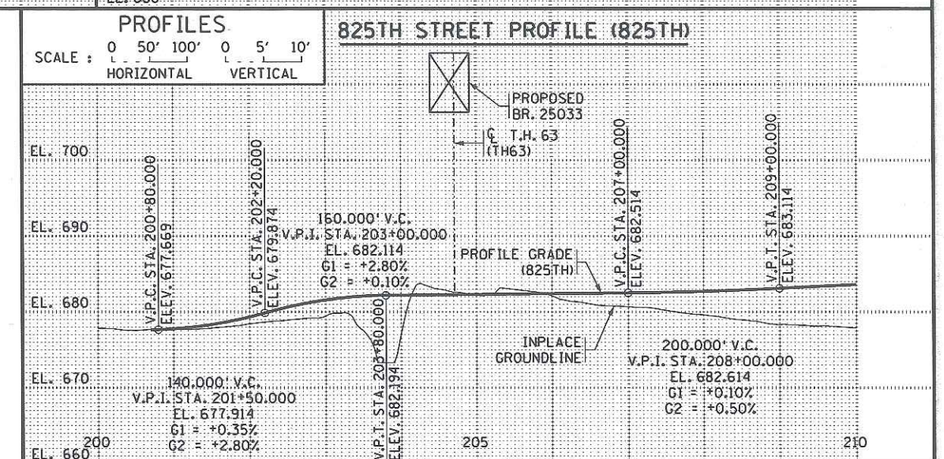

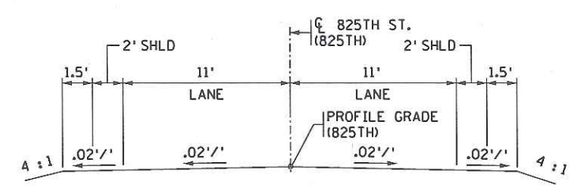

PROPOSED TYPICAL SECTION 825TH STREET

REVISION					
NO.	DATE	DESCRIPTION	DR.	CHK.	APP'D.

HDR

TITLE: TYPICAL SECTIONS AND PROFILES

DES: DJR	DR: DJR	APPROVED:
CHK: JZB	CHK: JZB	

MINNESOTA PROJECT NO. 2515-21
WISCONSIN PROJECT NO. 7210-00-06

SHEET NO. 6 OF 24 SHEETS

BRIDGE NO. 25033

c:\pwworking\omo\d1023587\00000000177092\13.00.CAD\Bridge\Plan Shts\Br25033 Over River\5002
dregnal PM
11/24/2015
pw:\\PWAPPOWA001:Horizon\Documents\007569\00000000177092.tbl

DENOTES ALIGNMENT USED IN PLAN

DENOTES ALIGNMENT GEOPAK NAME

ALIGNMENT TABULATION - (TH63) T.H. 63

POINT NUMBER	POINT	STATION	CURVE DATA					COORDINATES		AZIMUTH
			DELTA	DEGREE	RADIUS	TANGENT	LENGTH			
			SPIRAL CURVE DATA							
			ANGLE (Os)	DEGREE	ST	LT	LS	X	Y	
1010	PI	109+64.185	87° 48' 24.1" RT	24° 54' 40.4"	230.000'	221.360'	352.479'	657,126.773	236,351.229	PI
	CC							657,158.244	236,668.892	
	PT	110+95.304						656,983.191	236,519.706	319° 33' 40.4"
	PC	134+64.083						655,446.718	238,322.583	319° 33' 40.4"
1015	PI	135+71.993	4° 18' 50.5" RT	1° 59' 59.5"	2,865.000'	107.910'	215.717'	655,376.724	238,404.713	PI

ALIGNMENT TABULATION - (825TH) 825TH STREET

POINT NUMBER	POINT	STATION	CURVE DATA					COORDINATES		AZIMUTH
			DELTA	DEGREE	RADIUS	TANGENT	LENGTH			
			SPIRAL CURVE DATA							
			ANGLE (Os)	DEGREE	ST	LT	LS	X	Y	
1930	PI	202+02.669	16° 55' 01.9" RT	11° 27' 33.0"	500.000'	74.356'	147.630'	655,298.117	238,080.603	PI
	CC							655,679.027	237,748.283	
	PT	202+75.943						655,354.710	238,128.833	49° 33' 40.5"
	PC	205+41.644						655,556.934	238,301.176	49° 33' 40.5"
1935	PI	206+61.644	90° 00' 00.0" LT	47° 44' 47.3"	120.000'	120.000'	188.496'	655,648.266	238,379.012	PI

ALIGNMENT TABULATION - (TH61NB) T.H. 61 N.B.

POINT NUMBER	POINT	STATION	CURVE DATA					COORDINATES		AZIMUTH
			DELTA	DEGREE	RADIUS	TANGENT	LENGTH			
			SPIRAL CURVE DATA							
			ANGLE (Os)	DEGREE	ST	LT	LS	X	Y	
1100	POT	42+00.000						658,683.434	236,686.257	
	PC	60+30.101						656,855.281	236,770.676	272° 38' 37.9"
1105	PI	62+33.571	51° 16' 15.8" LT	13° 30' 47.4"	424.000'	203.470'	379.416'	656,652.028	236,780.061	PI

ALIGNMENT TABULATION - (TH63-SLIP) T.H. 63 SLIP

POINT NUMBER	POINT	STATION	CURVE DATA					COORDINATES		AZIMUTH
			DELTA	DEGREE	RADIUS	TANGENT	LENGTH			
			SPIRAL CURVE DATA							
			ANGLE (Os)	DEGREE	ST	LT	LS	X	Y	
	PC	113+00.000						656,836.917	236,663.592	139° 33' 40.4"
1075	PI	113+60.936	24° 33' 19.2" RT	20° 27' 46.0"	280.000'	60.936'	120.000'	656,876.442	236,617.214	PI
	CC							656,623.809	236,481.974	
	PCC	114+20.000						656,893.119	236,558.605	164° 06' 59.7"
	PCC	114+20.000						656,893.119	236,558.605	164° 06' 59.7"
1080	PI	115+17.902	57° 05' 01.0" RT	31° 49' 51.6"	180.000'	97.902'	179.333'	656,919.913	236,464.441	PI
	PT	115+99.333						656,855.425	236,390.778	221° 12' 00.6"

ALIGNMENT TABULATION - (TH61SB) T.H. 61 S.B.

POINT NUMBER	POINT	STATION	CURVE DATA					COORDINATES		AZIMUTH
			DELTA	DEGREE	RADIUS	TANGENT	LENGTH			
			SPIRAL CURVE DATA							
			ANGLE (Os)	DEGREE	ST	LT	LS	X	Y	
1165	PI	57+19.841	2° 16' 08.3" RT	0° 45' 00.2"	7,639.000'	151.276'	302.512'	657,163.416	236,710.398	PI
	CC							657,666.901	244,334.288	
	PT	58+71.077						657,012.695	236,723.353	274° 54' 46.2"
	PC	60+15.179						656,869.123	236,735.694	274° 54' 46.2"
1170	PI	62+11.926	53° 32' 24.1" LT	14° 41' 28.4"	390.000'	196.747'	364.435'	656,673.098	236,752.544	PI

ALIGNMENT TABULATION - (BLUFF) BLUFF ST.

POINT NUMBER	POINT	STATION	CURVE DATA					COORDINATES		AZIMUTH
			DELTA	DEGREE	RADIUS	TANGENT	LENGTH			
			SPIRAL CURVE DATA							
			ANGLE (Os)	DEGREE	ST	LT	LS	X	Y	
1255	PI	54+00.605	23° 38' 22.1" LT	114° 35' 29.6"	50.000'	10.464'	20.629'	656,926.355	236,497.852	PI
	CC							656,901.679	236,453.124	
	PT	54+10.771						656,916.352	236,500.923	287° 03' 56.0"
1260	POT	56+11.947						656,724.034	236,559.961	

ALIGNMENT TABULATION - (BYPASS) BYPASS

POINT NUMBER	POINT	STATION	CURVE DATA					COORDINATES		AZIMUTH
			DELTA	DEGREE	RADIUS	TANGENT	LENGTH			
			SPIRAL CURVE DATA							
			ANGLE (Os)	DEGREE	ST	LT	LS	X	Y	
	PC	40+00.000						657,163.536	236,438.953	268° 40' 53.38"
BYPASS-1	PI	40+05.799	2° 53' 18.34" RT	24° 54' 40.35"	230.000'	5.799'	11.595'	657,157.739	236,438.820	PI
	CC							657,158.244	236,668.892	
	PCC	40+11.595						657,151.943	236,438.979	271° 34' 11.72"
	PCC	40+11.595						657,151.943	236,438.979	271° 34' 11.72"
BYPASS-2	PI	41+49.361	67° 48' 16.85" RT	27° 56' 56.98"	205.000'	137.766'	242.600'	657,014.228	236,442.753	PI
	CC							657,157.559	236,643.902	
	PT	42+54.195						656,965.699	236,571.689	339° 22' 28.57"
	PC	44+36.933						656,901.328	236,742.714	339° 22' 28.57"
BYPASS-3	PI	45+43.397	39° 04' 39.11" LT	19° 05' 54.94"	300.000'	106.464'	204.609'	656,863.826	236,842.354	PI

REVISION					
NO.	DATE	DESCRIPTION	DR.	CHK.	APP'D.

HDR

TITLE: ALIGNMENT TABULATIONS

DES: GB | DR: DJR | APPROVED:
CHK: JZB | CHK: JZB

MINNESOTA PROJECT NO. 2515-21
WISCONSIN PROJECT NO. 7210-00-06

SHEET NO. 7 OF 24 SHEETS

BRIDGE NO. 25033

drachaj
11/17/2015 1:15:55 PM
c:\pwworking\oma\d1023587\00000000177092.tb1
pw:\\PWPPOMA001.NorthCentral.Loma\Documents\007569\00000000177092\13.00_CAD\Bridge\Plan Shts\Br25033 Over River\5003

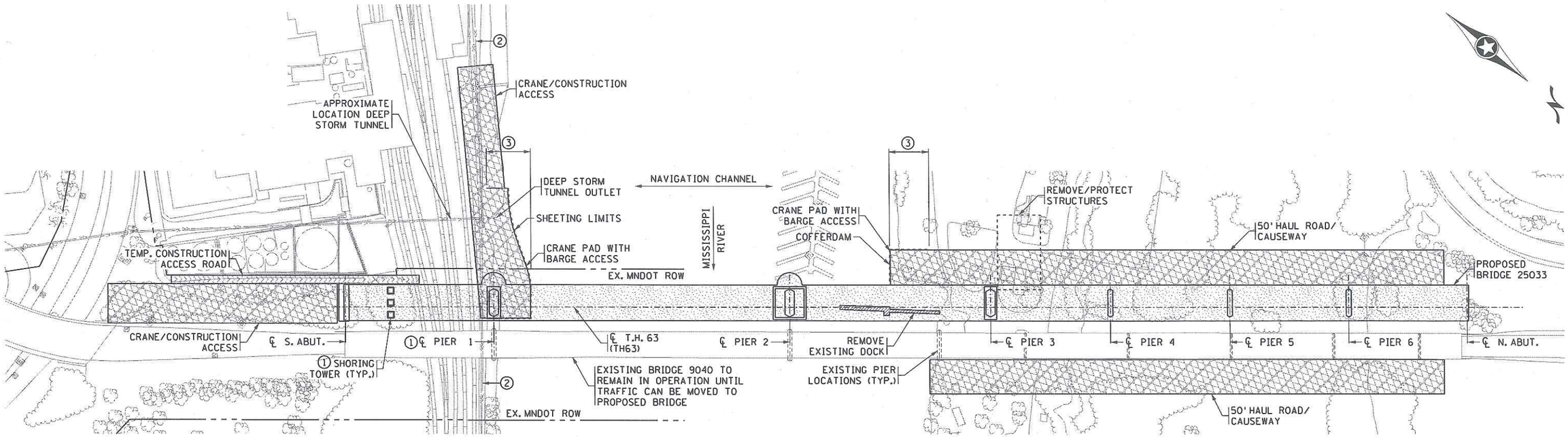

PLAN

NOTES:

POSSIBLE STAGING AREAS FOR CONSTRUCTION SHOWN, AREAS TO BE REFINED IN FINAL DESIGN.

CRANE PAD DIMENSION BASED ON PROPOSED ERECTION SEQUENCE. SEE MEMO DATED 6/3/2015 FOR MORE INFORMATION.

① SHORING TOWER AND TEMPORARY SHORING (AS NECESSARY) SHALL COMPLY TO A.A.S.H.T.O., A.R.E.M.A., C.P. RAILWAY, AND ADM REQUIREMENTS FOR DESIGN AND LOCATION. SEE BNSF/UP "GUIDELEINES FOR TEMPORARY SHORING" AS BASELINE REFERENCE.

② FOR ADDITIONAL FORCEMAIN INFORMATION AND LOCATION OF OTHER UTILITIES SEE SHEETS 12-14.

③ VARIES 30' TO 60' DEPENDENT ON CRANE DIMENSIONS AND COAST GUARD PERMIT.

REVISION					
NO.	DATE	DESCRIPTION	DR.	CHK.	APP'D.

HDR

TITLE: STAGING AREA CONCEPT FOR CONSTRUCTION

DES: DJR | DR: DJR | APPROVED:
CHK: JZB | CHK: JZB

MINNESOTA PROJECT NO. 2516-25033
WISCONSIN PROJECT NO. 7210-00-06

SHEET NO. 8 OF 24 SHEETS

BRIDGE NO. 25033

dgnsel
1:43:00 PM
11/4/2015
c:\pwwork\ngo\omaa\d1023587\00000000017092.tb1
pw:\\PWAPPOMAA001:NorthCentral.Omaha\Documents\007569\00000000017092\13.00.CAD\Bridge\Plan Shts\Br25033 Over River\5004

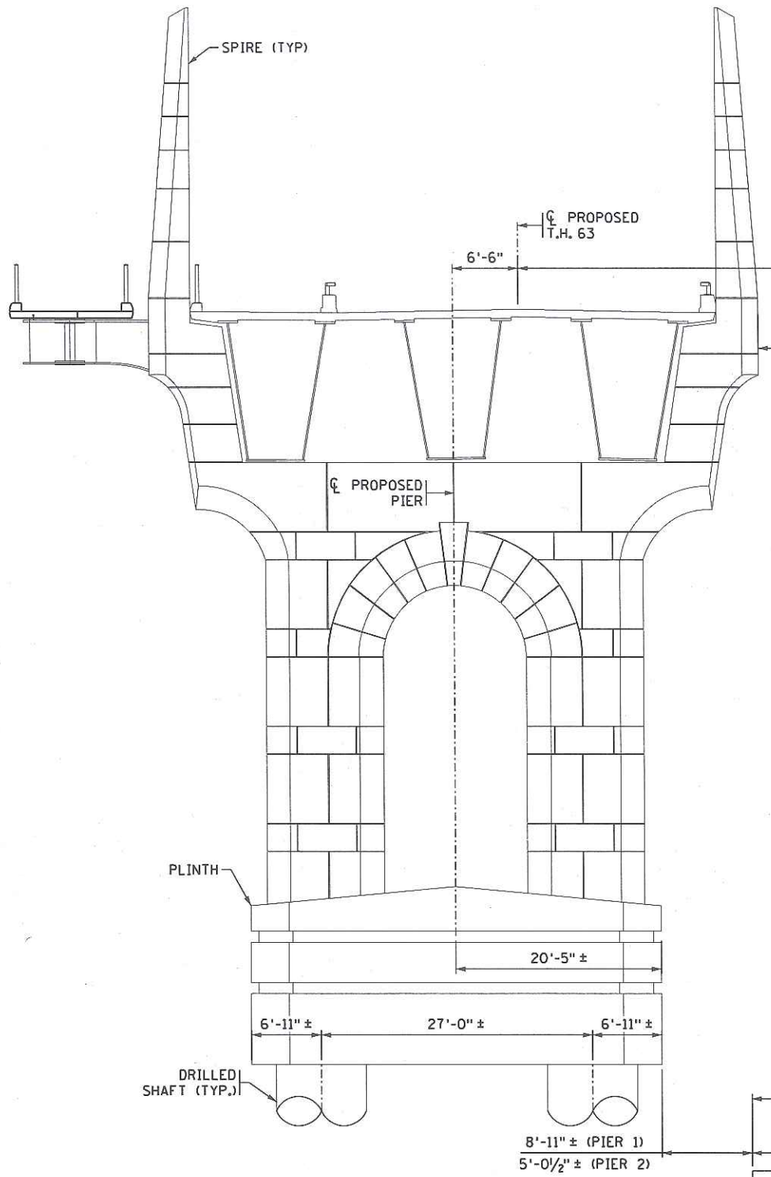

PROPOSED PIER ELEVATION①

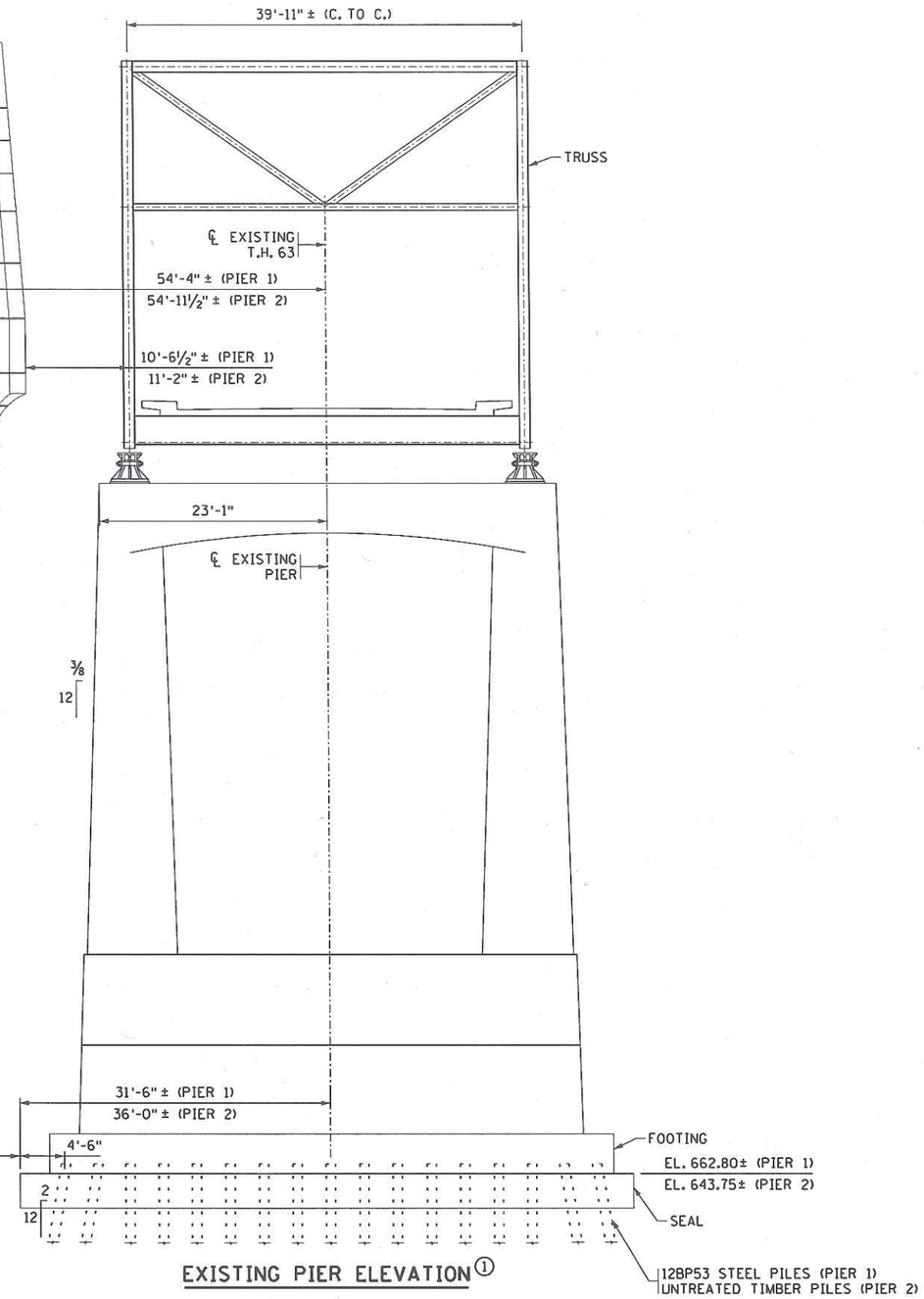

EXISTING PIER ELEVATION①

NOTES:

ALL DIMENSIONS APPROXIMATE ONLY. EXISTING GEOMETRY BASED ON BR. 9040 PLANS DATED 1958. ℄ EXISTING T.H. 63 OBTAINED FROM S25121_AL.DGN.

POTENTIAL PILE CONFLICTS TO BE EVALUATED IN FINAL DESIGN.

FOR ADDITIONAL PROPOSED PIER GEOMETRY SEE AESTHETIC DETAILS SHEET 5 OF 7.

① PIER 1 SHOWN, PIER 2 SIMILAR EXCEPT FOR ELEVATIONS INCLUDING THAT OF THE EXISTING FOOTING AND THE PROPOSED PLINTH.

REVISION					
NO.	DATE	DESCRIPTION	DR.	CHK.	APP'D.

HDR

TITLE: EXISTING TO PROPOSED RIVER PIER CLEARANCES

DES: DJR | DR: DJR | APPROVED:
CHK: JZB | CHK: JZB

MINNESOTA PROJECT NO. 2516-25033
WISCONSIN PROJECT NO. 7210-00-06

SHEET NO. 9 OF 24 SHEETS

BRIDGE NO. 25033

drachel
11/4/2015 1:19:09 PM
c:\pwworking\omaa\d1023587\00000000177092.tb1
pw:\\PWAPOMA001.Northcentral.Omaha\Documents\007569\00000000177092\13.00_CAD\Bridge\Plan Shts\Br25033 Over River\5005

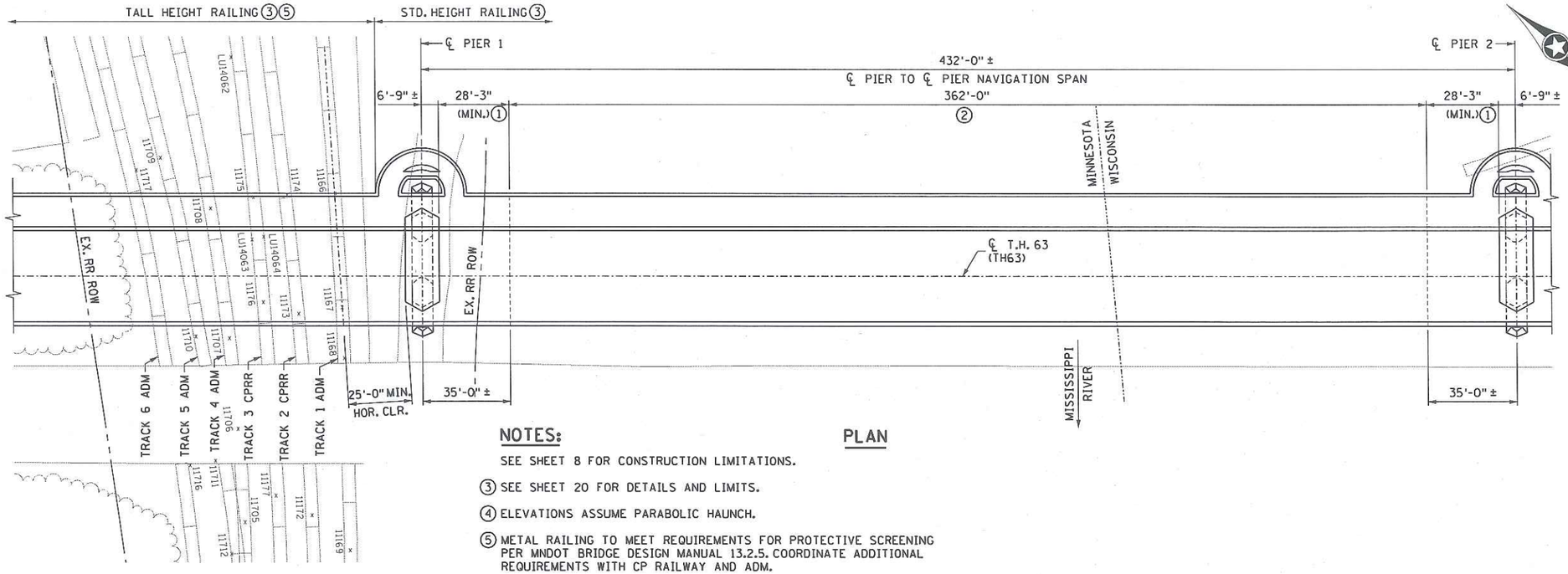

PLAN

NOTES:

SEE SHEET 8 FOR CONSTRUCTION LIMITATIONS.

③ SEE SHEET 20 FOR DETAILS AND LIMITS.

④ ELEVATIONS ASSUME PARABOLIC HAUNCH.

⑤ METAL RAILING TO MEET REQUIREMENTS FOR PROTECTIVE SCREENING PER MNDOT BRIDGE DESIGN MANUAL 13.2.5. COORDINATE ADDITIONAL REQUIREMENTS WITH CP RAILWAY AND ADM.

⑥ PER AASHTO, VESSEL COLLISION LOAD IS APPLIED 5' ABOVE DESIGN HIGH WATER. ONLY PIERS 1-3 REQUIRE VESSEL COLLISION PROTECTION (PLINTH)

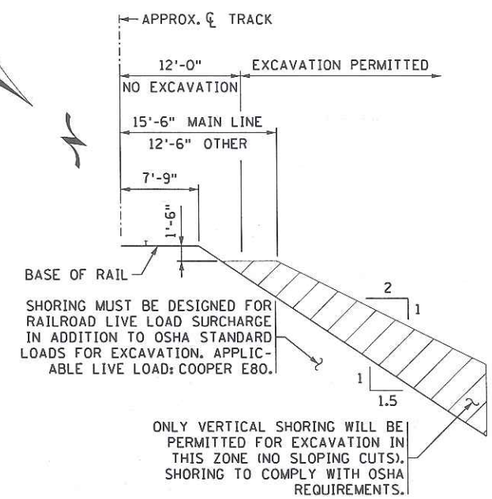

EXCAVATION ZONE

RAILROAD SURVEY POINTS *				
POINT	X	Y	ELEV.	DESCRIPTION
11166	656376.402	237181.269	682.31	TRACK 1 RR BED
11167	656409.044	237212.266	682.54	TRACK 1 RR BED
11168	656423.895	237225.878	682.65	TRACK 1 RR BED
11169	656480.432	237276.434	683.18	TRACK 1 RR BED
11172	656479.650	237256.068	684.03	TRACK 2 RR BED
11173	656422.205	237200.831	683.62	TRACK 2 RR BED
11174	656389.387	237166.974	683.50	TRACK 2 RR BED
11175	656398.695	237157.524	683.15	TRACK 3 RR BED
11176	656427.867	237187.275	683.06	TRACK 3 RR BED
11177	656483.008	237240.142	683.25	TRACK 3 RR BED
11705	656499.042	237237.503	682.41	TRACK 4 RR BED
11706	656472.676	237211.691	681.89	TRACK 4 RR BED
11707	656447.513	237186.070	681.81	TRACK 4 RR BED
11708	656413.032	237147.481	681.48	TRACK 4 RR BED
11709	656410.725	237119.311	681.67	TRACK 5 RR BED
11710	656455.545	237175.453	681.85	TRACK 5 RR BED
11711	656487.943	237213.102	682.21	TRACK 5 RR BED
11712	656512.077	237241.530	682.59	TRACK 5 RR BED
11716	656495.955	237206.490	682.93	TRACK 6 RR TOR
11717	656420.666	237115.284	682.63	TRACK 6 RR TOR
LU14062	656362.112	237115.077	683.49	TRACK 3 RR TOR
LU14063	656411.790	237167.845	683.68	TRACK 3 RR TOR
LU14064	656407.955	237170.675	683.84	TRACK 3 RR TOR

* DATA FROM FILE S251521_FIP.DGN PROVIDED BY MNDOT.

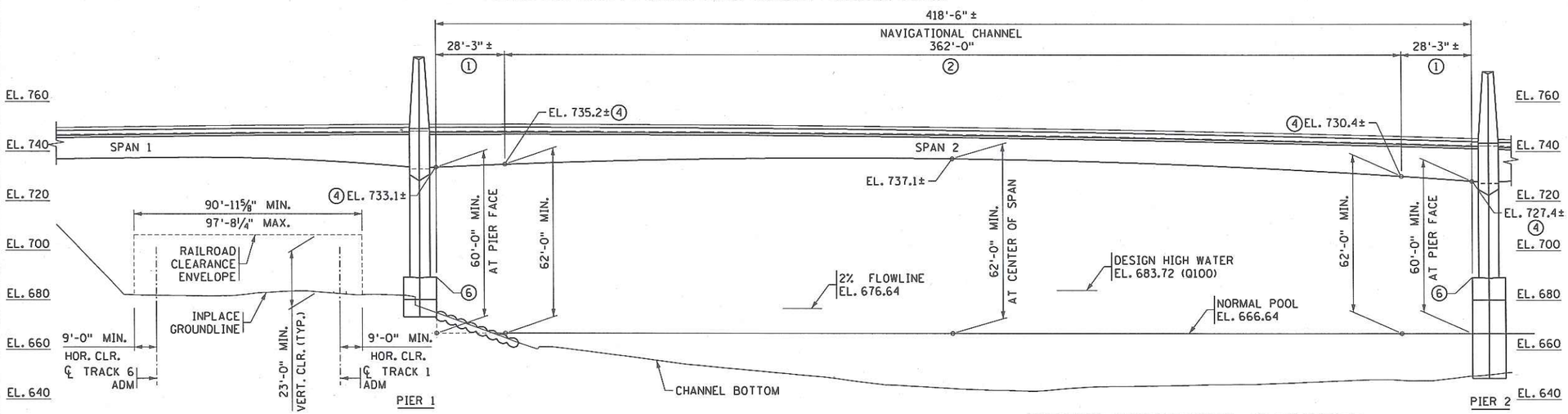

ELEVATION

MINIMUM NAVIGATIONAL CLEARANCES

ALL ELEVATIONS REFERENCE NAVD88 DATUM. NAVD88 = (DATUM 1912) - 0.357 FEET.

TEMPORARY MIN. CLEARANCES FOR CONSTRUCTION TO BE COORDINATED WITH USCG DURING CONSTRUCTION. SEE SHEET 8.

① 60.0' ABOVE NORMAL POOL AT CHANNEL PIERS

② 62.0' ABOVE NORMAL POOL WITHIN NAVIGATION CHANNEL

MINIMUM ELEVATION OVER NORMAL POOL WITHIN NAVIGATION CHANNEL:
666.64 + 60.00' = 726.64

REVISION					
NO.	DATE	DESCRIPTION	DR.	CHK.	APP'D.

HDR

TITLE: NAVIGATIONAL AND RAILROAD CLEARANCES

DES: DJR | DR: DJR | APPROVED:
CHK: JZB | CHK: JZB

MINNESOTA PROJECT NO. 2516-25033
WISCONSIN PROJECT NO. 7210-00-06

SHEET NO. 10 OF 24 SHEETS

BRIDGE NO. 25033

drachel
11/4/2015 8:18 PM
c:\pwworking\omaa\d1023587\00000000\177092.tb1
pw:\\PWAPPOMAD01.HDRTHCentral.Omaha\Documents\007569\00000000\177092\13.00.CAD\Bridge\Plan Shts\Br25033 Over River\5006

drochel
1:43:26 PM
11/4/2015
c:\pwworking\omo\d1023587\000000000177092.tbl
pw:\\PWAPPOMA001:NorthCentral_Omaha\Documents\007569\000000000177092\13.00_CAD\Bridge\Plan Shts\Br25033 Over River\5007

NO.	DATE	REVISION DESCRIPTION	DR.	CHK.	APP'D.

HDR

TITLE:

WATER ELEVATION CHART

DES: DJR
CHK: JZB
DR: DJR
CHK: JZB
APPROVED:

MINNESOTA PROJECT NO. 2516-25033
WISCONSIN PROJECT NO. 7210-00-06

SHEET NO. 11 OF 24 SHEETS

BRIDGE NO. 25033

PERCENT OF TIME AT OR ABOVE INDICATED ELEVATION *

ELEV.	JAN	FEB	MAR	APR	MAY	JUN	JUL	AUG	SEP	OCT	NOV	DEC	ALL YEAR	APR-OCT
684.20				0.11										
684.00				0.34										
683.80				0.46										
683.60				0.69										
683.40				0.69										
683.20				0.80										0.11
683.00				0.80										0.11
682.80				1.03										0.15
682.60				1.03										0.15
682.40				1.03		0.23							0.10	0.18
682.20				1.15		0.46							0.13	0.23
682.00				1.26		0.46	0.11						0.15	0.26
681.80				1.38		0.57	0.11						0.17	0.29
681.60				1.61	0.11	0.57	0.22						0.21	0.35
681.40				2.18	0.44	0.57	0.33						0.29	0.50
681.20				2.53	0.56	0.57	0.33						0.33	0.56
681.00				2.64	0.67	0.57	0.44						0.36	0.61
680.80				2.87	0.67	0.69	0.56						0.40	0.68
680.60				2.99	0.78	0.69	1.00						0.45	0.77
680.40				3.10	1.22	0.69	1.22						0.52	0.89
680.20				3.91	1.33	0.69	1.67						0.63	1.08
680.00				4.14	1.89	0.80	1.78						0.72	1.22
679.80				4.71	2.34	0.80	1.78						0.80	1.37
679.60				5.29	2.67	0.80	1.89						0.89	1.51
679.40			0.33	5.86	2.89	0.80	1.89						0.98	1.63
679.20			0.44	6.44	3.34	0.80	2.00		0.46	0.11			1.13	1.87
679.00			0.78	6.90	3.45	0.80	2.11		0.57	0.22			1.24	2.00
678.80			1.11	7.36	3.78	1.72	2.22		0.57	0.33			1.43	2.27
678.60			1.22	7.93	3.78	2.18	2.56		0.57	0.33			1.55	2.47
678.40			1.45	8.51	4.00	2.30	2.56		0.69	0.44			1.66	2.63
678.20			1.56	9.77	4.56	2.53	2.78	0.11	0.69	0.44			1.87	2.96
678.00			1.67	11.84	5.01	2.64	3.00	0.11	0.69	0.56			2.13	3.38
677.80			1.89	14.02	5.67	2.76	3.11	0.11	0.69	0.56			2.40	3.82
677.60			2.22	16.67	6.56	2.76	3.23	0.22	0.69	0.56			2.74	4.35
677.40			2.22	18.39	7.79	2.99	3.45	0.22	0.80	0.67			3.04	4.87
677.20			2.67	20.11	8.57	2.99	3.67	0.33	0.80	0.67			3.32	5.27
677.00			3.34	22.07	10.01	2.99	3.78	0.33	0.80	0.78			3.67	5.78
676.80			4.23	24.60	11.12	3.33	4.00	0.33	0.80	0.78			4.10	6.38
676.60			5.12	26.44	13.01	3.45	4.12	0.44	0.80	0.89			4.52	6.98
676.40			5.45	27.93	14.68	3.56	4.67	0.44	0.92	1.00			4.89	7.56
676.20			5.90	29.08	16.57	3.91	5.12	0.44	0.92	1.00			5.25	8.11
676.00			6.67	30.23	17.69	4.37	5.56	0.44	0.92	1.11			5.59	8.57
675.80			7.56	32.87	19.58	4.60	6.01	0.78	0.92	1.11			6.13	9.36
675.60			8.12	35.86	21.36	4.83	6.34	1.00	0.92	1.22			6.65	10.17
675.40			8.45	38.51	24.58	5.86	6.79	1.33	1.03	2.00			7.40	11.39
675.20			8.79	40.80	27.14	6.90	7.12	1.67	1.03	2.67			8.03	12.42
675.00			9.01	42.41	28.92	8.97	7.79	1.78	1.03	3.34			8.62	13.41
674.80			10.01	43.91	30.70	10.34	8.68	2.56	1.03	4.12			9.30	14.42
674.60			10.34	46.32	33.37	10.92	9.57	3.23	1.15	4.45			9.98	15.52
674.40			10.90	48.51	36.15	11.84	10.68	3.67	1.26	4.67	0.11		10.68	16.63
674.20			11.79	51.26	39.27	12.87	11.46	4.00	1.49	5.01	0.57		11.52	17.85
674.00			12.68	53.33	42.38	13.91	12.68	4.45	1.61	5.78	1.38		12.39	19.11
673.80			13.68	55.29	44.83	15.75	14.13	4.67	1.72	6.12	1.95		13.23	20.30
673.60		0.24	15.02	57.36	46.27	17.70	15.57	5.34	2.07	6.79	2.41		14.11	21.53
673.40		0.37	16.24	60.00	48.94	20.46	17.58	5.67	2.64	7.68	2.64		15.24	23.22
673.20		0.49	17.13	61.84	50.28	23.33	20.02	6.01	3.22	8.79	3.10		16.24	24.72
673.00		0.61	18.58	63.91	51.84	26.78	22.80	6.34	4.14	10.23	3.91		17.49	26.51
672.80		0.73	19.69	65.75	53.50	29.43	25.03	6.90	5.75	11.12	4.60		18.60	28.13
672.60		0.73	21.69	66.90	54.62	32.99	26.36	8.12	6.90	11.79	5.29	0.56	19.72	29.58
672.40		0.85	22.25	68.16	56.06	34.71	28.14	9.45	7.93	12.46	6.32	0.78	20.66	30.91
672.20		0.98	23.36	70.00	57.73	36.90	29.48	11.12	9.31	13.35	7.24	1.35	21.80	32.47
672.00		1.10	24.92	71.49	58.95	38.97	31.26	12.12	10.23	14.79	8.51	1.68	22.91	33.89
671.80		1.10	25.92	72.87	60.18	41.84	32.93	12.68	11.03	15.68	9.54	2.35	23.92	35.22
671.60	0.33	1.22	27.03	74.37	61.85	46.32	35.60	13.57	12.64	16.57	11.95	2.80	25.43	37.17
671.40	0.44	1.34	28.92	75.52	62.85	51.26	39.04	14.35	13.91	17.46	13.33	3.14	26.88	39.09
671.20	0.44	1.59	30.03	76.78	64.18	53.56	41.49	16.02	15.98	18.02	14.94	4.26	28.19	40.75
671.00	0.89	1.83	31.92	78.39	66.41	57.01	43.60	17.46	17.93	19.47	17.13	5.27	29.86	42.78
670.80	1.22	1.95	34.04	79.54	68.19	59.89	45.38	20.36	19.43	21.36	18.97	7.06	31.54	44.76
670.60	1.33	2.44	36.82	80.80	69.63	63.10	47.72	22.02	21.38	23.69	21.15	8.52	33.32	46.79
670.40	1.67	2.44	39.04	81.15	70.86	65.52	49.61	25.14	24.48	25.25	23.56	10.99	35.08	48.74
670.20	2.45	2.80	41.27	81.95	73.08	67.01	52.61	27.36	26.32	27.03	28.97	13.68	37.16	50.66
670.00	2.89	2.93	43.94	82.64	75.31	70.00	55.28	29.37	28.39	28.48	34.25	16.82	39.32	52.67
669.80	3.45	3.29	46.16	83.68	76.86	72.64	59.62	30.92	30.92	29.59	39.20	21.64	41.63	54.79
669.60	7.23	4.27	48.94	85.86	78.64	74.25	63.29	33.93	33.91	33.15	43.68	27.24	44.68	57.48
669.40	11.23	5.85	52.06	87.24	80.20	76.21	64.96	37.49	36.78	37.26	50.23	36.32	48.15	59.93
669.20	18.24	10.73	57.17	88.62	81.76	77.59	67.41	41.16	39.43	41.38	54.94	42.83	51.94	62.39
669.00	27.14	19.15	62.63	91.03	82.98	78.51	69.30	44.49	41.95	44.27	60.11	48.43	55.98	64.57
668.80	35.71	27.32	67.41	93.33	84.20	80.11	71.64	49.28	46.44	49.50	63.56	54.60	60.39	67.71
668.60	46.38	36.83	69.86	95.29	86.21	81.26	73.53	54.06	51.38	54.73	67.36	59.87	64.84	70.85
668.40	56.40	47.44	73.75	97.93	88.21	82.99	76.31	60.51	57.13	59.84	71.49	66.14	69.93	74.64
668.20	64.85	59.88	78.31	98.05	90.99	85.29	78.09	67.52	62.76	64.29	77.13	71.75	74.96	78.09
668.00	72.41	71.83	86.99	99.20	92.77	89.20	80.31	75.42	70.69	69.30	83.33	77.13	80.73	82.36
667.80	79.87	79.88	93.33	99.89	96.00	92.41	84.65	81.98	78.39	77.31	89.08	82.40	86.27	87.19
667.60	86.87	87.93	96.77	100.00	99.22	95.98	92.32	89.21	88.97	85.65	93.56	88.12	92.06	93.02
667.40	93.21	93.66	99.33	100.00	99.78	98.28	98.44	96.11	96.32	95.66	96.09	94.84	96.83	97.79
667.20	96.11	98.29	100.00	100.00	100.00	99.89	100.00	99.22	99.31	99.22	98.16	98.88	99.09	99.66
667.00	98.55	99.51	100.00	100.00	100.00	100.00	100.00	100.00	99.89	99.89	99.54	99.89	99.77	99.97
666.80	100.00	100.00	100.00	100.00	100.00	100.00	100.00	100.00	100.00	100.00	100.00	100.00	100.00	100.00

* ELEVATIONS BY U.S. ARMY CORPS OF ENGINEERS ST. PAUL DISTRICT AT LOCK AND DAM 3 TAILWATER FOR PERIOD 1972 TO 2000. ELEVATIONS IN TABLE REFERENCE DATUM = 1912.

NAVD 88 = (DATUM 1912) - 0.357 FEET

FORCEMAIN SURVEY POINTS

POINT	X	Y	ELEV.	DESCRIPTION
1251	656447.062	237265.986	678.59	16" DIP TOP(3)
1252	656412.833	237238.184	678.24	16" DIP TOP(3)
1253	656386.073	237215.998	678.23	16" DIP TOP(3)
1254	656356.176	237192.224	678.61	16" DIP TOP(3)
1255	656340.857	237179.561	678.51	16" DIP TOP(3)
0001	656424.295	237237.168	N/A	16" CIP TOP(4)
0002	656364.662	237183.845	N/A	16" CIP TOP(4)

(3) POINTS TAKEN FROM FILE 576A.DWG
(4) POINTS SCALED FROM FILE BASE.DWG
(BOTH FILES PROVIDED BY CITY OF RED WING)

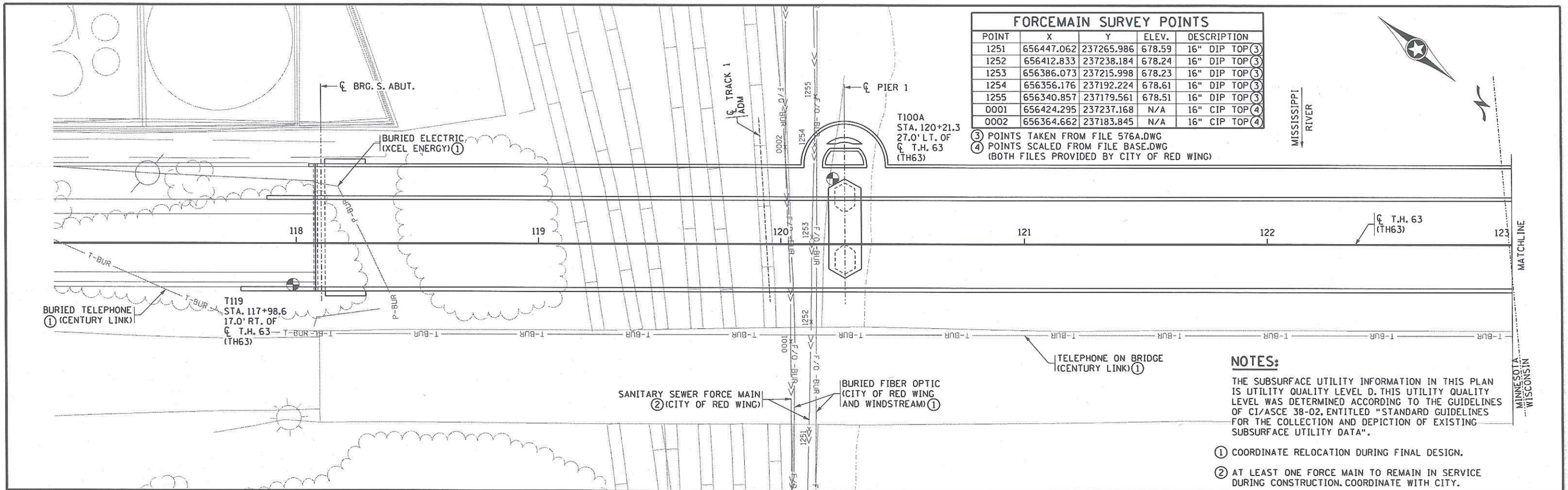

NOTES:

THE SUBSURFACE UTILITY INFORMATION IN THIS PLAN IS UTILITY QUALITY LEVEL D. THIS UTILITY QUALITY LEVEL WAS DETERMINED ACCORDING TO THE GUIDELINES OF CI/ASCE 38-02, ENTITLED "STANDARD GUIDELINES FOR THE COLLECTION AND DEPICTION OF EXISTING SUBSURFACE UTILITY DATA".

(1) COORDINATE RELOCATION DURING FINAL DESIGN.

(2) AT LEAST ONE FORCE MAIN TO REMAIN IN SERVICE DURING CONSTRUCTION. COORDINATE WITH CITY.

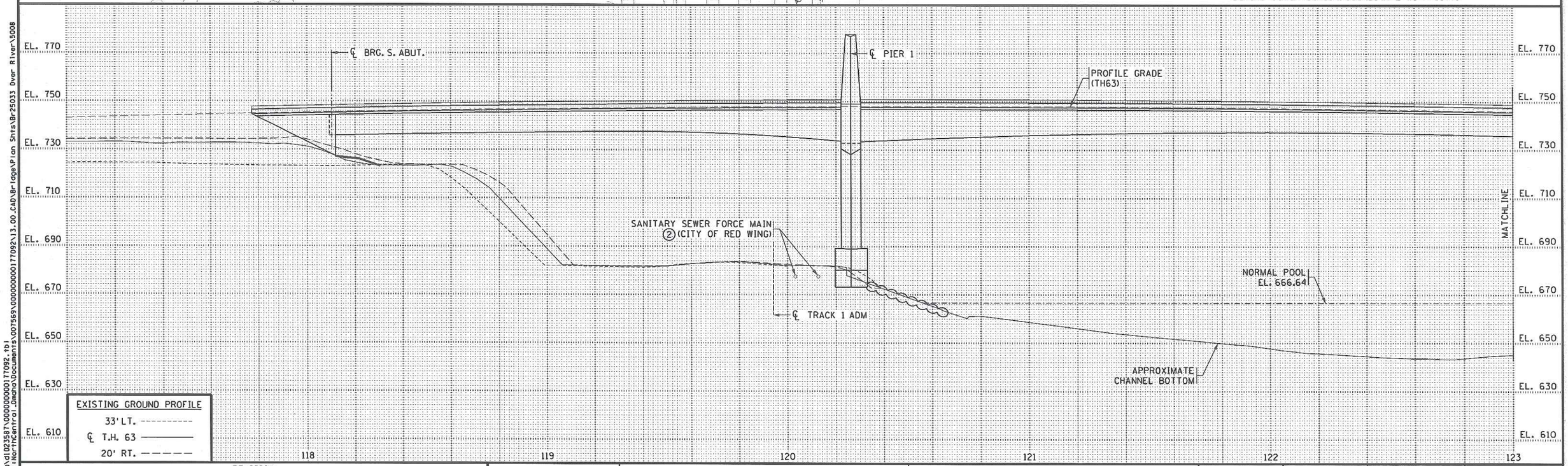

REVISION					
NO.	DATE	DESCRIPTION	DR.	CHK.	APP'D.

HDR

TITLE:

PLAN AND PROFILE
SHEET 1 OF 3

DES: DJR | DR: DJR | APPROVED:
CHK: JZB | CHK: JZB

MINNESOTA PROJECT NO. 2516-25033
WISCONSIN PROJECT NO. 7210-00-06

SHEET NO. 12 OF 24 SHEETS

BRIDGE NO. 25033

drachel
11/4/15 PM
11/4/2015
c:\pwworking\omaa\d1023587\000000001177092.tb1
pw:\\PWAPPOMA001:Northcentral.Omaha\Documents\007569\000000000177092\13.00.CAD\Bridge\Plan Shts\Br25033 Over River\5008

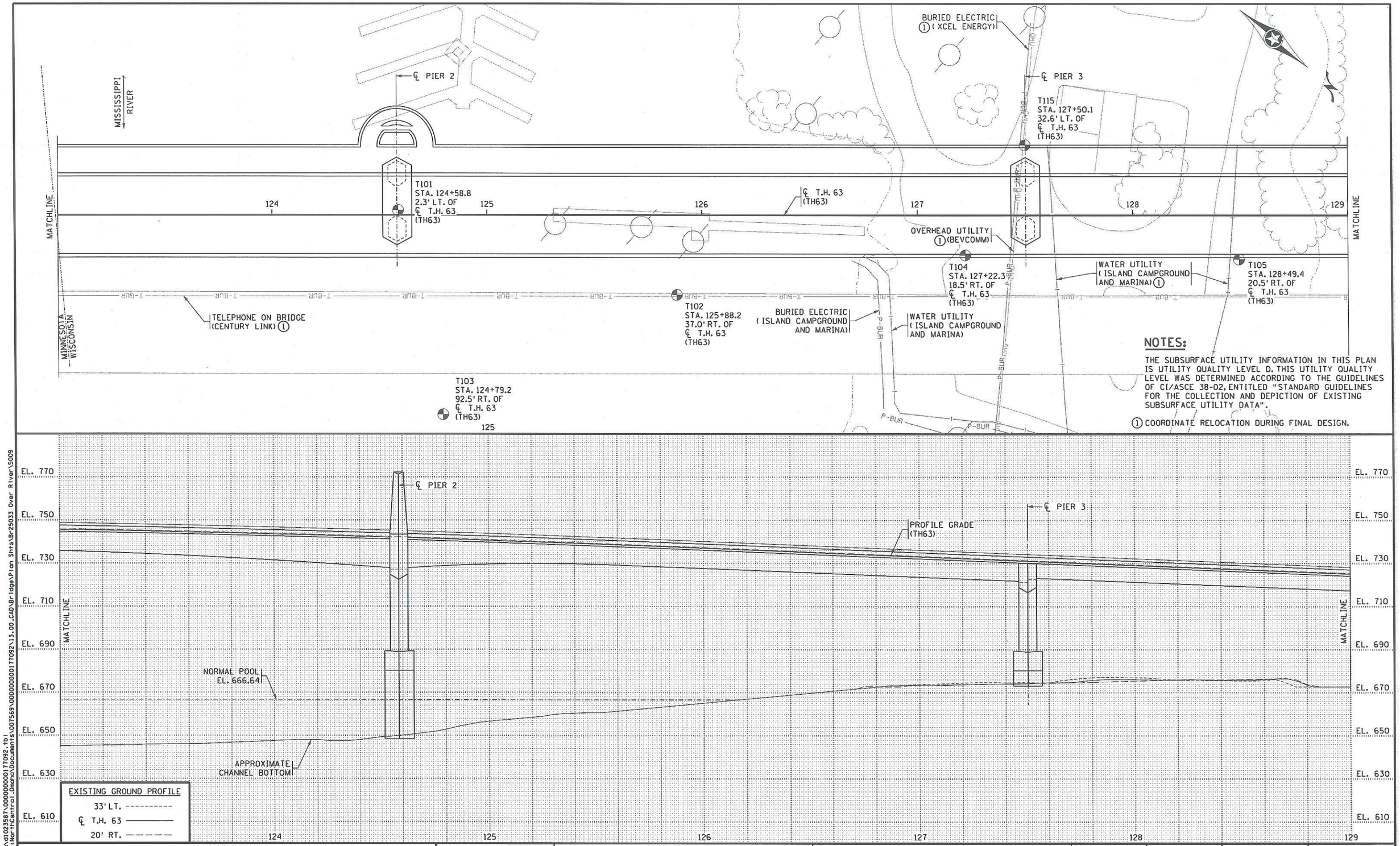

NOTES:

THE SUBSURFACE UTILITY INFORMATION IN THIS PLAN IS UTILITY QUALITY LEVEL D. THIS UTILITY QUALITY LEVEL WAS DETERMINED ACCORDING TO THE GUIDELINES OF CI/ASCE 38-02, ENTITLED "STANDARD GUIDELINES FOR THE COLLECTION AND DEPICTION OF EXISTING SUBSURFACE UTILITY DATA".

(1) COORDINATE RELOCATION DURING FINAL DESIGN.

REVISION					
NO.	DATE	DESCRIPTION	DR.	CHK.	APP'D.

HDR

TITLE:

PLAN AND PROFILE
SHEET 2 OF 3

DES: DJR | DR: DJR | APPROVED:
CHK: JZB | CHK: JZB

MINNESOTA PROJECT NO. 2516-25033
WISCONSIN PROJECT NO. 7210-00-06

SHEET NO. 13 OF 24 SHEETS

BRIDGE NO.
25033

dr=chal
11/4/15 2 PM
11/4/15
cr:\pwworking\omn\d1025587\000000000177092\13.00.CAD\Bridge\Plan Shts\Br25033 Over River\5009
pw:\\PWAPPOMAC01:North Central.Omaha\Documents\007569\000000000177092.*bi

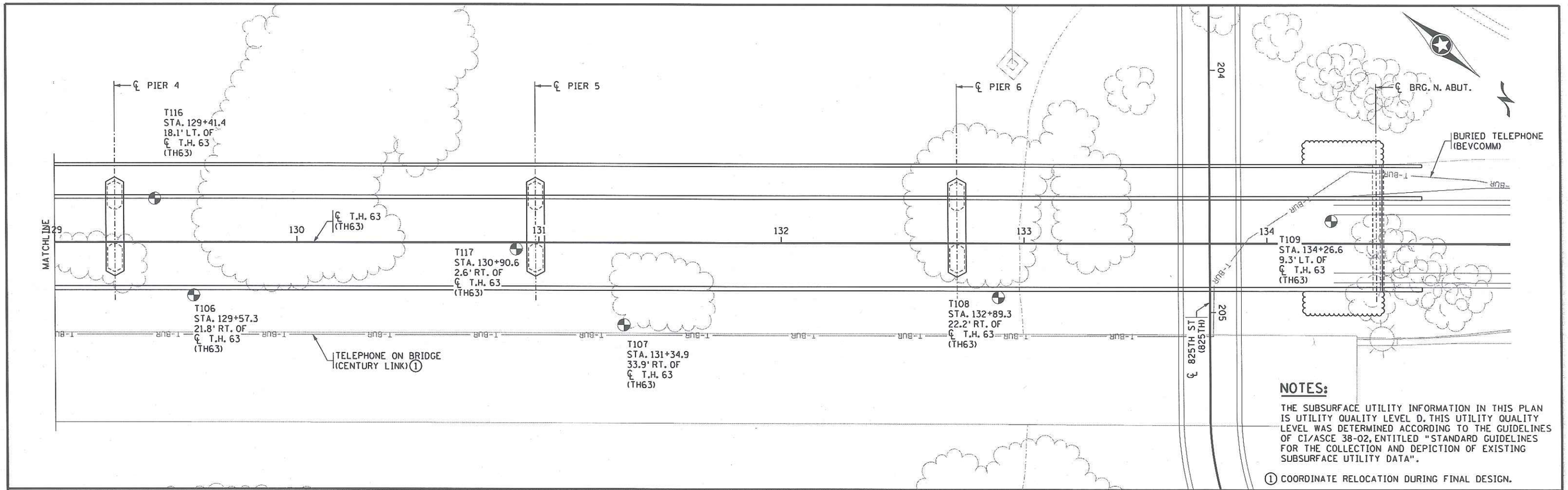

NOTES:

THE SUBSURFACE UTILITY INFORMATION IN THIS PLAN IS UTILITY QUALITY LEVEL D. THIS UTILITY QUALITY LEVEL WAS DETERMINED ACCORDING TO THE GUIDELINES OF CI/ASCE 38-02, ENTITLED "STANDARD GUIDELINES FOR THE COLLECTION AND DEPICTION OF EXISTING SUBSURFACE UTILITY DATA".

1 COORDINATE RELOCATION DURING FINAL DESIGN.

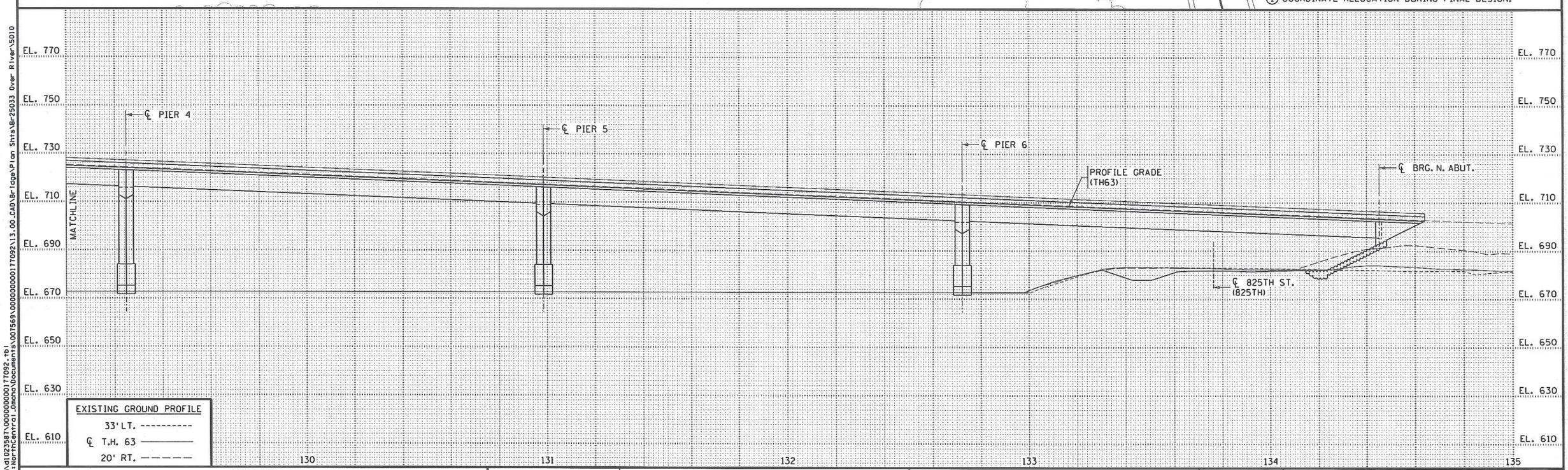

REVISION					
NO.	DATE	DESCRIPTION	DR.	CHK.	APP'D.

HDR

TITLE:

PLAN AND PROFILE
SHEET 3 OF 3

DES: DJR | DR: DJR | APPROVED:
CHK: JZB | CHK: JZB

MINNESOTA PROJECT NO. 2516-25033
WISCONSIN PROJECT NO. 7210-00-06

SHEET NO. 14 OF 24 SHEETS

BRIDGE NO.
25033

drachel
11/4/15 PM
11/4/2015
c:\pwworking\omn\d1023587\00000000001177092.tbl
pw:\\PWAPPOMA001:NorthCentral.Dmcha\Documents\00759\00000000001177092\13.00.CAD\Bridge\Plan Shts\Br25033 Over River\5010

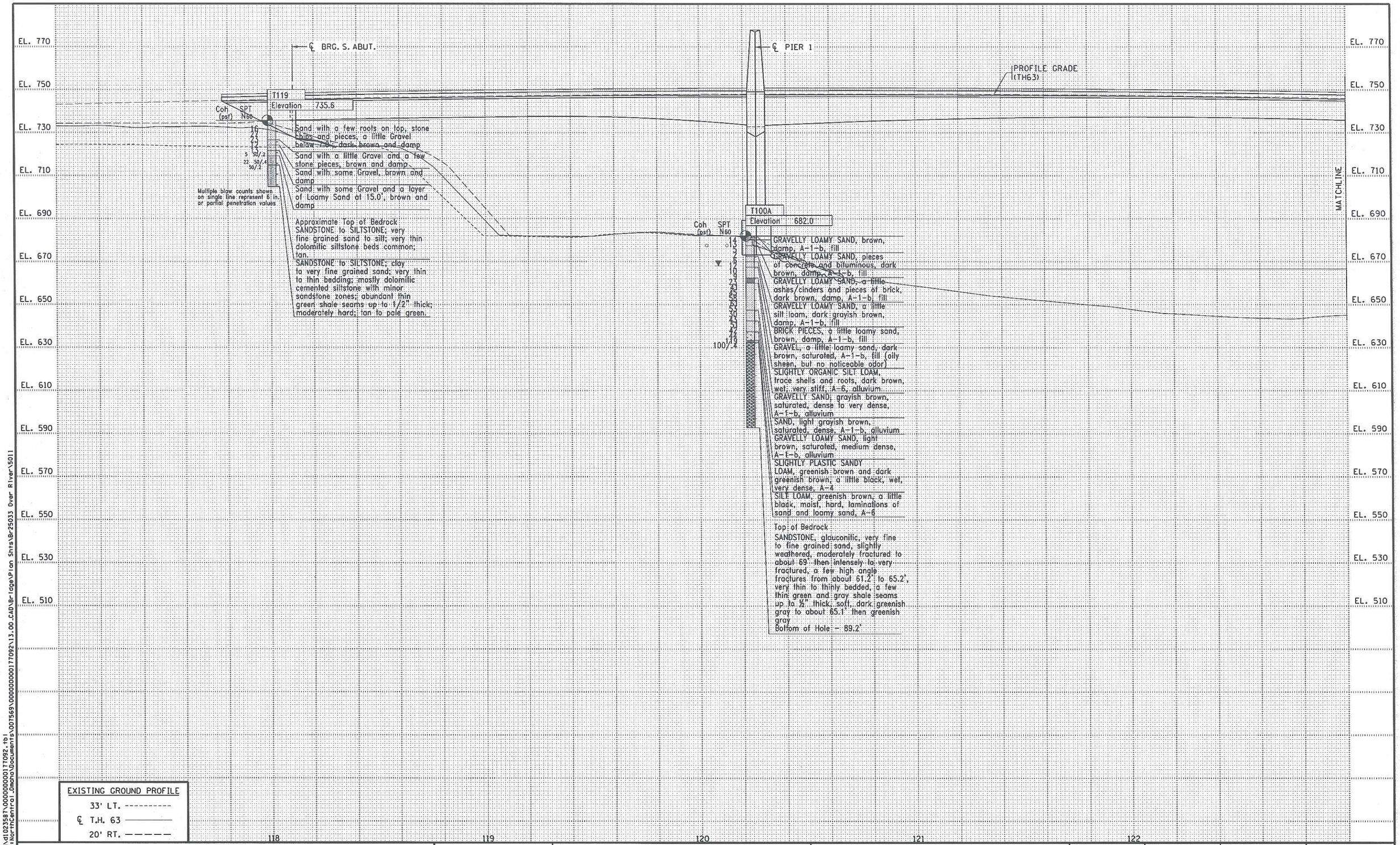

REVISION					
NO.	DATE	DESCRIPTION	DR.	CHK.	APP'D.

HDR

TITLE:

BORINGS
SHEET 1 OF 3

DES: DJR	DR: DJR	APPROVED:
CHK: JZB	CHK: JZB	

MINNESOTA PROJECT NO. 2516-25033
WISCONSIN PROJECT NO. 7210-00-06

SHEET NO. 15 OF 24 SHEETS

BRIDGE NO.
25033

drachel
11/4/14 PM
11/4/2015
c:\pwworking\omn\d102358?\00000000177092.tb1
pw:\\PWAPPOAA001:NorthCentral_Dmcha\Documents\007569\00000000177092\13.00.CAD\Bridge\Plan Shts\Br25033 Over River\5011

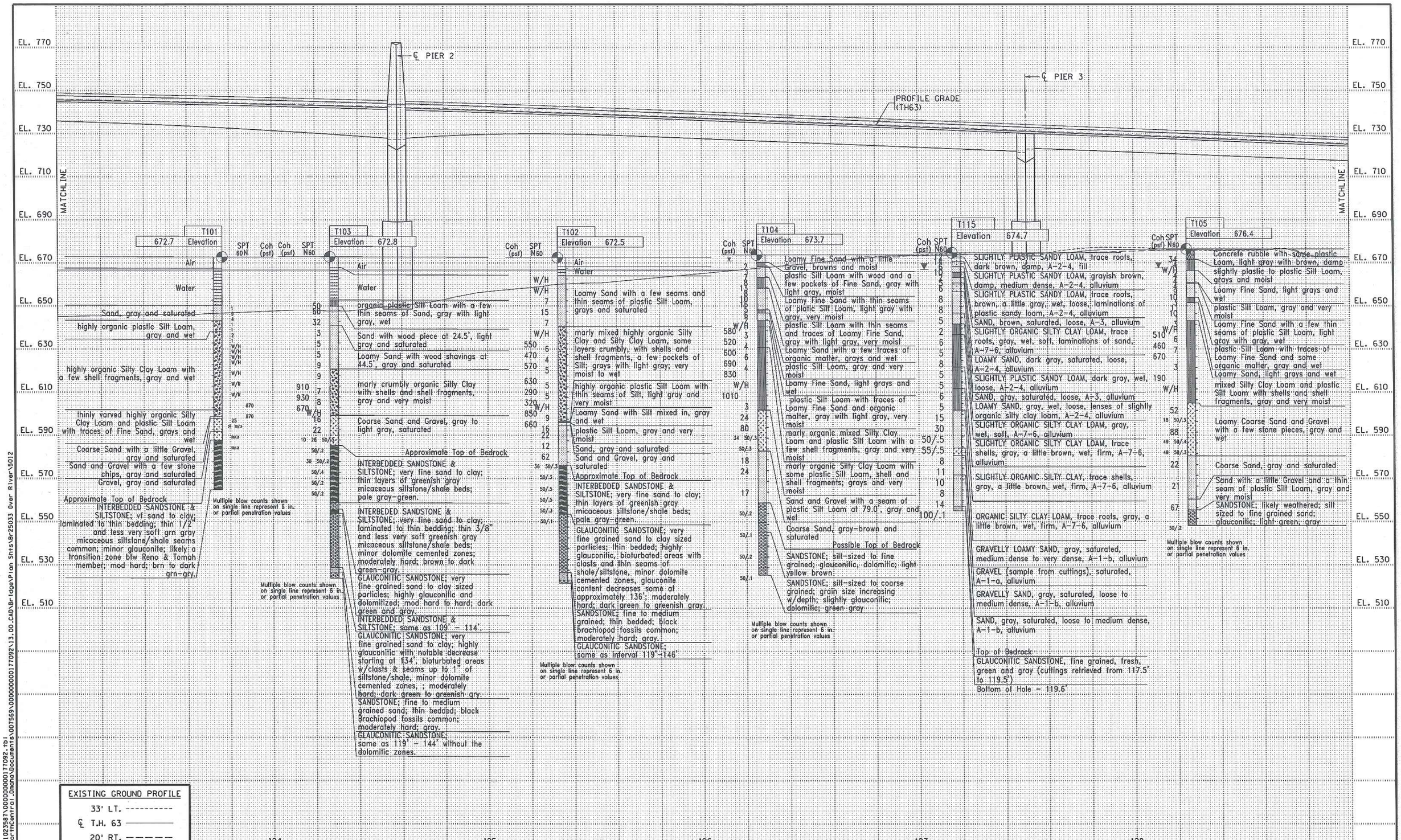

REVISION					
NO.	DATE	DESCRIPTION	DR.	CHK.	APP'D.

HDR

TITLE: BORINGS SHEET 2 OF 3

DES: DJR | DR: DJR | APPROVED:
CHK: JZB | CHK: JZB

MINNESOTA PROJECT NO. 2516-25033
WISCONSIN PROJECT NO. 7210-00-06

SHEET NO. 16 OF 24 SHEETS

BRIDGE NO. 25033

c:\pwworking\ama\d1023587\00000000017092.tb1
part:\\WAPPUMA001\NorthCentral.Ohana\Documents\007569\00000000017092\13.00.CAD\Bridge\Plan Shts\Br25033 Over River\5012
dracha1 PW
11/4/15
11/4/2015

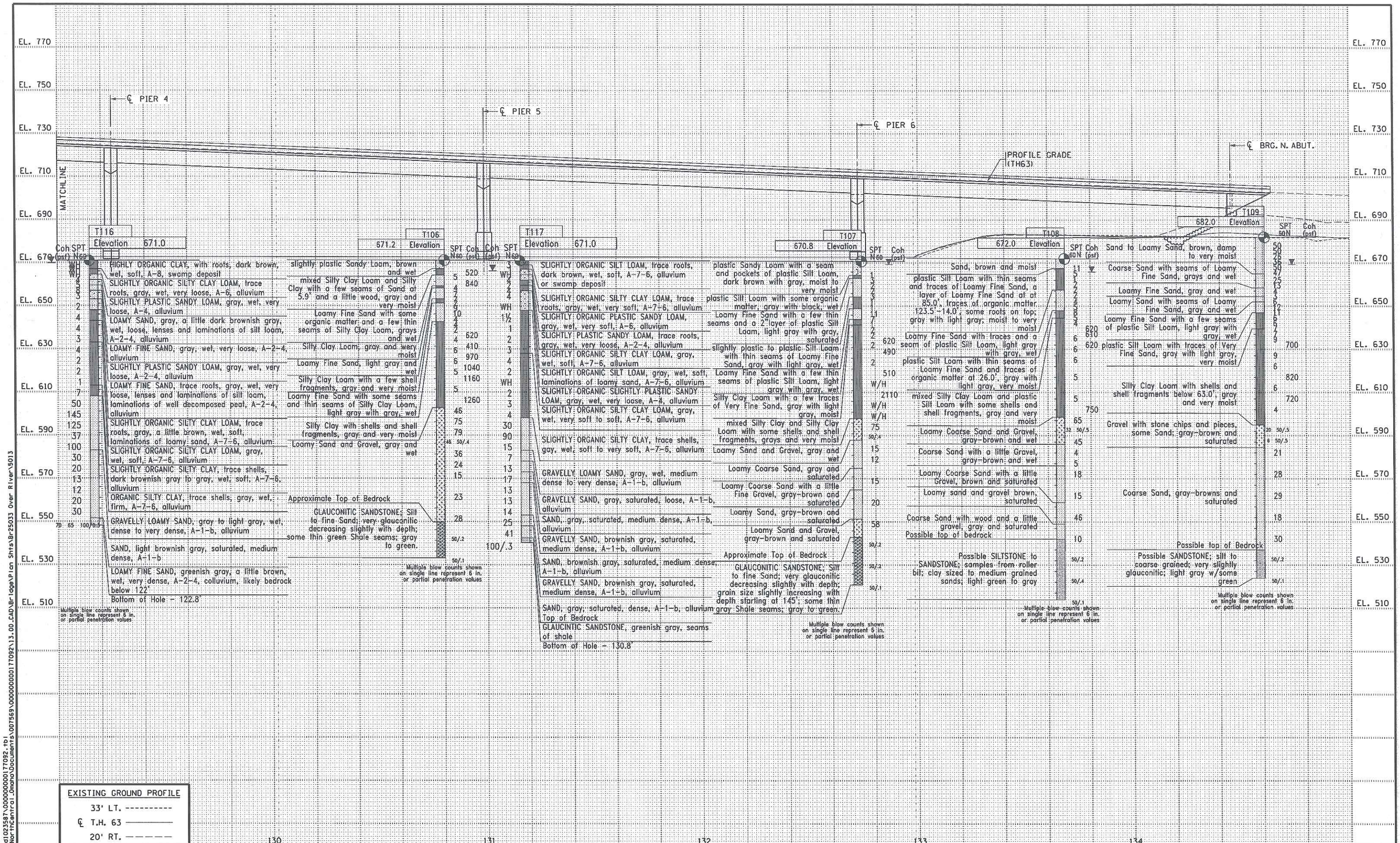

REVISION					
NO.	DATE	DESCRIPTION	DR.	CHK.	APP'D.

HDR

TITLE: BORINGS SHEET 3 OF 3

DES: DJR	DR: DJR	APPROVED:
CHK: JZB	CHK: JZB	

MINNESOTA PROJECT NO. 2516-25033
WISCONSIN PROJECT NO. 7210-00-06

SHEET NO. 17 OF 24 SHEETS

BRIDGE NO. 25033

dr:cahal
11:44:49 PM
11/4/2015
d:\bework\ngwama\d1023587\000000000177092.tbl
pw:\\PWAPPWAU01.Northcentral.Lmano\Documents\007569\000000000177092\13.00_CADD\Br-Page\Plan Shts\Br25033 Over River\5013

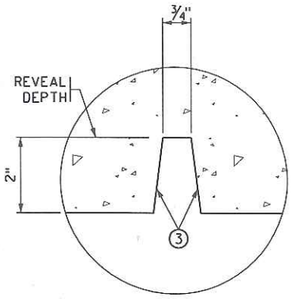

SECTION A-A

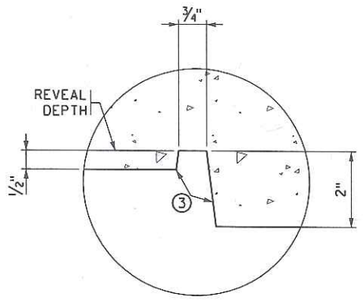

SECTION B-B

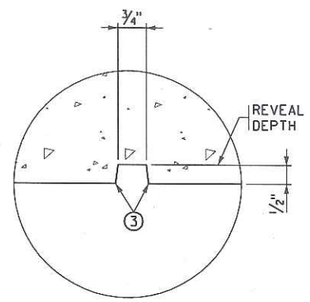

SECTION C-C

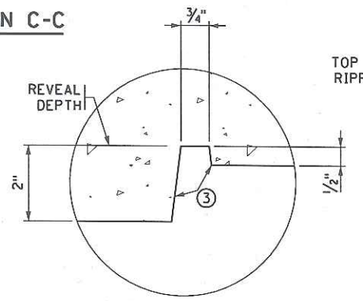

SECTION D-D

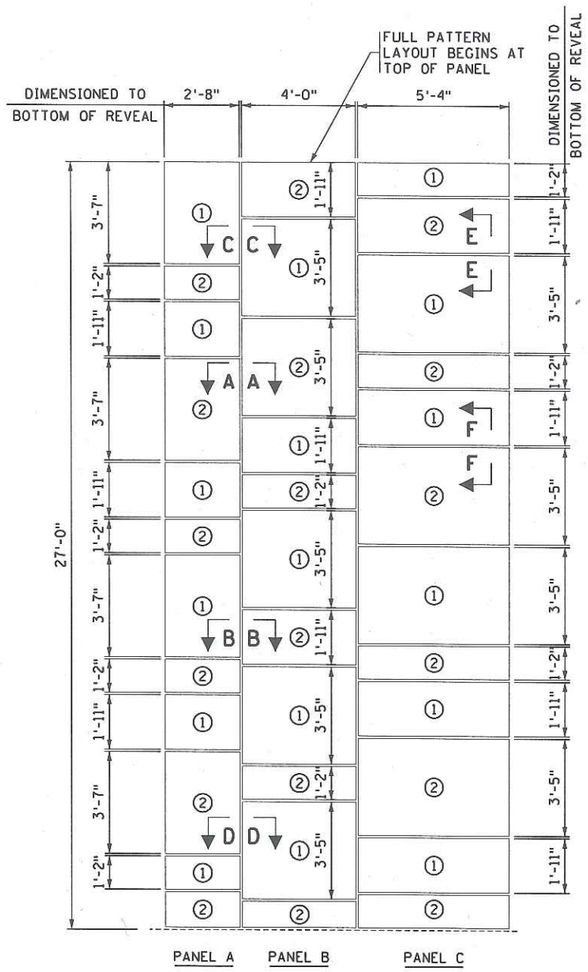

PANEL DETAILS

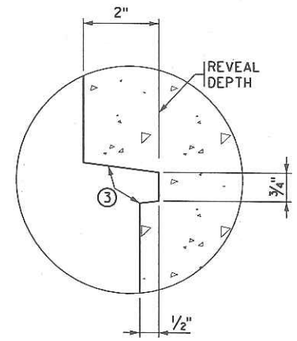

SECTION E-E

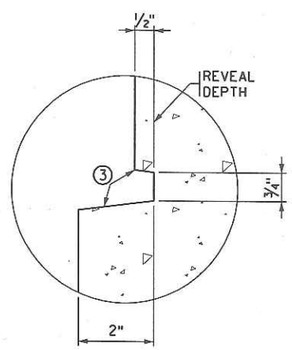

SECTION F-F

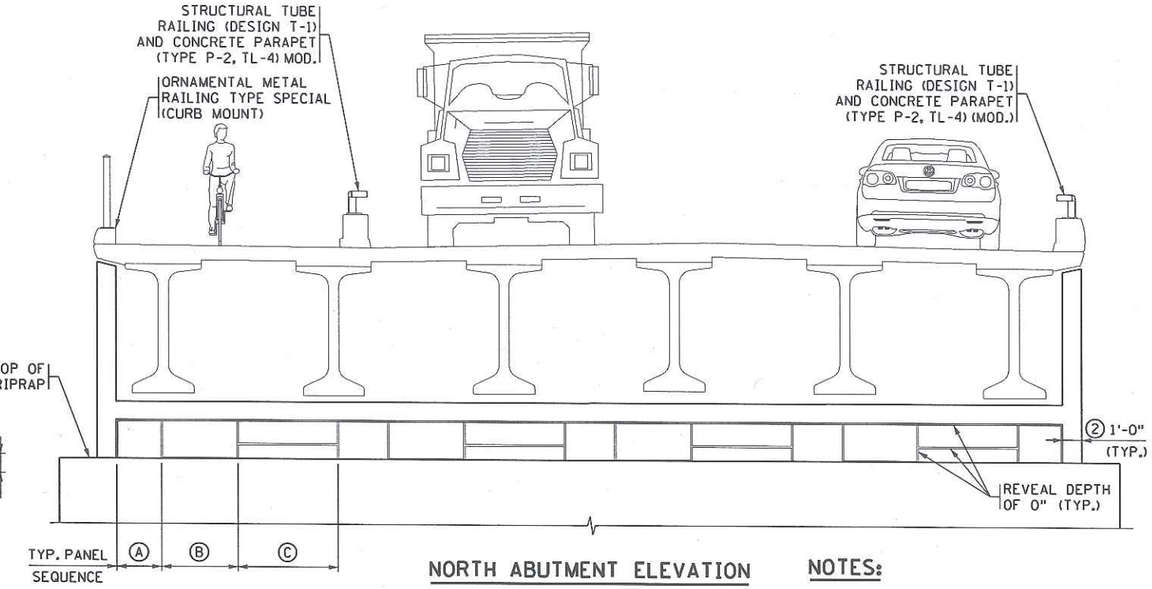

NORTH ABUTMENT ELEVATION

(SEE BARRIER SECTIONS FOR MASK WALL DETAILS)

NOTES:

FOR ADDITIONAL AESTHETIC DETAILS INCLUDING LOGO, COLORS, TEXTURES AND TREATMENTS SEE THE VISUAL QUALITY MANUAL.

ALL REVEALS TO BE AT A DEPTH OF 0".

1 DENOTES +1/2" FROM REVEAL DEPTH

2 DENOTES +2" FROM REVEAL DEPTH

3 ALL REVEAL SLOPES 1 : 8

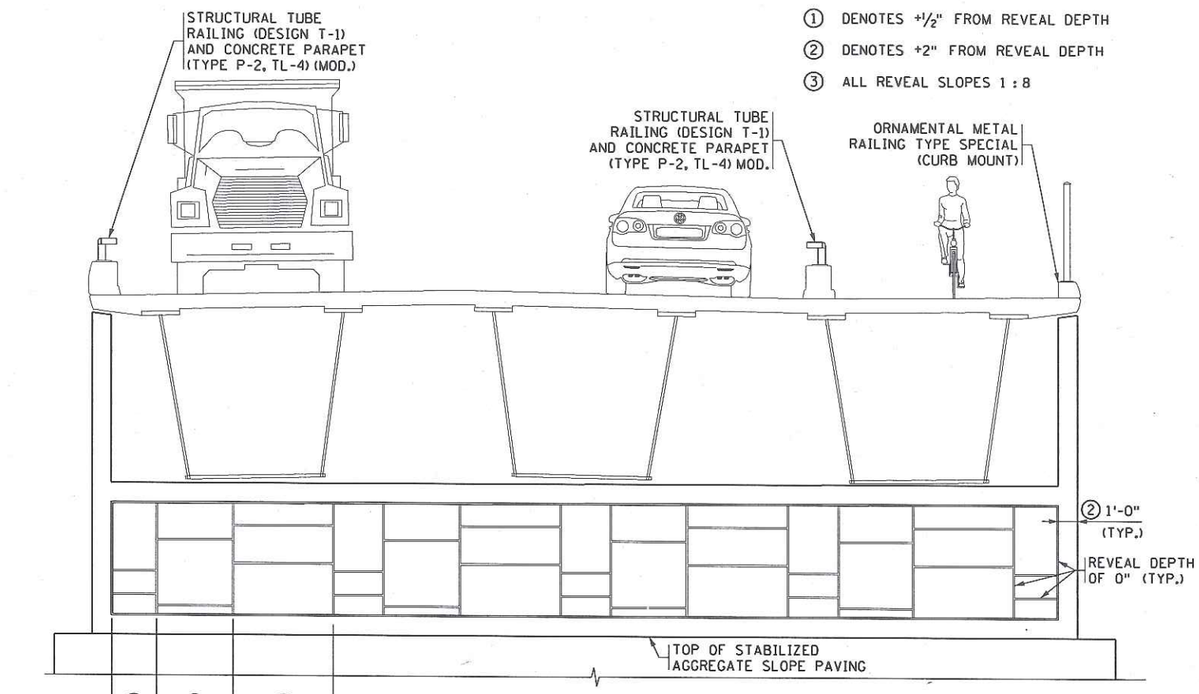

SOUTH ABUTMENT ELEVATION

(SEE BARRIER SECTIONS FOR MASK WALL DETAILS)

REVISION					
NO.	DATE	DESCRIPTION	DR.	CHK.	APP'D.

HDR

TITLE: AESTHETIC DETAILS SHEET 1 OF 7

DES: DJR	DR: DJR	APPROVED:	
CHK: JZB	CHK: JZB		

MINNESOTA PROJECT NO. 2516-25033
WISCONSIN PROJECT NO. 7210-00-06

SHEET NO. 18 OF 24 SHEETS

BRIDGE NO. 25033

drschel 1:45:06 PM 11/4/2015
d:\pwworking\oma\d1023587\00000000001177092.tb1
pw:\\PWAPPOMA001.Northcentral.Jacobs\Documents\007569\00000000001177092\13.00_CAD\Bridge\Plan Shts\Br25033 Over River\5014

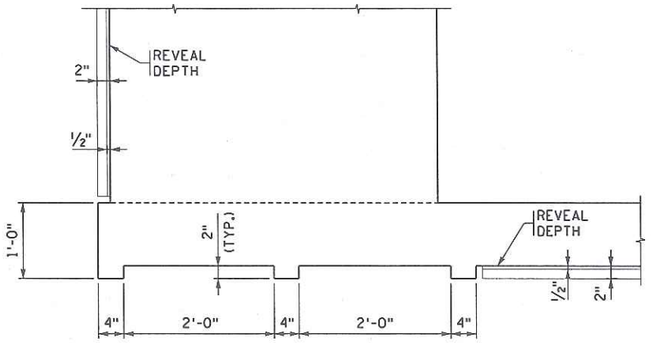

SECTION G-G

NORTHEAST WINGWALL SHOWN, SOUTHEAST WINGWALL MIRRORED

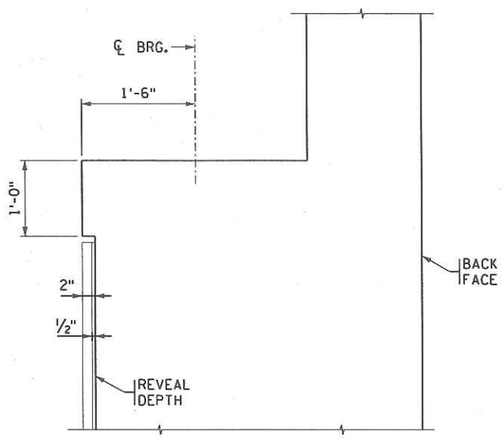

ABUTMENT SECTION

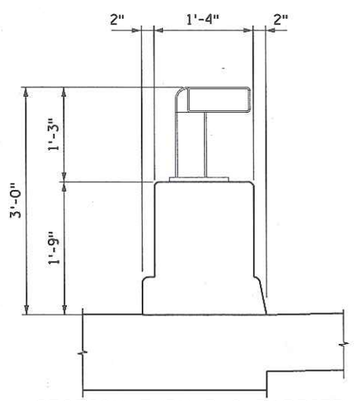

SECTION THRU P-2 BARRIER

(BETWEEN TRAIL AND TRAFFIC)

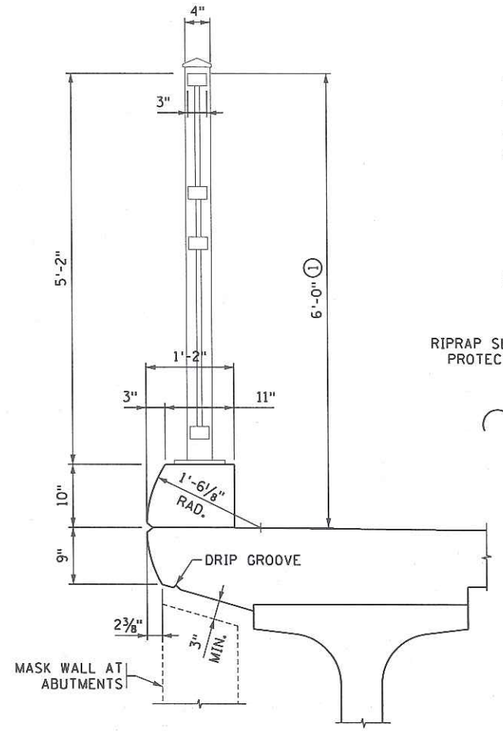

SECTION THRU ORNAMENTAL METAL RAILING

(AT WEST FASCIA, TALL HEIGHT)

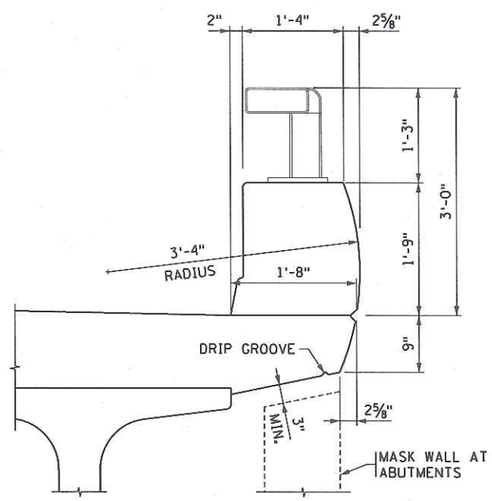

SECTION THRU P-2 BARRIER (MOD.)

(AT EAST FASCIA)

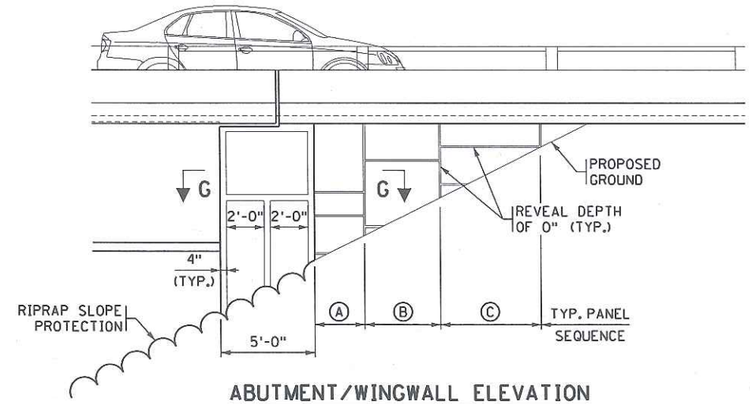

ABUTMENT/WINGWALL ELEVATION

(NORTHEAST WINGWALL SHOWN, NORTHWEST WINGWALL SIMILAR)

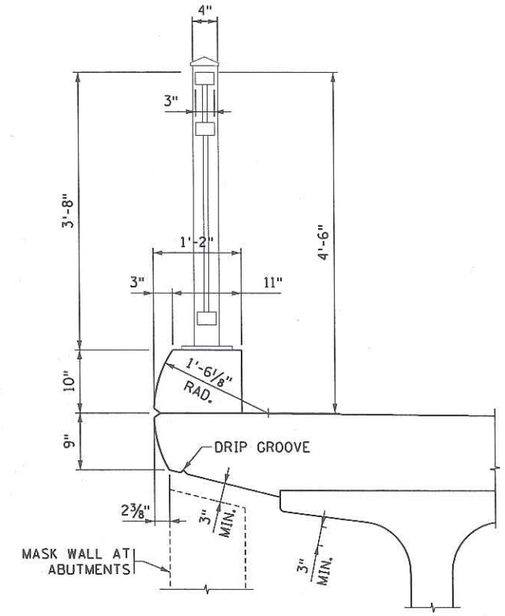

SECTION THRU ORNAMENTAL METAL RAILING

(AT WEST FASCIA, STANDARD HEIGHT)

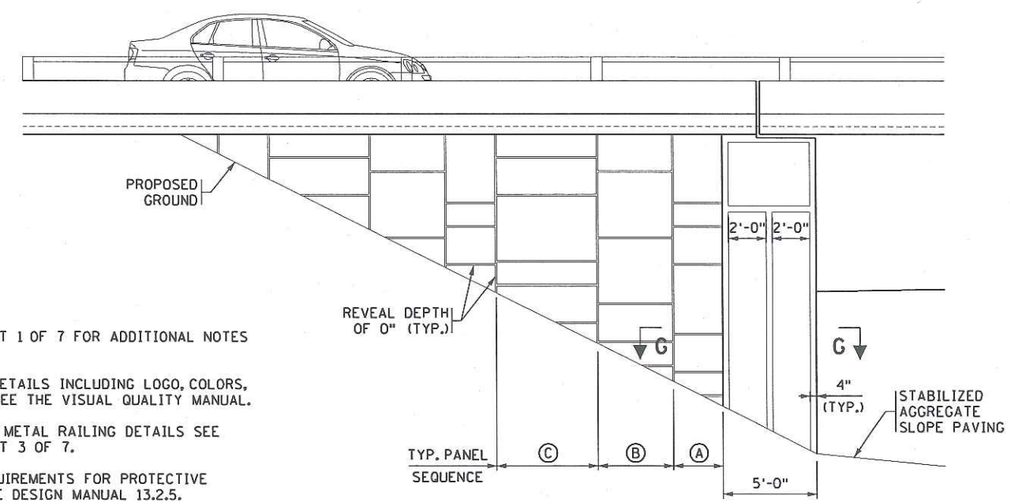

ABUTMENT/WINGWALL ELEVATION

(SOUTHEAST WINGWALL SHOWN, SOUTHWEST WINGWALL SIMILAR)

NOTES:

SEE AESTHETIC DETAILS SHEET 1 OF 7 FOR ADDITIONAL NOTES AND PANEL DETAILS.

FOR ADDITIONAL AESTHETIC DETAILS INCLUDING LOGO, COLORS, TEXTURES AND TREATMENTS SEE THE VISUAL QUALITY MANUAL.

FOR ADDITIONAL ORNAMENTAL METAL RAILING DETAILS SEE SEE AESTHETIC DETAILS SHEET 3 OF 7.

① METAL RAILING TO MEET REQUIREMENTS FOR PROTECTIVE SCREENING PER MNDOT BRIDGE DESIGN MANUAL 13.2.5. SEE SHEET 20 FOR LIMITS.

REVISION					
NO.	DATE	DESCRIPTION	DR.	CHK.	APP'D.

HDR

TITLE: AESTHETIC DETAILS SHEET 2 OF 7

DES: DJR | DR: DJR | APPROVED:
CHK: JZB | CHK: JZB

MINNESOTA PROJECT NO. 2516-25033
WISCONSIN PROJECT NO. 7210-00-06

SHEET NO. 19 OF 24 SHEETS

BRIDGE NO. 25033

c:\pwworking\omc\d102587\00000000001177092.rbl
pw:\\PWAPPQA001:NORTHCentral.Omaha\Documents\007569\00000000001177092\13.00.CAD\BridgePlan Shts\Br25033 Over River\5015
graehel
11/4/15 1:45:15 PM

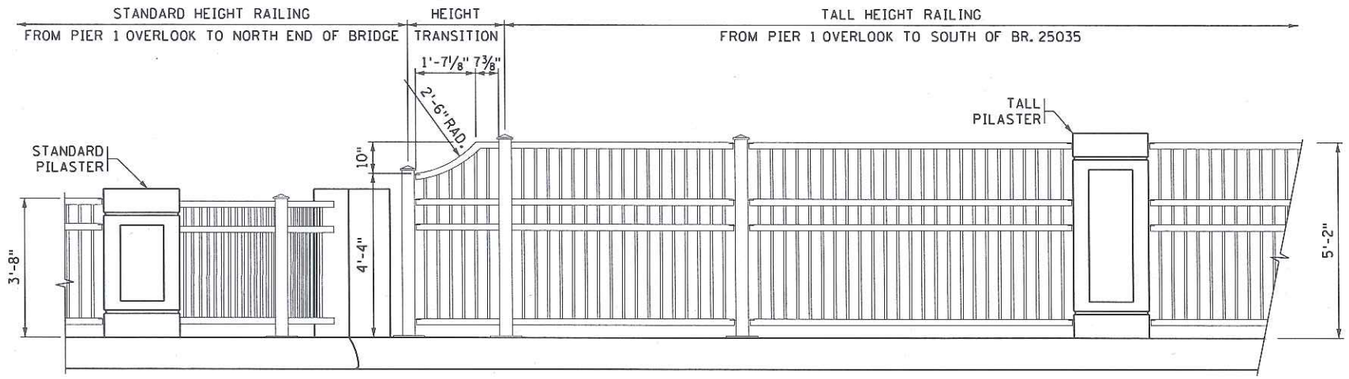

ORNAMENTAL METAL RAILING ELEVATION①

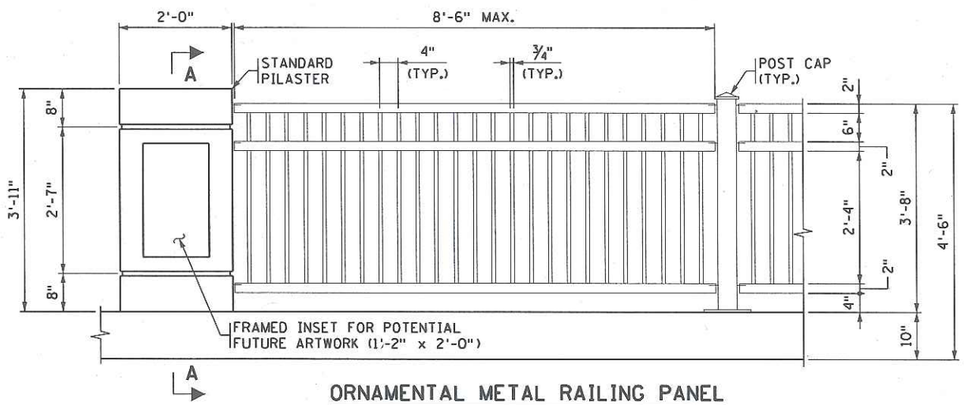

ORNAMENTAL METAL RAILING PANEL

INSIDE VIEW (STANDARD HEIGHT)

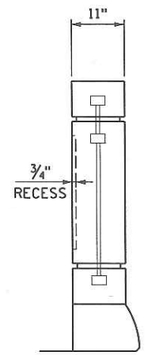

SECTION A-A

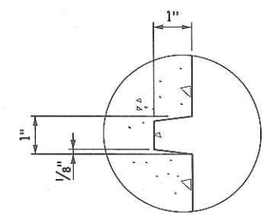

REVEAL DETAIL

TYPICAL ALL PILASTERS

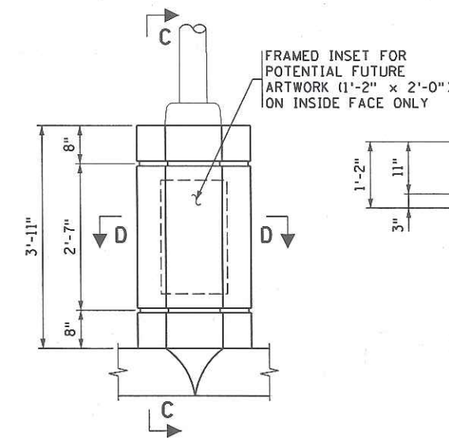

PILASTER WITH LIGHT

OUTSIDE VIEW

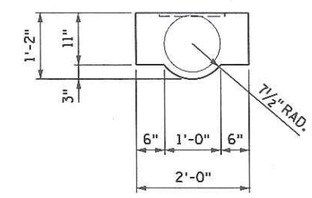

SECTION D-D

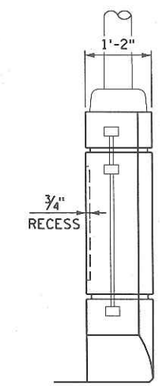

SECTION C-C

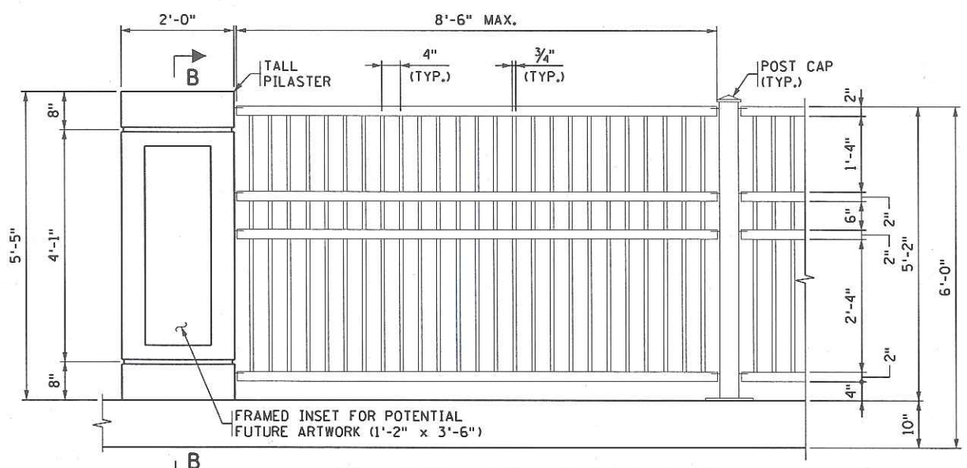

ORNAMENTAL METAL RAILING PANEL

INSIDE VIEW (TALL HEIGHT)

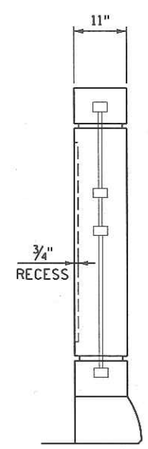

SECTION B-B

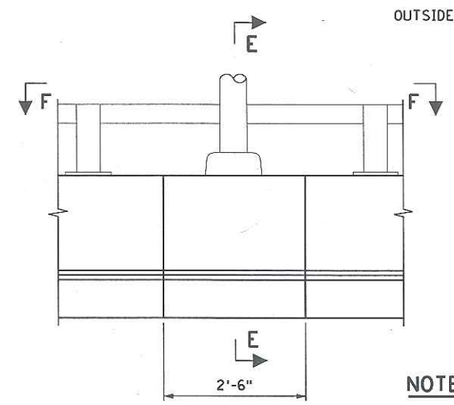

P-2 BARRIER WITH LIGHT

OUTSIDE VIEW

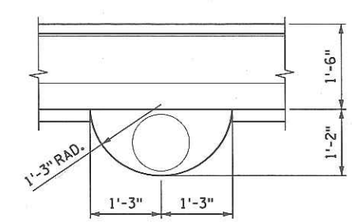

SECTION F-F

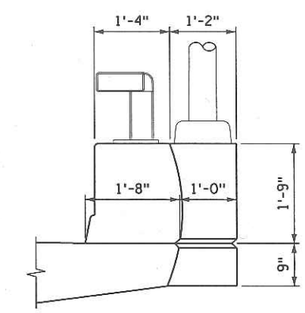

SECTION E-E

NOTES:

FOR ADDITIONAL AESTHETIC DETAILS INCLUDING LOGO, COLORS, TEXTURES AND TREATMENTS SEE THE VISUAL QUALITY MANUAL.

SEE VQM FOR LIGHT STANDARD SPACING REQUIREMENTS. TO BE DEVELOPED DURING FINAL DESIGN. (PILASTERS TO BE LOCATED AT ALL LIGHT STANDARDS AND ON OVERLOOKS AS SHOWN)

① TALL HEIGHT RAILING CONTINUES ON RETAINING WALL. COORDINATE CONNECTION DETAIL AND LOCATION BETWEEN BRIDGE AND ROAD FINAL DESIGN.

REVISION					
NO.	DATE	DESCRIPTION	DR.	CHK.	APP'D.

HDR

TITLE: AESTHETIC DETAILS SHEET 3 OF 7

DES: DJR	DR: DJR	APPROVED:	
CHK: JZB	CHK: JZB		
MINNESOTA PROJECT NO. 2516-25033 WISCONSIN PROJECT NO. 7210-00-06			BRIDGE NO. 25033
SHEET NO. 20 OF 24 SHEETS			

drochai 11:45:25 PM 11/4/2015
c:\pwworking\oma\d1023587\D0000000001177092.tb1
pw:\\PWAPPOMA001\Northcentral.Oma\Documents\007569\0000000001177092\13.00 CAD\Bridge\Plan Shts\Br25033 Over River\5016

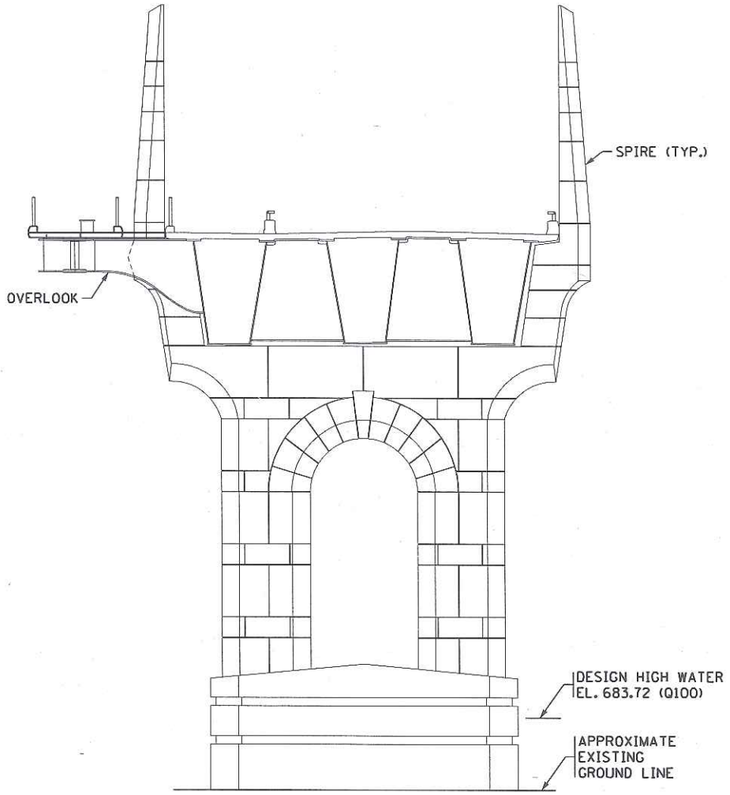

PIER 1

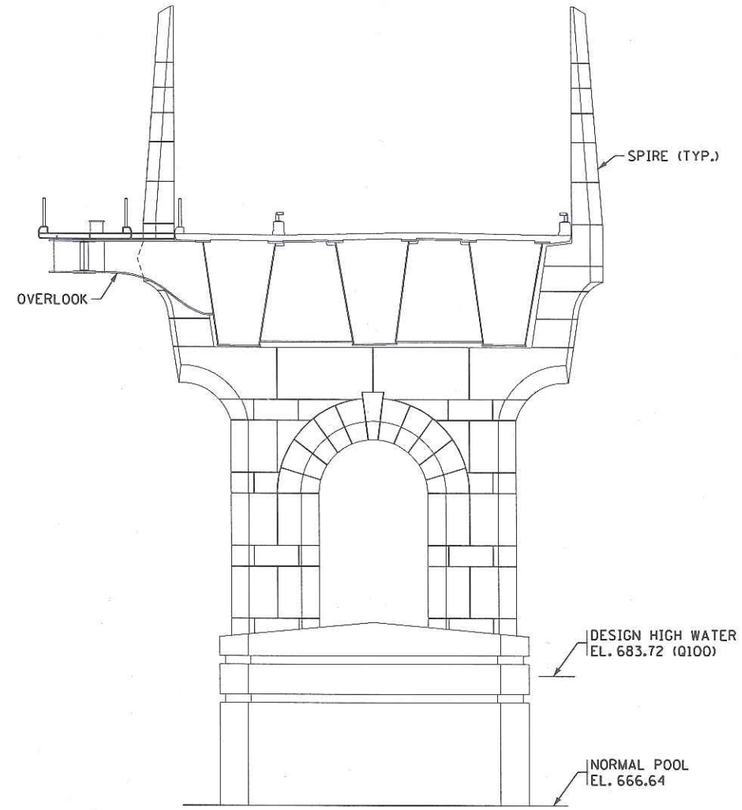

PIER 2

NOTES:

SEE AESTHETIC DETAILS SHEET 5 OF 7 FOR PIER GEOMETRY.

HEIGHT OF PLINTH FOR ALL PIERS TO BE DETERMINED IN FINAL DESIGN.

PER AASHTO, VESSEL COLLISION LOAD IS APPLIED 5' ABOVE DESIGN HIGH WATER. ONLY PIERS 1-3 REQUIRE VESSEL COLLISION PROTECTION (PLINTH). PIERS 4-6 REQUIRE PROTECTION FROM FLOOD DEBRIS ONLY AT SAME 100 YEAR FLOOD STAGE AS DIRECTED BY MNDOT HYDRAULICS UNIT.

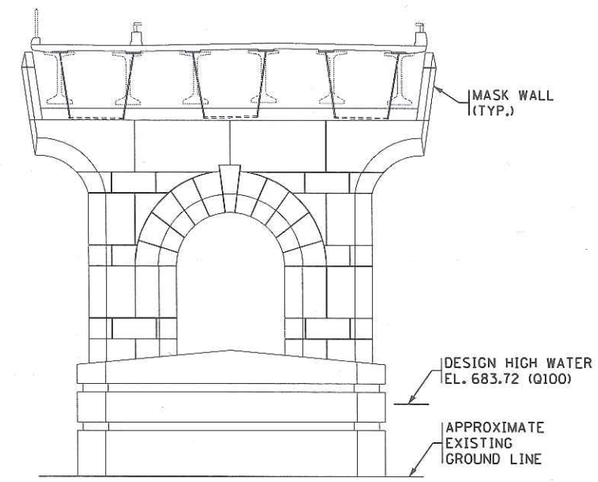

PIER 3

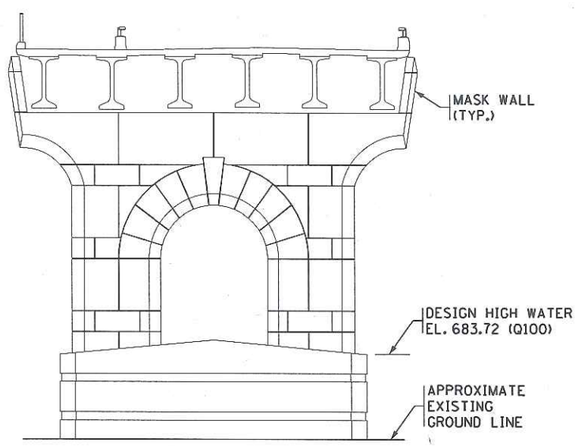

PIER 4

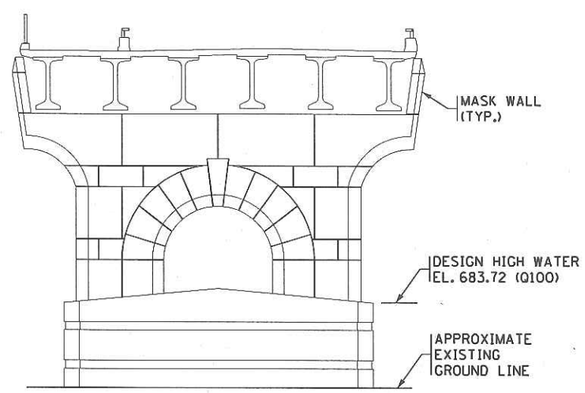

PIER 5

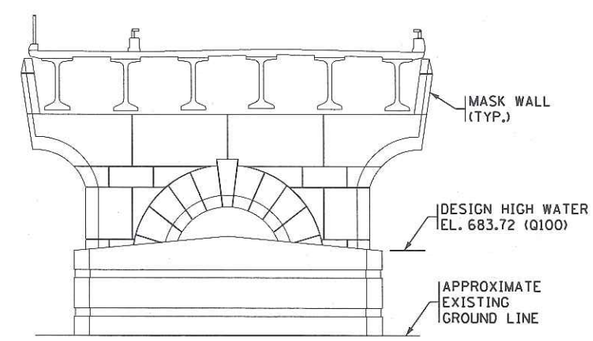

PIER 6

REVISION					
NO.	DATE	DESCRIPTION	DR.	CHK.	APP'D.

HDR

TITLE:

AESTHETIC DETAILS
SHEET 4 OF 7

DES: DJR	DR: DJR	APPROVED:
CHK: JZB	CHK: JZB	

MINNESOTA PROJECT NO. 2516-25033
WISCONSIN PROJECT NO. 7210-00-06

SHEET NO. 21 OF 24 SHEETS

BRIDGE NO.
25033

drachel
11/4/15 4:16 PM
c:\pwworking\omn\d1023587\00000000017092.pb1
pw:\\PWAPPWA001.NorthCentral.Loworg\Documents\007569\00000000017092\13.00_CAD\Bridge\Plan Shts\Br25033 Over River\5017

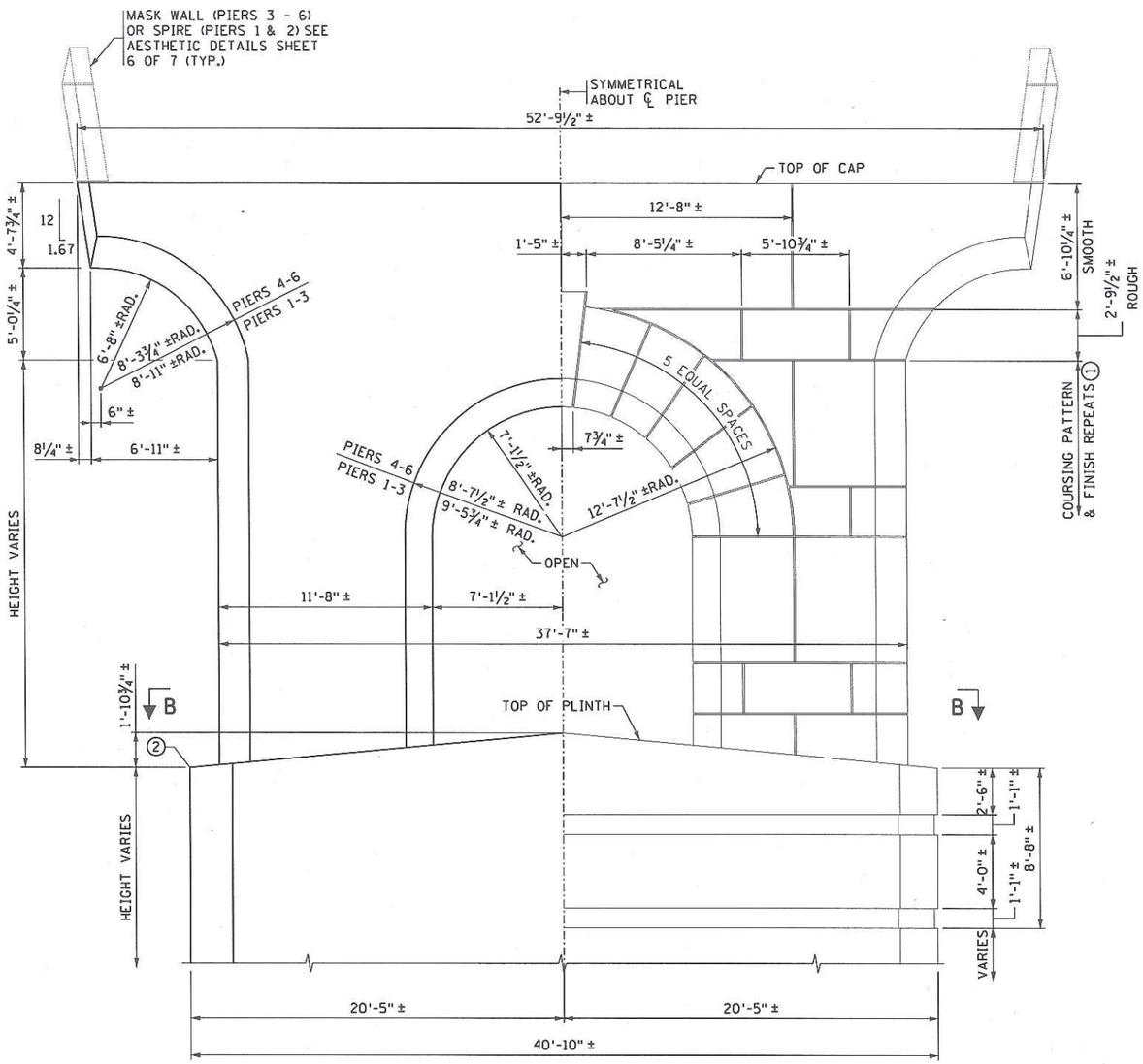

TYPICAL PIER ELEVATION

PIER 4 SHOWN
(OTHERS SIMILAR EXCEPT HEIGHT AND AS NOTED)

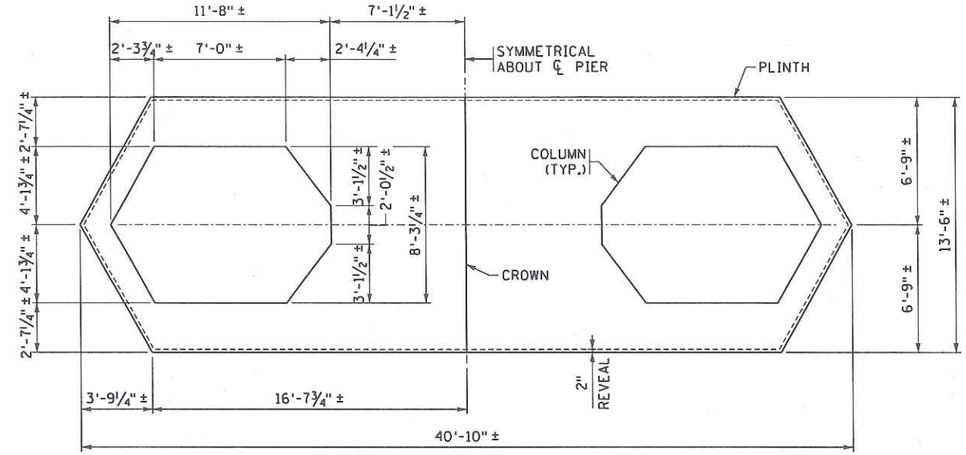

SECTION B-B

PIERS 1-3 ONLY

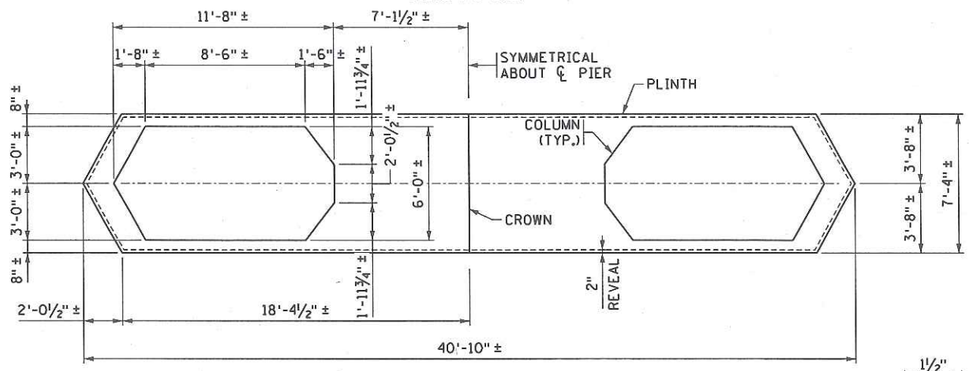

SECTION B-B

PIERS 4-6 ONLY

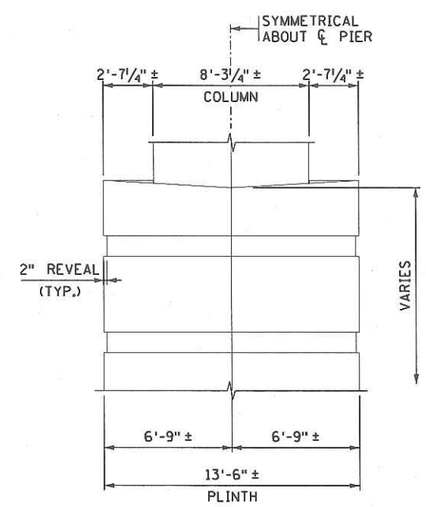

PLINTH END ELEVATION

PIERS 1-3 ONLY

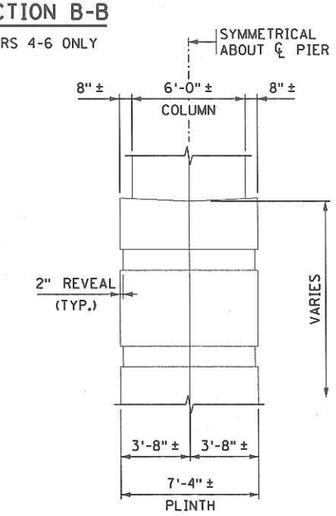

PLINTH END ELEVATION

PIERS 4-6 ONLY

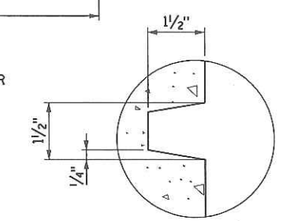

REVEAL DETAIL

TYPICAL FOR PIER

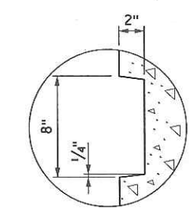

REVEAL DETAIL

TYPICAL FOR PLINTH

NOTES:

DIMENSIONS AND SIZES SHOWN AS A GUIDE ONLY.
ACTUAL DIMENSIONS TO BE SET IN FINAL DESIGN.

SEE VISUAL QUALITY MANUAL FOR SPECIAL SURFACE TREATMENTS AND PAINT COLORS.

① MEASURED TO CENTER OF REVEAL.

② SEE AESTHETIC DETAILS SHEET 4 OF 7 FOR PLINTH HEIGHT INFORMATION.

REVISION

NO.	DATE	DESCRIPTION	DR.	CHK.	APP'D.

HDR

TITLE: AESTHETIC DETAILS SHEET 5 OF 7

DES: DJR | DR: DJR | APPROVED:
CHK: JZB | CHK: JZB

MINNESOTA PROJECT NO. 2516-25033
WISCONSIN PROJECT NO. 7210-00-06

SHEET NO. 22 OF 24 SHEETS

BRIDGE NO. 25033

dr:dahal
11/4/15 PM
11/4/2015
c:\pwworking\omaa\d102587\00000000177092.tb1
pw:\\PWAPPOMA001.NorthCentral.Omaha\Documents\007569\00000000177092\13.00.CAD\Bridge\Plan Shts\Br25033 Over River\5018

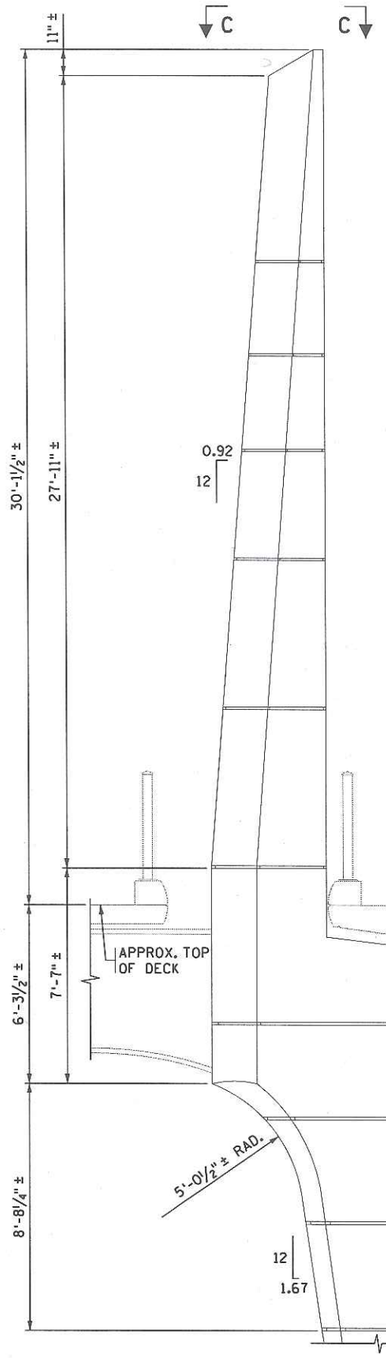

SPIRE FRONT ELEVATION

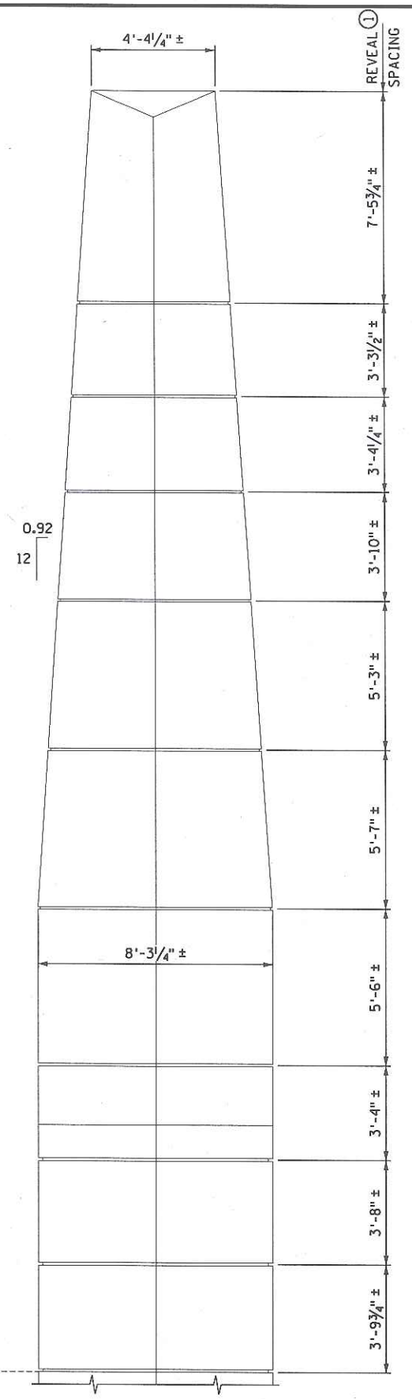

SPIRE END ELEVATION

OVERLOOK AND DECK NOT SHOWN

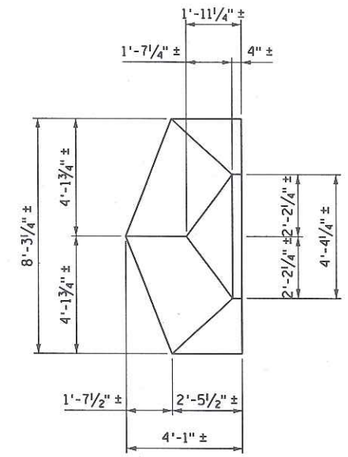

SECTION C-C

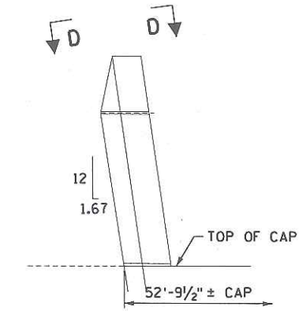

SECTION E-E

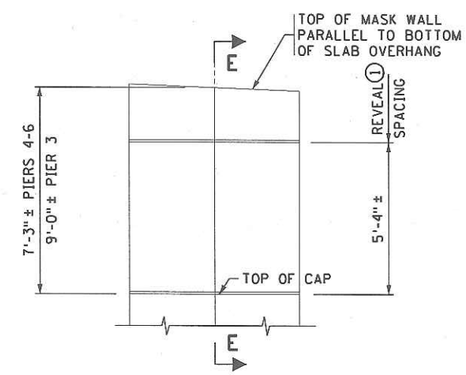

MASK WALL END ELEVATION

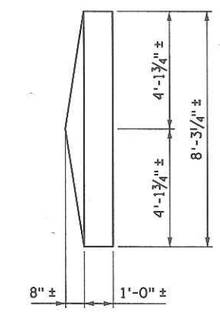

SECTION D-D

PIER 3

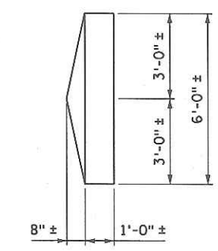

SECTION D-D

PIERS 4-6

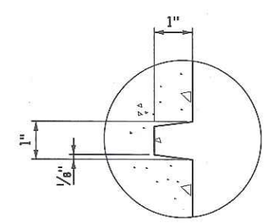

REVEAL DETAIL

TYPICAL SPIRE

NOTES:

DIMENSIONS AND SIZES SHOWN AS A GUIDE ONLY. ACTUAL DIMENSIONS TO BE SET IN FINAL DESIGN.

SEE VISUAL QUALITY MANUAL FOR SPECIAL SURFACE TREATMENTS AND PAINT COLORS.

① MEASURED TO CENTER OF REVEAL.

REVISION					
NO.	DATE	DESCRIPTION	DR.	CHK.	APP'D.

HDR

TITLE: AESTHETIC DETAILS SHEET 6 OF 7

DES: DJR	DR: DJR	APPROVED:
CHK: JZB	CHK: JZB	

MINNESOTA PROJECT NO. 2516-25033
WISCONSIN PROJECT NO. 7210-00-06

SHEET NO. 23 OF 24 SHEETS

BRIDGE NO. 25033

dragnel
11/4/2015 1:45:44 PM
c:\pwworking\oma\d1023587\00000000017092.tbl
pw:\\PWAPPOMA001:NorthCentral.Omaha\Documents\007569\00000000017092\13.00.CAD\Bridge\Plan Shts\Br25033 Over River\5019

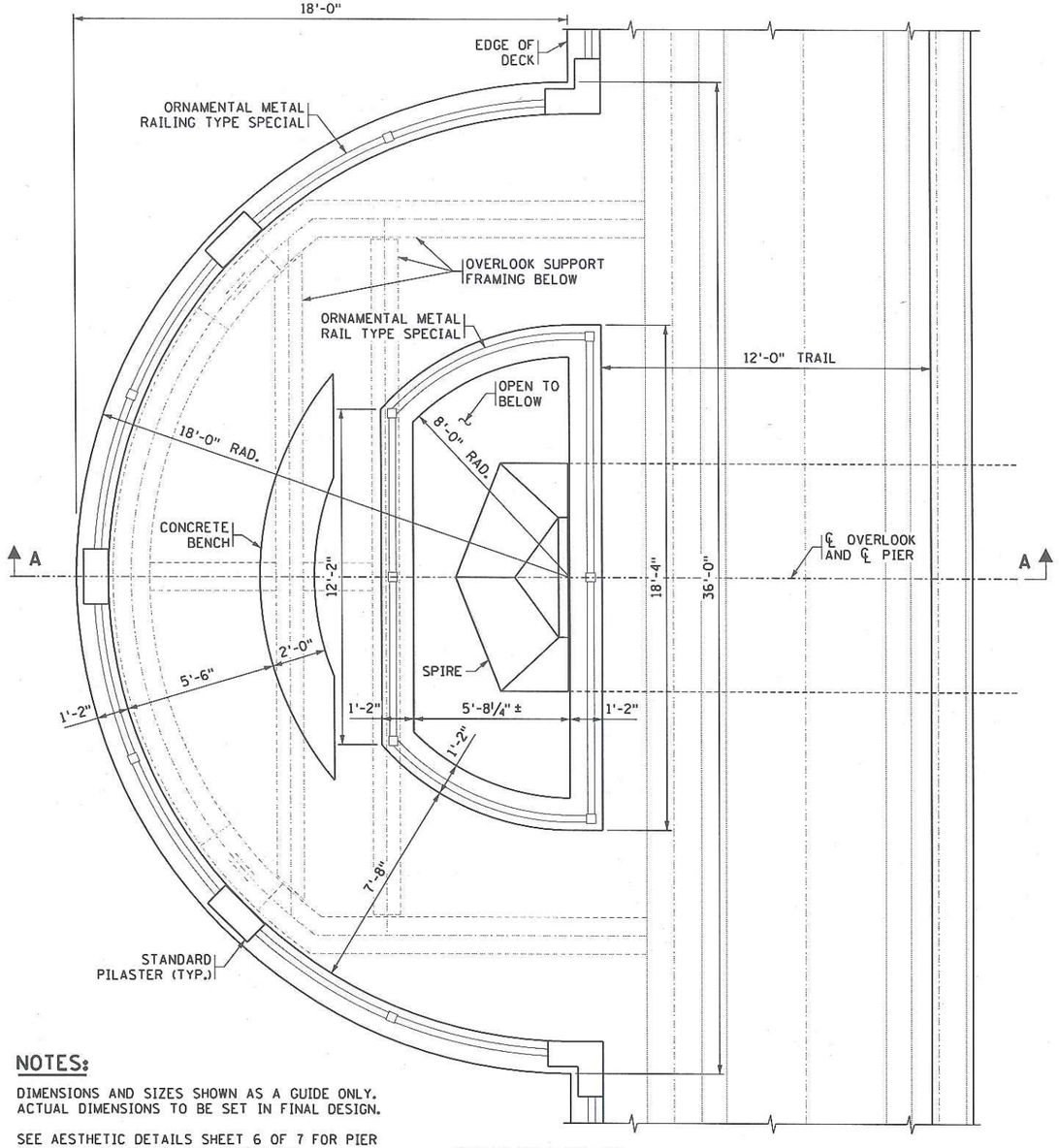

OVERLOOK PLAN

(TYP. PIERS 1 & 2)

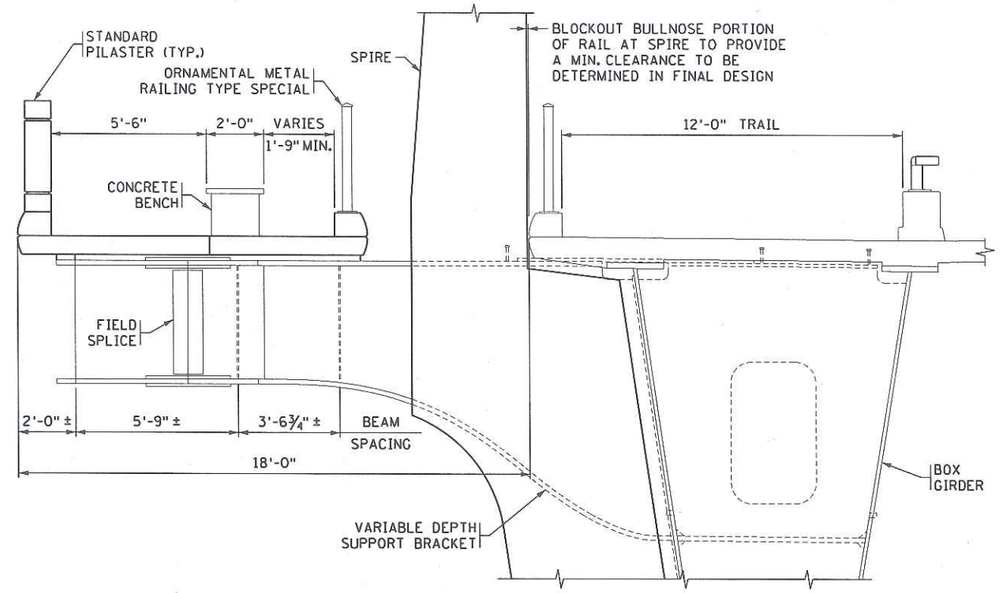

SECTION A-A

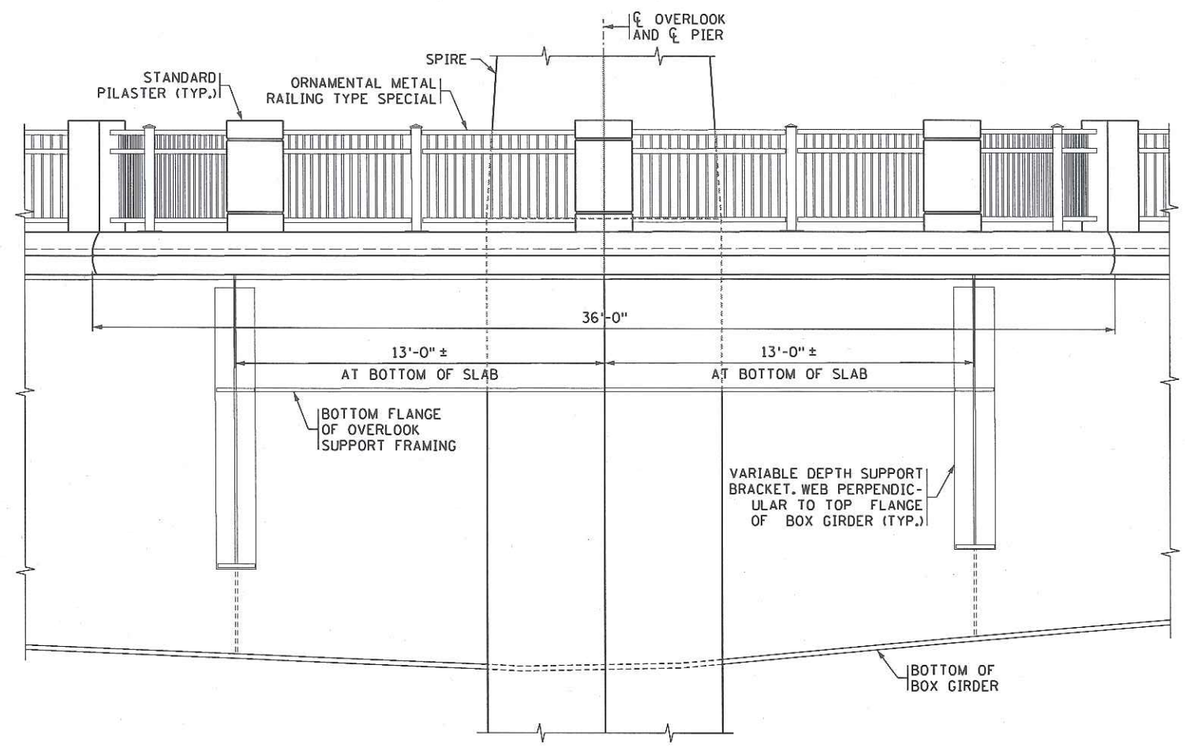

OVERLOOK ELEVATION

(TYP. PIERS 1 & 2)

NOTES:

DIMENSIONS AND SIZES SHOWN AS A GUIDE ONLY. ACTUAL DIMENSIONS TO BE SET IN FINAL DESIGN.

SEE AESTHETIC DETAILS SHEET 6 OF 7 FOR PIER AND SPIRE GEOMETRY AND DIMENSIONS.

SEE AESTHETIC DETAILS SHEETS 2-3 OF 7 FOR DETAILS OF PILASTERS AND ORNAMENTAL METAL RAILING TYPE SPECIAL.

SEE VISUAL QUALITY MANUAL FOR SPECIAL SURFACE TREATMENTS AND PAINT COLORS.

REVISION					
NO.	DATE	DESCRIPTION	DR.	CHK.	APP'D.

HDR

TITLE: AESTHETIC DETAILS SHEET 7 OF 7

DES: DJR | DR: DJR | APPROVED:
CHK: JZB | CHK: JZB

MINNESOTA PROJECT NO. 2516-25033
WISCONSIN PROJECT NO. 7210-00-06

SHEET NO. 24 OF 24 SHEETS

BRIDGE NO. 25033

drachel 11/4/2015 1:46:33 PM
c:\pwworking\omc\d102587\00000000017709 2.rpl
pw:\\PWAPPOMA001:NorthCentral.Omaha\Documents\007569\00000000017709 2\13.00.CAD\Bridge\Plan Shts\Br25033 Over River\5020