SEQ # 727-012015

State of Minnesota
PRICING PAGE -
METHOD # 2
TRACTOR SKID STEERS

Price Quote for:

DISCOUNT OFF BASE UNIT

Vendor Name:	**Titan Machinery Inc**
Contact Person:	**Andy Bethel**
Street Address:	**644 East Beaton Dr.**
P.O. Box:	
City, State, Zip	**West Fargo, ND**
Phone #:	**952-445-5400**
Toll Free #:	**800-795-9274**
Fax #:	**952-445-0365**
Email Address:	andy.bethel@titanmachinery.com

1.0	**MANUFACTURER:**	Case
	Warranty	1yr unlimited hours
		2yr 2000 hours on engine
	Discount to be applied to Price List	
	SR130, SR160 and attachments	30%
	SR175 and attachments	32%
	SV185 and attachments	35%
	SR210, SR220, SR240 and attachments	36%
	SR250, SR270 and attachments	37%
	SV250, SV280, SV300 (tier 4 interm and final) and attachments	41%
	Date & I.D. of Price List	Skid Steer Loader
		Jan. 1, 2015

2.0	**PERFORMANCE/WARRANTY OPTIONS:**	
	Use this section to offer performance/warranty options and include cost.	Price
2.1		
2.2		
2.3		

3.0	**DISCOUNT OFF LIST PRICE FOR RELATED PARTS & ACCESSORIES**	
	See Special Terms and Conditions	%

4.0	**INSTALLATION: HOURLY LABOR RATE FOR ATTACHMENT INSTALLATIONS, ETC.:**	
	(See Special Terms and Conditions)	$ 112.00

5.0	**OEM EXTENDED WARRANTY OPTIONS**	
	(Specify years, miles or hours extended term covers.)	
5.1	SR130, 2 YR, 2,000 Hours Full Machine, $0 deductible	$ 553.00
5.2	SR130, 3 YR, 3,000 Hours Full Machine, $0 deductible	$ 1,343.00
5.3	SR130, 5 YR, 3,000 Hours Full Machine, $0 deductible	$ 2,300.00
5.4	SR160, 2 YR, 2,000 Hours Full Machine, $0 deductible	$ 923.00
5.5	SR160, 3 YR, 3,000 Hours Full Machine, $0 deductible	$ 1,939.00
5.6	SR160, 5 YR, 3,000 Hours Full Machine, $0 deductible	$ 3,451.00
5.7	SR175, SV185, 2 YR, 2,000 Hours Full Machine, $0 deductible	$ 923.00
5.8	SR175, SV185, 3 YR, 3,000 Hours Full Machine, $0 deductible	$ 1,939.00
5.9	SR175, SV185, 5 YR, 3,000 Hours Full Machine, $0 deductible	$ 3,451.00
5.10	SR210, 2 YR, 2,000 Hours Full Machine, $0 deductible	$ 1,212.00
5.11	SR210, 3 YR, 3,000 Hours Full Machine, $0 deductible	$ 2,300.00
5.12	SR210, 5 YR, 3,000 Hours Full Machine, $0 deductible	$ 3,632.00
5.13	SR220, SR240, 2 YR, 2,000 Hours Full Machine, $0 deductible	$ 1,240.00
5.14	SR220, SR240, 3 YR, 3,000 Hours Full Machine, $0 deductible	$ 2,500.00
5.15	SR220, SR240, 5 YR, 3,000 Hours Full Machine, $0 deductible	$ 3,928.00
5.16	SR250, SV250, SV280, 2 YR, 2,000 Hours Full Machine, $0 deductible	$ 1,240.00
5.17	SR250, SV250, SV280, 3 YR, 3,000 Hours Full Machine, $0 deductible	$ 2,500.00
5.18	SR250, SV250, SV280, 5 YR, 3,000 Hours Full Machine, $0 deductible	$ 3,928.00
5.19	SR270, SV300, 2 YR, 2,000 Hours Full Machine, $0 deductible	$ 1,460.00
5.20	SR270, SV300, 3 YR, 3,000 Hours Full Machine, $0 deductible	$ 2,892.00
5.21	SR270, SV300, 5 YR, 3,000 Hours Full Machine, $0 deductible	$ 4,728.00

6.0	**NEW EQUIPMENT RENTAL PROGRAM**	
	If rental programs are available on the new equipment offered, with the option to purchase, list the hourly/weekly/monthly rental rate. Indicate the percent of rental fee paid by the purchaser that will be applied to the purchase price. See Solicitation Special Terms & Conditions.	

SEQ # 727-012015

State of Minnesota
PRICING PAGE -
METHOD # 2
TRACTOR SKID STEERS

Price Quote for:

Summer Rental Rate - April 1 through Sept 30.

SR130	Summer Hourly Rental Rate:	$
	Summer Weekly Rental Rate:	$ 595
	Summer Monthly Rental Rate:	$ 1,600
	Percent (%) of Rental Fee applied to purchase price:	80%
SR160	Summer Hourly Rental Rate:	$
	Summer Weekly Rental Rate:	$ 650
	Summer Monthly Rental Rate:	$ 1,750
	Percent (%) of Rental Fee applied to purchase price:	80%
SR175, SV185	Summer Hourly Rental Rate:	$
	Summer Weekly Rental Rate:	$ 670
	Summer Monthly Rental Rate:	$ 1,800
	Percent (%) of Rental Fee applied to purchase price:	80%
SR210	Summer Hourly Rental Rate:	$
	Summer Weekly Rental Rate:	$ 745
	Summer Monthly Rental Rate:	$ 2,000
	Percent (%) of Rental Fee applied to purchase price:	80%
SR220, SR240	Summer Hourly Rental Rate:	$
	Summer Weekly Rental Rate:	$ 815
	Summer Monthly Rental Rate:	$ 2,200
	Percent (%) of Rental Fee applied to purchase price:	80%
SR250, SR270, SV250, SV280, SV300	Summer Hourly Rental Rate:	$
	Summer Weekly Rental Rate:	$ 855
	Summer Monthly Rental Rate:	$ 2,300
	Percent (%) of Rental Fee applied to purchase price:	80%

Winter Rental Rate - October 1 through March 31

SR130	Winter Hourly Rental Rate:	$
	Winter Weekly Rental Rate:	$ 595
	Winter Monthly Rental Rate:	$ 1,600
	Percent (%) of Rental Fee applied to purchase price:	80%
SR160	Winter Hourly Rental Rate:	$
	Winter Weekly Rental Rate:	$ 650
	Winter Monthly Rental Rate:	$ 1,750
	Percent (%) of Rental Fee applied to purchase price:	80%
SR175, SV185	Winter Hourly Rental Rate:	$
	Winter Weekly Rental Rate:	$ 670
	Winter Monthly Rental Rate:	$ 1,800
	Percent (%) of Rental Fee applied to purchase price:	80%
SR210	Winter Hourly Rental Rate:	$
	Winter Weekly Rental Rate:	$ 745
	Winter Monthly Rental Rate:	$ 2,000
	Percent (%) of Rental Fee applied to purchase price:	80%
SR220, SR240	Winter Hourly Rental Rate:	$
	Winter Weekly Rental Rate:	$ 815
	Winter Monthly Rental Rate:	$ 2,200
	Percent (%) of Rental Fee applied to purchase price:	80%
SR250, SR270, SV250, SV280, SV300	Winter Hourly Rental Rate:	$
	Winter Weekly Rental Rate:	$ 855
	Winter Monthly Rental Rate:	$ 2,300
	Percent (%) of Rental Fee applied to purchase price:	80%

If the new rental equipment is purchased and finance charges are applicable for the actual rental term only, state the actual interest rate here: _____

7.0 VENDOR OWNED RENTAL RETURN OR DEMO EQUIPMENT PROGRAM

See Solicitation Special Terms and Conditions.

DEDUCT cost per **Used Hour** from the original Contract Price $

SR130, SR160	$ 6.00
SR175	$ 7.00
SV185	$ 8.00
SR210	$ 8.00
SR220	$ 9.00

SEQ # 727-012015

State of Minnesota
PRICING PAGE -
METHOD # 2
TRACTOR SKID STEERS

Price Quote for:

SR240, SR250	$	10.00
SV250, SR270, SV280	$	9.00
SV300	$	11.00

8.0 DELIVERY CHARGES - SEE SPECIAL TERMS AND CONDITIONS

DELIVERY STARTING POINT: City/ST/Zip		Nearest Titan Machinery Case CE Location
PRICE PER LOADED MILE	$	4.00
MINIMUM DELIVERY CHARGE (if any)	$	100.00

SEQ # 727-012015

State of Minnesota
PRICING PAGE -
METHOD # 2
TRACTOR SKID STEERS

Price Quote for:

DISCOUNT OFF BASE UNIT

Vendor Name:	**Titan Machinery Inc**
Contact Person:	**Andy Bethel**
Street Address:	**644 East Beaton Dr.**
P.O. Box:	
City, State, Zip	**West Fargo, ND**
Phone #:	**952-445-5400**
Toll Free #:	**800-795-9274**
Fax #:	**952-445-0365**
Email Address:	andy.bethel@titanmachinery.com

1.0	**MANUFACTURER:**	Case
	Warranty	1yr unlimited hours
		2yr 2000 hours on engine
	Discount to be applied to Price List	
	TR270, TR310 and attachments	35%
	TR320, TR340 and attachments	41%
	TV380 Tier 4 Interim, TV380 Tier 4 Final and attachments	42%
	Date & I.D. of Price List	Compact Track Loaders
		Jan. 1, 2015

2.0	**PERFORMANCE/WARRANTY OPTIONS:**	
	Use this section to offer performance/warranty options and include cost.	Price
2.1		
2.2		
2.3		

3.0	**DISCOUNT OFF LIST PRICE FOR RELATED PARTS & ACCESSORIES**	
	See Special Terms and Conditions	%

4.0	**INSTALLATION: HOURLY LABOR RATE FOR ATTACHMENT INSTALLATIONS, ETC.:**	
	(See Special Terms and Conditions)	$ 112.00

5.0	**OEM EXTENDED WARRANTY OPTIONS**	
	(Specify years, miles or hours extended term covers.)	
5.1	TR270, 2 YR, 2,000 Hours Full Machine, $0 deductible	$ 1,893.00
5.2	TR270, 3 YR, 3,000 Hours Full Machine, $0 deductible	$ 3,742.00
5.3	TR270, 5 YR, 3,000 Hours Full Machine, $0 deductible	$ 6,010.00
5.4	TR310, 2 YR, 2,000 Hours Full Machine, $0 deductible	$ 1,969.00
5.5	TR310, 3 YR, 3,000 Hours Full Machine, $0 deductible	$ 3,892.00
5.6	TR310, 5 YR, 3,000 Hours Full Machine, $0 deductible	$ 6,249.00
5.7	TR320, 2 YR, 2,000 Hours Full Machine, $0 deductible	$ 2,350.00
5.8	TR320, 3 YR, 3,000 Hours Full Machine, $0 deductible	$ 4,465.00
5.9	TR320, 5 YR, 3,000 Hours Full Machine, $0 deductible	$ 7,045.00
5.10	TR340, 2 YR, 2,000 Hours Full Machine, $0 deductible	$ 2,539.00
5.11	TR340, 3 YR, 3,000 Hours Full Machine, $0 deductible	$ 4,821.00
5.12	TR340, 5 YR, 3,000 Hours Full Machine, $0 deductible	$ 7,608.00
5.13	TV380, 2 YR, 2,000 Hours Full Machine, $0 deductible	$ 2,539.00
5.14	TV380, 3 YR, 3,000 Hours Full Machine, $0 deductible	$ 4,925.00
5.15	TV380, 5 YR, 3,000 Hours Full Machine, $0 deductible	$ 8,172.00

6.0 NEW EQUIPMENT RENTAL PROGRAM

If rental programs are available on the new equipment offered, with the option to purchase, list the hourly/weekly/monthly rental rate. Indicate the percent of rental fee paid by the purchaser that will be applied to the purchase price. See Solicitation Special Terms & Conditions.

Summer Rental Rate - April 1 through Sept 30.

TR270	Summer Hourly Rental Rate:	$
	Summer Weekly Rental Rate:	$ 1,150
	Summer Monthly Rental Rate:	$ 3,100
	Percent (%) of Rental Fee applied to purchase price:	80%
TR310, TR320, TR340	Summer Hourly Rental Rate:	$
	Summer Weekly Rental Rate:	$ 1,297.00
	Summer Monthly Rental Rate:	$ 3,500.00
	Percent (%) of Rental Fee applied to purchase price:	80%

SEQ # 727-012015

State of Minnesota
PRICING PAGE -
METHOD # 2
TRACTOR SKID STEERS

Price Quote for:

TV380	Summer Hourly Rental Rate:	$	
	Summer Weekly Rental Rate:	$	2,200.00
	Summer Monthly Rental Rate:	$	7,000.00
	Percent (%) of Rental Fee applied to purchase price:		80%

Winter Rental Rate - October 1 through March 31

TR270	Winter Hourly Rental Rate:	$	
	Winter Weekly Rental Rate:	$	1,150
	Winter Monthly Rental Rate:	$	3,100
	Percent (%) of Rental Fee applied to purchase price:		80%
TR310, TR320, TR340	Winter Hourly Rental Rate:	$	
	Winter Weekly Rental Rate:	$	1,297.00
	Winter Monthly Rental Rate:	$	3,500.00
	Percent (%) of Rental Fee applied to purchase price:		80%
TV380	Winter Hourly Rental Rate:	$	
	Winter Weekly Rental Rate:	$	2,200.00
	Winter Monthly Rental Rate:	$	7,000.00
	Percent (%) of Rental Fee applied to purchase price:		80%

If the new rental equipment is purchased and finance charges are applicable for the actual rental term only, state the actual interest rate here: _____

7.0 VENDOR OWNED RENTAL RETURN OR DEMO EQUIPMENT PROGRAM

See Solicitation Special Terms and Conditions.

DEDUCT cost per **Used Hour** from the original Contract Price	$	
TR270	$	13.00
TR310, TR320, TR340	$	16.00
TV380	$	18.00

8.0 DELIVERY CHARGES - SEE SPECIAL TERMS AND CONDITIONS

DELIVERY STARTING POINT: City/ST/Zip	Nearest Titan Machinery Case CE Location	
PRICE PER LOADED MILE	$	4.00
MINIMUM DELIVERY CHARGE (if any)	$	100.00

SEQ # 727-012015

State of Minnesota
PRICING PAGE -
METHOD # 2
TRACTOR SKID STEERS

Price Quote for:

DISCOUNT OFF BASE UNIT

Vendor Name:	**Titan Machinery Inc**
Contact Person:	**Andy Bethel**
Street Address:	**644 East Beaton Dr.**
P.O. Box:	
City, State, Zip	**West Fargo, ND**
Phone #:	**952-445-5400**
Toll Free #:	**800-795-9274**
Fax #:	**952-445-0365**
Email Address:	andy.bethel@titanmachinery.com

1.0	**MANUFACTURER:**	Case
	Warranty	1 yr
	Discount to be applied to Price List Skid Steer Loaders / Compact Track Loaders Attachments	15%
	Date & I.D. of Price List	SSL / CTL Attachments 8/1/2014

2.0	**PERFORMANCE/WARRANTY OPTIONS:**	
	Use this section to offer performance/warranty options and include cost.	Price
2.1		
2.2		
2.3		

3.0	**DISCOUNT OFF LIST PRICE FOR RELATED PARTS & ACCESSORIES**	
	See Special Terms and Conditions	%

4.0	**INSTALLATION: HOURLY LABOR RATE FOR ATTACHMENT INSTALLATIONS, ETC.:**	
	(See Special Terms and Conditions)	$ 112.00

5.0 OEM EXTENDED WARRANTY OPTIONS

Use this section to offer performance/warranty options,
number these items starting with 1.21A, 1.21B, etc.
(Specify years, miles or hours extended term covers.)

Price: $

6.0 NEW EQUIPMENT RENTAL PROGRAM

If rental programs are available on the new equipment offered, with the option to purchase, list the hourly/weekly/monthly rental rate. Indicate the percent of rental fee paid by the purchaser that will be applied to the purchase price. See Solicitation Special Terms & Conditions.

Summer Rental Rate - April 1 through Sept 30.

Summer Hourly Rental Rate:	$
Summer Weekly Rental Rate:	$
Summer Monthly Rental Rate:	$
Percent (%) of Rental Fee applied to purchase price:	%

Winter Rental Rate - October 1 through March 31

Winter Hourly Rental Rate:	$
Winter Weekly Rental Rate:	$
Winter Monthly Rental Rate:	$
Percent (%) of Rental Fee applied to purchase price:	%

If the new rental equipment is purchased and finance charges are applicable for the actual rental term only, state the actual interest rate here: _____

7.0 VENDOR OWNED RENTAL RETURN OR DEMO EQUIPMENT PROGRAM

See Solicitation Special Terms and Conditions.
DEDUCT cost per **Used Hour** from the original Contract Price $

8.0 DELIVERY CHARGES - SEE SPECIAL TERMS AND CONDITIONS

DELIVERY STARTING POINT: City/ST/Zip	Nearest Titan Machinery Case CE Location
PRICE PER LOADED MILE	$ 4.00
MINIMUM DELIVERY CHARGE (if any)	$ 100.00

RESPONDER'S NAME: **Titan Macginery Inc.**

TITLE & NUMBER: SKID STEER AND OEM ATTACHMENTS T-631(5)

**** Following is a list of all distributors that are authorized to sell the equipment listed above.**

**** The Swift Vendor Number (SWIFT UD) must be complete, including the vendor Swift ID and Location Code (LOC CODE).**

**** All distributors MUST provide the required insurance certificates to the State as outline in the Swift Event Special Terms and Conditions before any State Contract may be executed.**

COMPANY NAME	SWIFT ID	LOC CODE	COMPANY ADDRESS	ST /ZIP	PHONE	CONTACT NAME
Titan Machinery Inc	251892	18	6340 County Road 101 E Shakopee	MN / 5537	952-445-5400	John Kreklow
Titan Machinery Inc	251892	6	4001 38th Street SW Fargo	ND / 5810	701-237-3333	Kyle Fuglesten
Titan Machinery Inc	251892	10	500 Ingersoll Ave, Crookston	MN / 5671	218-281-4668	Craig Morgan
Titan Machinery Inc	251892	19	4311 Haines Road, Hermantown	MN / 5581	218-727-3038	Tim Clay
Titan Machinery Inc	251892	17	14375 James Road, Rogers	MN / 5537	763-428-5099	Ben Carlson
Titan Machinery Inc	251892	2	1201 North Hwy 59, Marshall	MN / 5625	507-532-5783	Lucas Hilgeman
Titan Machinery Inc	251892	5	4201 N. Cliff Ave, Sioux Falls	SD / 5710	605-336-3434	Matt Leighton
Titan Machinery Inc	251892	20	N 1626 Wuensch Road, La Crosse	WI / 54601	608-788-1025	Chuck Schams

CASE CONSTRUCTION

SKID STEER LOADERS/ COMPACT TRACK LOADERS

ATTACHMENTS

INDEX

SKID STEER LOADERS/COMPACT TRACK LOADERS

Adapters SS-2
Augers SS-3-5
Auto Rake SS-6
Backhoes SS-7
Backhoe Options & Accessories SS-8-10
Backhoe Specifications SS-11
Bale Handler SS-12
Bale Spears SS-13
Brooms, Angle SS-14
Brooms, Hopper SS-15
Brooms, Pick-Up SS-16
Buckets, 4X1 (Utility) SS-17
Buckets, 4X1 (Construction) SS-18
Buckets, Power Side Discharge SS-19
Chipper SS-20
Cold Planers, High Flow SS-21-22
Cold Planers, Standard Flow SS-23
Cold Planers - Specifications SS-24
Concrete Bucket SS-25
Concrete Claw SS-26
Dozer Blades SS-27
Grader Rakes SS-28
Grapples, Brush Construction SS-29
Grapples, Brush Utility SS-30
Grapple, Log SS-31
Grapple, Scrap Construction SS-32
Grapple, Scrap Utility SS-33
Harley Power Box Rake® SS-34
Hydraulic Hammers SS-35-36
Lift Boom SS-37
Load Monitors SS-38
Manure Fork & Manure Fork w/Grapple SS-39
Manure Scrapers SS-40
Mulchers SS-41
Pallet Forks SS-42-43
Post Driver SS-44
Preparator® Landscape Rake SS-45-46
Rear Stabilizer SS-47
Rock Buckets SS-48
Rock Saws SS-49-50
Root Rake SS-51
Rotary Cutter SS-52
Silage Defacer SS-53
Silt Fence Installers SS-54
Skid Hoe SS-55
Snow Blades (Standard Duty) SS-56
Snow Blades (Heavy Duty) SS-57
Snow Blades, Trip Edge SS-58
Snow Blowers, High Flow SS-59-60
Snow Blowers, Standard Flow SS-61
Snow Buckets SS-62
Snow Push SS-63
Stump Grinders SS-64-65
Three-Point Hitch SS-66
Tillers SS-67
Tilt-Attach SS-68
Tracks, Steel SS-69
Tree Shovel SS-70
Tree Spades SS-71-72
Trenchers SS-73-75
Vibratory Rollers (Padfoot Drum) SS-76
Vibratory Rollers (Smooth Drum) SS-77
Water Kits SS-78
Value Pallet Forks SS-79

Ex Works – Delhi, IA

	PART NUMBER	WEIGHT LB	PRICE
ADAPTER, SSL ATTACHMENT BLANK, Standard Duty	84397477	75	$211.00
ADAPTER, SSL ATTACHMENT BLANK, Heavy Duty	84397478	123	$271.00

MODEL COMPATIBILTY	SR130 SR150 SR160	SR175 SV185	SR200 SR210	SR220		SV250 SR250	SV300		TR270			TR320 TV380
	410	420	430	440	435	445 450	465	420CT		440CT	445CT 450CT	
ADAPTER PLATE - STD	•	•	•									
ADAPTER PLATE - HD	•	•	•	•	•	•	•	•	•	•	•	•

FEATURES

- Std Duty - 1/4" steel construction
- Heavy Duty - 3/8" steel construction with reinforced upper hitch bar.

APPLICATIONS

- Used to adapt special attachments to skid steer coupler

Standard Duty

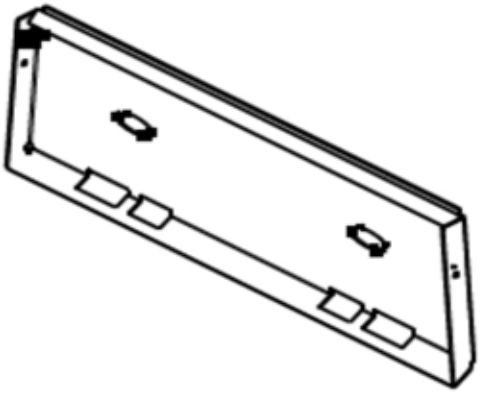

Heavy Duty

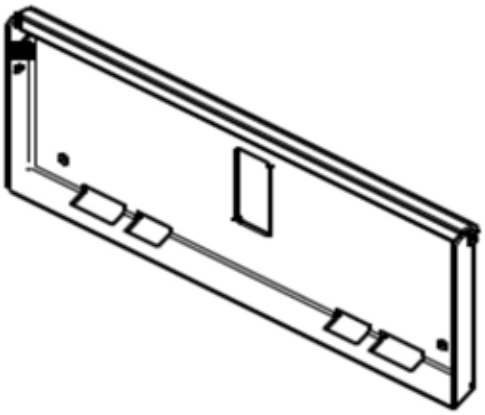

Ex Works – Delhi, IA

Base units include mounting bracket, auger drive head, hoses and QDs. Must order bit for complete unit.

BASE UNIT - PLANETARY DRIVE

STANDARD AUXILIARY BOOM HYDRAULICS REQUIRED; X5075 REQUIRES HIGH FLOW	PART NUMBER	WEIGHT LB	PRICE
X1225R256 DRIVE UNIT, 2-9/16" round output shaft	84390662	365	$2,146.00
X1225H200 DRIVE UNIT, 2" hex output shaft	84390663	365	$2,283.00
X1425R256 DRIVE UNIT, 2-9/16" round output shaft	87488591	365	$2,285.00
X1425H200 DRIVE UNIT, 2" hex output shaft	87488592	365	$2,238.00
X1475R256 DRIVE UNIT, 2-9/16" round output shaft	87042591	405	$2,498.00
X1475H200 DRIVE UNIT, 2" hex output shaft	87042592	405	$2,498.00
X1975R256 DRIVE UNIT, 2-9/16" round output shaft	87042593	410	$2,665.00
X1975H200 DRIVE UNIT, 2" hex output shaft	87042594	410	$2,665.00
X5075H200 DRIVE UNIT, 2" hex output shaft (high flow auxiliary hydraulics and case drain required.	87488593	550	$4,928.00

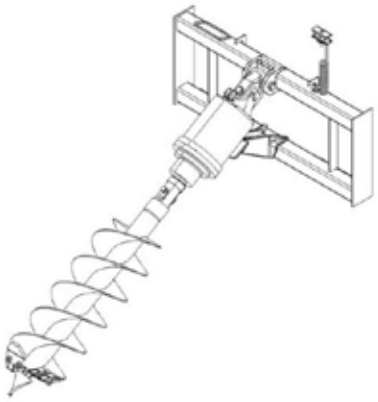

MODEL COMPATIBILTY	SR130 SR150 SR160	410	SR175 SV185 420	SR200 SR210	430 440	SR220	435 445	SV250 SR250	450 465	SV300	420CT	TR270	440CT	445CT 450CT	TR320 TV380	REQ'D EQUIPMENT STD FLOW	HIGH FLOW	CASE DRAIN	FRONT ELEC	DEMO DOOR	2ND AUX
AUGER DRIVE, X1225 (12-18) (NEW)	•															R					
AUGER DRIVE, X1425 (16-22)	•	•	•		•		•		•		•		•	•		R					
AUGER DRIVE, X1475 (10-25)	•	•	•	•	•	•	•	•	•	•	•	•	•	•	•	R					
AUGER DRIVE, X1975 (15-30)		•	•	•	•	•	•	•	•	•	•	•	•	•	•	R					
AUGER DRIVE, X5075 (28-40)			•	•	•	•	•	•	•	•	•	•	•	•	•		R	R			

SPECIFICATIONS					
Auger Model	X1225	X1425	X1475	X1975	X5075
Flow (gpm)	14 -18	18 - 22	10 - 25	15 - 30	28 - 40
RPM @ max flow	92	90	96	100	85
Max Torque @ max flow and pressure (ft-lb)	1799	2253	2377	2769	5069
Gear Reduction	3.8:1	3.8:1	3.8:1	3.8:1	6.1:1
	Planetary Gearbox	Planetary Gearbox	Planetary Gearbox	Planetary Gearbox	Planetary Gearbox
Max auger diameter	24"	30"	30"	36"	36"
Output shaft	2-9/16" Rd	2-9/16" Rd	2-9/16" Rd	2-9/16" Rd	2" Hex
	2" Hex	2" Hex	2" Hex	2" Hex	
Warranty - Gearbox	2 Years	2 Years	5 Years	5 Years	5 Years
Warranty - Other, (non-wear)	1 Year	1 Year	1 Year	1 Year	1 Year

Auger Options (Continued next page)

Ex Works – Delhi, IA

AUGER OPTIONS

HDF STYLE AUGERS 2-9/16" Round Coupler	PART NUMBER	WEIGHT LB	PRICE
6" X 4' Auger	9863606	40	$234.00
9" X 4' Auger	9863607	86	$341.00
12" X 4' Auger	9863608	115	$395.00
15" X 4' Auger	9863609	136	$515.00
18" X 4' Auger	9863610	176	$648.00
24" X 4' Auger	9863611	278	$788.00
30" X 4' Auger	9863612	325	$975.00
36" X 4' Auger	9863613	443	$1,262.00

HDF Style

HDF STYLE AUGERS 2" Hex Coupler	PART NUMBER	WEIGHT LB	PRICE
6" X 4' Auger	9863626	40	$234.00
9" X 4' Auger	9863627	86	$341.00
12" X 4' Auger	9863628	115	$395.00
15" X 4' Auger	9863629	136	$515.00
18" X 4' Auger	9863630	176	$648.00
24" X 4' Auger	9863631	278	$788.00
30" X 4' Auger	9863632	325	$1,056.00
36" X 4' Auger	9863633	443	$1,262.00

HDC Style

HDC STYLE AUGERS 2-9/16" Round Coupler	PART NUMBER	WEIGHT LB	PRICE
6" X 4' Auger	9863614	45	$344.00
9" X 4' Auger	9863615	98	$519.00
12" X 4' Auger	9863616	128	$553.00
15" X 4' Auger	9863617	139	$701.00
18" X 4' Auger	9863618	204	$820.00
24" X 4' Auger	9863619	272	$1,203.00
30" X 4' Auger	9863620	312	$1,486.00
36" X 4' Auger	9863621	430	$1,601.00

HDC STYLE AUGERS 2" Hex Coupler	PART NUMBER	WEIGHT LB	PRICE
6" X 4' Auger	9863634	45	$344.00
9" X 4' Auger	9863635	98	$519.00
12" X 4' Auger	9863636	128	$553.00
15" X 4' Auger	9863637	139	$701.00
18" X 4' Auger	9863638	204	$820.00
24" X 4' Auger	9863639	272	$1,203.00
30" X 4' Auger	9863640	312	$1,486.00
36" X 4' Auger	9863641	430	$1,601.00

Auger extensions and adapters (Continued next page)

Ex Works – Delhi, IA

HTF STYLE AUGERS 2-9/16" Round Coupler	PART NUMBER	WEIGHT LB	PRICE
18" X 4' Auger	9863622	144	$596.00
24" X 4' Auger	9863623	198	$617.00
30" X 4' Auger	9863624	264	$899.00
36" X 4' Auger	9863625	349	$1,067.00

HTF STYLE AUGERS 2" Hex Coupler	PART NUMBER	WEIGHT LB	PRICE
18" X 4' Auger	9863642	144	$596.00
24" X 4' Auger	9863643	198	$617.00
30" X 4' Auger	9863644	264	$899.00
36" X 4' Auger	9863645	349	$1,067.00

HTF Style

AUGER EXTENSIONS AND ADAPTERS	PART NUMBER	WEIGHT LB	PRICE
2" hex female to 2-9/16" round male	9863646	16	$195.00
2-9/16" round female to 2" hex male	9863647	15	$128.00
2" hex female to 2" round male	87042596	10	$205.00
2-9/16" round female to 2" round male	87042597	12	$124.00
12" extension, 2-9/16" round	87042598	21	$127.00
24" extension, 2-9/16" round	87042600	39	$167.00
12" extension, 2" hex	87042601	20	$160.00
24" extension, 2" hex	87042602	32	$185.00
48" extension, 2" hex	84514060	57	$223.00

FEATURES

HDC STYLE AUGERS

For difficult gound conditions, compacted soils, heavy clay, asphalt, frozen ground fracturable rock.

- HD cast boring head
- Hardened, drive-in teeth
- Hardened “fishtail” point
- Heavy duty double flighting
- 4 ft. overall length

HDF STYLE AUGERS

For light to moderate ground conditions.

- Fabricated boring head
- Hardened bolt-on teeth
- Hardened “fishtail” point
- Heavy duty double flighting
- 4 ft. overall length

HTF STYLE AUGERS

For tree and shrub planting, the landscape contractor’s preference is the HTF style auger. The two diameter design digs a smaller diameter hole for fertilizer or mulch mixture underneath the root ball. The larger diameter hole should be sized to provide proper clearance between the side walls of the hole and the root ball. The HTF style auger is the clear choice for tree and shrub planting.

- Fabricated boring head
- Two-diameter design
- Hardened fishtail point
- Heavy duty double flighting
- 4 ft. overall length

Auger Options (Continued next page)

AUTO RAKE

SKID STEER LOADERS/COMPACT TRACK LOADERS

Ex Works – Dexter, MI

Packages include mounting plate, hoses and quick couplers.

STANDARD AUXILIARY BOOM HYDRAULICS REQUIRED	PART NUMBER	WEIGHT LB	PRICE
AUTO RAKE, 66"	279530A1	1092	$10,280.00
AUTO RAKE, 76"	251357A1	1200	$11,174.00

MODEL COMPATIBILTY	SR130 SR150 SR160	SR175 SV185		SR200 SR210	SR220		SV250 SR250	SV300		TR270			TR320 TV380	REQ'D EQUIPMENT					
	410 420		430		440	435	445 450	465	420CT		440CT	445CT 450CT		STD FLOW	HIGH FLOW	CASE DRAIN	FRONT ELEC	DEMO DOOR	2ND AUX
AUTO RAKE, 66"	•	•	•	•	•	•			•	•				R					
AUTO RAKE, 76"		•	•	•	•	•	•	•	•	•	•	•	•	R					

FEATURES

- Grooms and finishes soil for seeding and sodding
- Picks up rocks from 3/4" to 6" in diameter and collects them in the hopper
- Breaks up clods and levels soil
- Easy to dump collected debris, simply raise the loader boom and open the shroud hydraulically

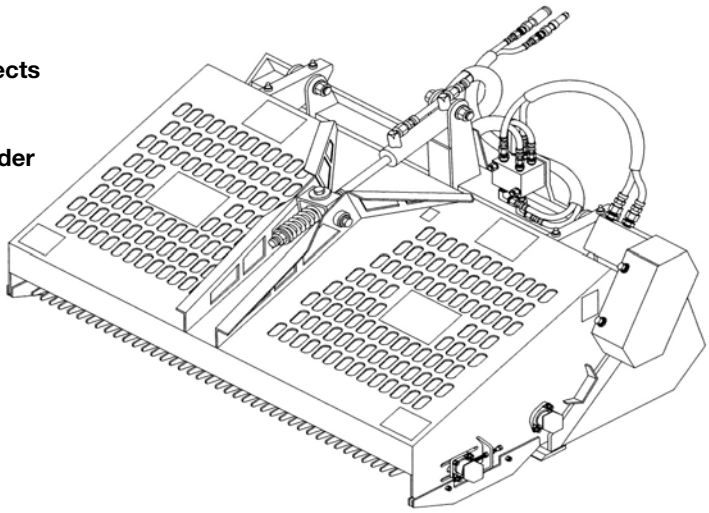

REQUIREMENTS FOR OPERATION

- Standard auxiliary hydraulics
- Rear counterweight on 1800 Series

WORKING WIDTH:	66 in	76 in.
Overall Width	73.8 in.	83.8 in.
Height	40 in.	40 in.
Depth	64 in.	64 in.
Hopper Capacity	13 cu. ft.	15 cu. ft.

Ex Works – Delhi, IA

BASE UNIT (Base units include fold-down stabilizers. Vertical stabilizer may be substituted on 509B, 511B, 611B (extra charge). Must order mounting kit, stabilizer pad option as indicated and bucket for complete unit. Backhoes are not compatible with cab or demolition doors. Doors must be removed for backhoe operation.

AUXILIARY BOOM HYDRAULICS REQUIRED. REAR COUNTERWEIGHTS OR REAR STABILIZERS RECOMMENDED.	PART NUMBER	WEIGHT LB	PRICE
MODEL 485 BACKHOE (fold down stabilizers included with dirt pads only. Bolt-on rubber pads are optional.)	87498441	1010	$8,115.00
Model 509B Backhoe (Must select pad option for fold-down or vertical stabilizers)	47670832	1525	$11,210.00*
Model 511B Backhoe (Must select pad option for fold-down or vertical stabilizers)	47670834	1694	$11,844.00*
Model 611B Backhoe (Must select pad option for fold-down or vertical stabilizers)	47670835	1930	$12,838.00*

MODEL COMPATIBILTY	410	420	430	440	435 445	450 465	420CT	440CT	445CT 450CT	SR130 SR150 SR160	SR175 w/10x16.5	SR175 w/12x16.5	SV185	SR200 SR210 w/10x16.5	SR200 SR210 w/12x16.5 or 33/15.5x16.5	SR220	SR250	SV250 SV300	TR270	TR320 TV380	REQ'D EQUIPMENT STD FLOW	HIGH FLOW	CASE DRAIN	FRONT ELEC	DEMO DOOR	2ND AUX
485 BACKHOE	•	•	•				•			•	•	•	•								R					
509B BACKHOE	•	•	•	•	•	•	•	•	•		•	•	•	•	•	•	•	•	•	•	R					
511B BACKHOE		•	•	•	•	•	•	•	•		•	•	•	•	•	•	•	•	•	•	R					
611B BACKHOE				•	•	•		•	•								•	•		•	R					
COMPLETE MOUNTING KIT (BACKHOE AND LOADER HALVES)																										
MOUNTING KIT - 87318192	•	•	•	•			•	•																		
MOUNTING KIT - 87318193					•	•			•																	
MOUNTING KIT - 84420962										•																
MOUNTING KIT - 84420963											•		•	•												
MOUNTING KIT - 84420965												•			•	•	•	•	•	•						
MOUNTING BRACKETS (LOADER HALF ONLY)																										
MOUNTING BRKT - 87318194	•	•	•	•			•	•																		
MOUNTING BRKT - 87318195					•	•			•																	
MOUNTING BRKT - 84466100										•																
MOUNTING BRKT - 84420966											•		•	•												
MOUNTING BRKT - 84420967												•			•	•	•	•	•	•						

MOUNTING KITS (Must Order One to Complete Unit)

	PART NUMBER	WEIGHT LB	PRICE
Mounting kit for 410, 420, 430, 440, 420CT, 440CT	87318192	223	$1,797.00
Mounting kit for 435, 445, 450, 465, 445CT, 450CT	87318193	205	$1,797.00
Mounting kit for SR130, SR150, SR160	84420962	250	$2,140.00
Mounting kit for SR175, SV185, SR200, SR210 (see table)	84420963	275	$2,347.00
Mounting kit for SR175, SR200, SR210, SR220, SR250, SV250, SV300, TR270, TR320 TV380 (see table)	84420965	270	$2,347.00

Ex Works – Delhi, IA

STABILIZER PAD OPTIONS (Must order one as indicated)

	PART NUMBER	WEIGHT LB	PRICE
Rubber Street Pads for 485 (fold-down) - not required	84150223	10	$145.00
Flat Pads for 509B, 511B (fold-down)	47670838	20	$155.00*
Standard Dirt Pads for 509B, 511B (fold-down)	86547400	30	$697.00
Rubber Street Pads for 509B, 511B (fold-down)	86547423	70	$77.00
Flat Pads for 611B (fold-down)	47670839	55	$207.00*
Standard Dirt Pads for 611B (fold-down)	47670841	46	$183.00*
Rubber Street Pads for 611B (fold-down)	47670842	95	$439.00*
Flip-Over Pads for 509B, 511B, 611B (fold-down)	86547424	100	$226.00

FACTORY INSTALLED VERTICAL STABILIZER OPTIONS (Order as needed. Must order pads)

	PART NUMBER	WEIGHT LB	PRICE
Vertical Stabilizers for 509B, 511B	87034086	90	$824.00
Vertical Stabilizers for 611B	47670844	90	$917.00*
Standard Dirt Pads for all models (vertical)	86590026	32	$201.00
Rubber Street Pads for all models (vertical)	86590027	70	$408.00
Flat Pads for all models (vertical)	86590028	32	$226.00

FACTORY-INSTALLED OPTIONS (Order as Needed)

	PART NUMBER	WEIGHT LB	PRICE
C&P Bucket Quick Coupler for 509B, 511B, 611B	84150409	63	$824.00
Rigid Thumb for 485	87487657	70	$1,495.00
Rigid Thumb for 509B, 511B, 611B	87034089	150	$1,165.00
Hydraulic Thumb for 509B, 511B, 611B	87034090	150	$1,075.00
Hammer Hydraulic Kit for 509B, 511B	47687596	27	$3,538.00*
Hammer Hydraulic Kit for 611B	47687597	27	$3,538.00*
2-Way Aux. Hydraulic Kit for 509B, 511B for hydraulic thumb, hammer and auger applications)	47670854	60	$1,549.00*
2-Way Aux. Hydraulic Kit for 611B (for hydraulic thumb, hammer and auger applications)	47670855	60	$1,549.00*

STANDARD PIN-ON BUCKET OPTIONS FOR 485 BACKHOE (Must order bucket for complete unit)

	PART NUMBER	WEIGHT LB	PRICE
10" Bucket (.9 ft^3)	86547428	72	$480.00
12" Bucket (1.2 ft^3)	86547429	76	$500.00
16" Bucket (1.9 ft^3)	86547430	89	$532.00
18" Bucket (2.1 ft^3)	86547431	95	$555.00
24" Bucket (3.1 ft^3)	86547432	115	$601.00

Backhoe Options & Accessories (Continued next page)

Ex Works – Delhi, IA

STANDARD PIN-ON BUCKET OPTIONS FOR 509B, 511B AND 611B BACKHOES (Must order bucket for compete unit.)

	PART NUMBER	WEIGHT LB	PRICE
12” Bucket (1.5 ft³)*	84150228	125	$929.00
16” Bucket (2.2 ft³)*	84150229	148	$966.00
18” Bucket (2.5 ft³)	84150230	156	$979.00
20” Bucket (2.9 ft³)	47670859	164	$946.00*
24” Bucket (3.6 ft³)	84150231	180	$1,015.00
34” Bucket (5.3 ft³)	84150232	238	$1,271.00
36” Bucket (5.7 ft³)*	84150233	246	$1,219.00
38” Bucket (6.0 ft³)	84150234	255	$1,075.00
Auger Adapter Bracket - Allows Case auger drives to pin onto the dipper. Auger operation requires 2-way aux. hydraulic kit.)	87648164	70	$398.00
Hammer Adapter Bracket - Allows Case hammers to pin onto the dipper. Hammer operation requires hammer valve kit or 2-way aux. hydraulic kit.	47670861	52	$491.00*

* Thumb contacts bucket teeth, others mesh with teeth

C&P MOUNT BUCKET OPTIONS FOR 509B, 511B AND 611B BACKHOES (Requires C&P bucket quick coupler.)

	PART NUMBER	WEIGHT LB	PRICE
12" C&P 027 Heavy Duty bucket (2.4 ft³)*	87034110	175	$748.00
18" C&P 027 Heavy Duty bucket (3.5 ft³)	87034112	210	$957.00
24" C&P 027 Heavy Duty bucket (4.8 ft³)*	87034115	250	$1,073.00
30" C&P 027 Heavy Duty bucket (6.1 ft³)	87034116	275	$1,188.00
36" C&P 027 Heavy Duty bucket (7.5 ft³)	87034117	300	$1,328.00
30" C&P 027 Ditch Cleaning bucket (6.1 ft³)	87034118	250	$1,097.00
36" C&P 027 Ditch Cleaning bucket (7.5 ft³)	87034119	275	$1,214.00
C&P 027 Ripper Tooth	87034120	150	$459.00
C&P 027 Auger adapter (allows Case auger to be attached to dipper. Requires auxiliary hydraulic kit)	87034122	115	$693.00

* Thumb contacts bucket teeth, others mesh with teeth

FIELD INSTALLED OPTIONS (Order as Needed)

	PART NUMBER	WEIGHT LB	PRICE
Mounting bracket for 410, 420, 430, 440, 420CT, 440CT (Loader side only)	87318194	63	$269.00
Mounting bracket for 435, 445, 450, 465, 445CT, 450CT (Loader side only)	87318195	40	$224.00
Mounting bracket for SR130, SR150, SR160 (Loader side only)	84466100	51	$378.00
Mounting bracket for SR175, SV185, SR200, SR210 (see table) (Loader side only)	84420966	43	$360.00
Mounting bracket for SR175, SR200, SR210, SR220, SR250, SV250, SV300, TR270, TR320 TV380 (see table) (Loader side only)	84420967	40	$375.00
Stabilizer Cylinder Guard Kit – 509B, 511B, 611B (fold-down)	47670869	15	$193.00*
C&P Bucket Quick Coupler for 509B, 511B, 611B	84150410	75	$1,250.00
Rigid Thumb for 485	87487658	90	$566.00
Rigid Thumb for 509B, 511B, 611B	87034125	155	$1,138.00
Hydraulic Thumb for 509B, 511B, 611B	87034127	124	$1,375.00
Hammer Hydraulic Kit for 509B, 511B	47670874	27	$3,278.00*
Hammer Hydraulic Kit for 611B	47670875	27	$3,278.00*

Backhoe Options & Accessories (Continued next page)

Ex Works – Delhi, IA

FIELD INSTALLED OPTIONS (Order as Needed) - continued

	PART NUMBER	WEIGHT LB	PRICE
2-Way Aux. Hydraulic Kit for 509B, 511B (for hydraulic thumb, hammer and auger applications)	47670876	60	$1,472.00*
2-Way Aux. Hydraulic Kit for 611B (for hydraulic thumb, hammer and auger applications)	47670877	60	$1,560.00*
Field-installed Vertical Stabilizers for 509B, 511B	87034129	230	$1,813.00
Field-installed Vertical Stabilizers for 611B	47670853	230	$2,018.00*

FEATURES

- 611B - Best in class digging force. Best in class reach.
- All models thumb-ready
- Dual swing cylinders for maximum power.
- Cushioned swing with speed control.
- Optional thumbs
- Optional aux. hydraulic kits for thumb, hammer and auger operation (509B, 511B, 611B).
- Fold-down or vertical stabilizer options.
- Standard pin-on or C&P quick mount buckets (509B, 511B, 611B)

REQUIREMENTS FOR OPERATION

- Standard auxiliary hydraulics

APPLICATIONS:

- Light construction, landscaping, golf courses, nurseries, cemeteries
- Dig trenches for footers and utilities

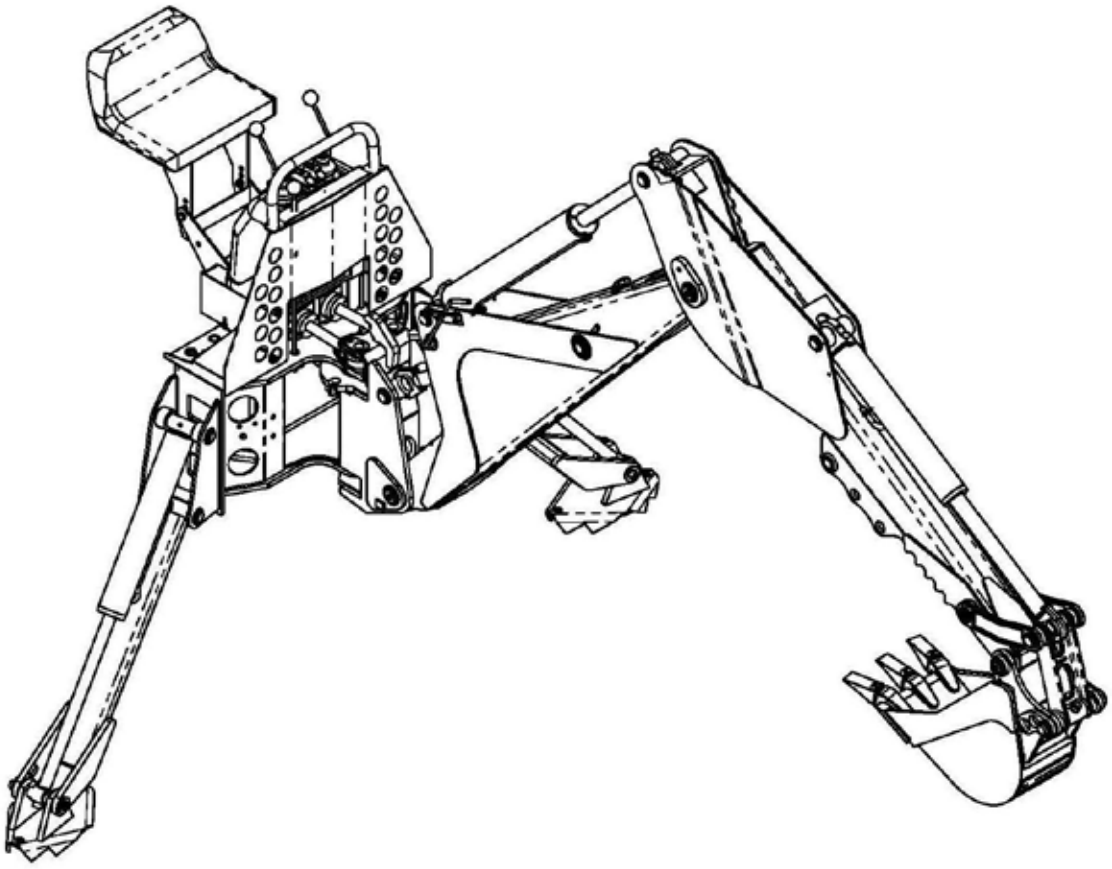

BACKHOE SPECIFICATIONS

SKID STEER LOADERS/COMPACT TRACK LOADERS

Ex Works – Delhi, IA

BACKHOE MODEL		485	509B	511B	611B
TRANSPORT					
A.	Transport Height (w/boom fully retracted)	6' 9"	7' 9"	8' 10"	8' 10"
	Transport Width (w/fold down stabilizers up)	4' 3"	5' 0"	5' 0"	4' 9"
	Transport Width (w/vertical stabilizers)	N/A	4' 9"	4' 9"	5' 10"
B.	Ground Clearance	10"	11"	11"	11"
C.	Overall Length	6' 11"	7' 7"	7' 9"	7' 9"
	Boom Pivot Height	12"	16"	16"	16"
OPERATIONAL					
D.	Digging Depth Maximum	8' 3"	9' 8"	11' 1"	11' 1"
E.	Digging Depth (2') Flat Bottom	8' 2"	9' 7"	11' 0"	11' 0"
F.	Digging Depth (8') Flat Bottom	4' 4"	8' 3"	9' 11"	9' 11"
G.	Overall Operating Height - Fully Raised	10' 1"	12' 10"	14' 5"	14' 5"
H.	Loading Height	5' 3"	6' 10"	8' 0"	8' 0"
J.	Loading Reach	4' 10"	4' 2"	5' 0"	5' 0"
K.	Reach from Swing Post	10' 7"	12' 9"	14' 5"	14' 5"
L.	Bucket Rotation	180°	180°	180°	180°
	Swing Arc	180°	180°	180°	180°
M.	Straight Wall Dig Depth	4' 8"	7' 3"	8' 2"	8' 2"
	Stabilizer Spread-Operating Pos. (fold down)	7' 6"	7' 11"	7' 11"	9' 11"
	Stabilizer Spread-Operating Pos. (vertical)	N/A	4' 9"	4' 9"	5' 10"
	Stabilizer Down Below Grade (fold down)	10"	16"	16"	17"
	Stabilizer Down Below Grade (vertical)	N/A	11"	11"	12"
	System Relief Valve Setting	2,750 psi	2,500 psi	2,500 psi	2,750 psi
	Digging Force - Bucket Cylinder	3,895 lbs.	5,676 lbs.	5,676 lbs.	6,200 lbs.
	Digging Force - Dipper Cylinder	2,358 lbs.	2,754 lbs.	3,056 lbs.	4,350 lbs.

Some dimensions may vary depending on loader model, tire options, etc.

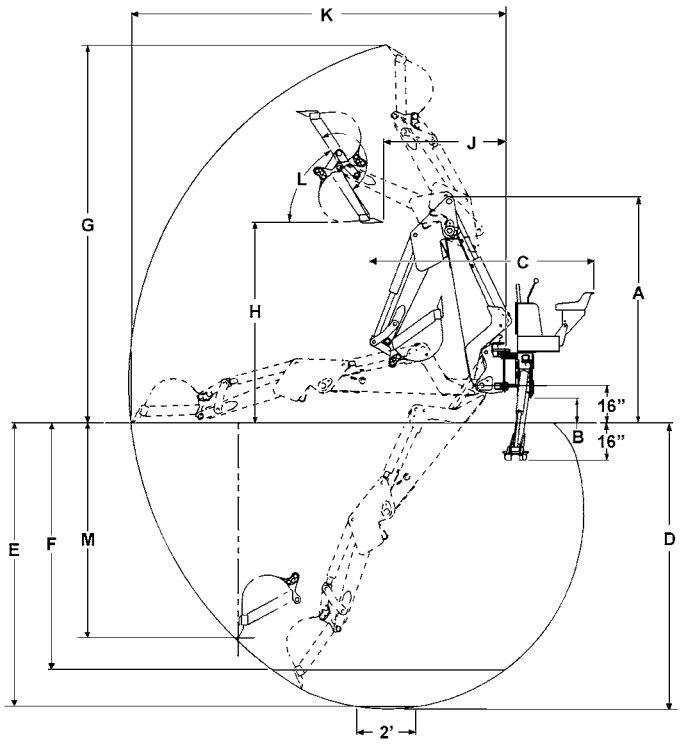

BALE HANDLER

SKID STEER LOADERS/COMPACT TRACK LOADERS

Ex Works – Delhi, IA

Bale handler includes mounting bracket, cylinder, hoses and quick couplers.

STANDARD AUXILIARY BOOM HYDRAULICS REQUIRED	PART NUMBER	WEIGHT LB	PRICE
BALE HANDLER	87381816	590	$2,825.00

MODEL COMPATIBILTY	SR130 SR150 SR160	SR175 SV185	SR200 SR210	SR220		SV250 SR250	SV300		TR270			TR320 TV380	REQ'D EQUIPMENT					
	410	420	430	440	435	445 450	465	420CT		440CT	445CT 450CT		STD FLOW	HIGH FLOW	CASE DRAIN	FRONT ELEC	DEMO DOOR	2ND AUX
BALE HANDLER	•	•	•	•	•	•	•	•	•	•	•	•	R					

FEATURES

- Handles bales from 28" to 80"
- Constant pressure eliminates dropped bales
- Hugger arms fabricated with formed round tubing that protects bale wrap protects bale wrap
- Lifts, moves, stacks round or rectangular bales

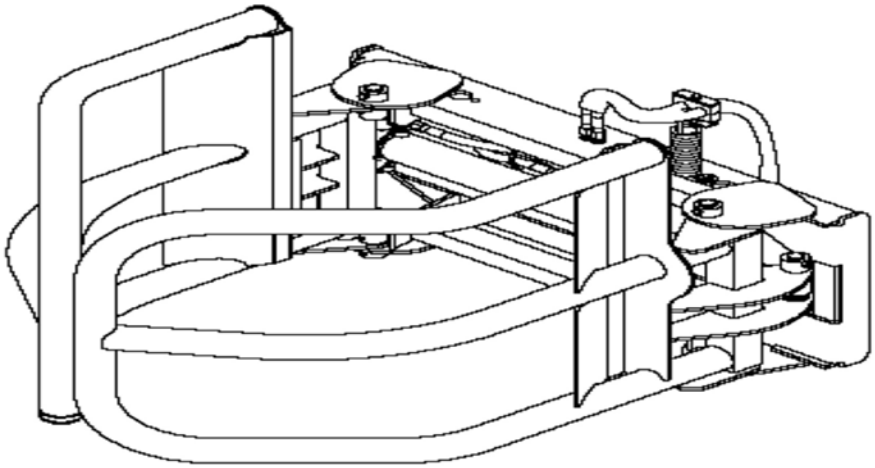

BALE SPEARS

SKID STEER LOADERS/COMPACT TRACK LOADERS

Ex Works – Delhi, IA

	PART NUMBER	WEIGHT LB	PRICE
BALE SPEAR, Std Single	87648168	160	$503.00
BALE SPEAR, HD Single	87473627	195	$703.00
BALE SPEAR, HD Dual	87473628	235	$855.00
BALE SPEAR, 3 x 27"	87473629	210	$840.00
BALE SPEAR, 3 X 44"	87473630	230	$978.00

MODEL COMPATIBILTY	SR130 SR150 SR160	SR175 SV185	SR200 SR210	SR220		SV250 SR250	SV300		TR270			TR320 TV380	REQ'D EQUIPMENT					
	410	420	430	440	435	445 450	465	420CT		440CT	445CT 450CT		STD FLOW	HIGH FLOW	CASE DRAIN	FRONT ELEC	DEMO DOOR	2ND AUX
BALE SPEAR, Std Single	•	•	•	•	•	•	•	•	•	•	•	•						
BALE SPEAR, HD Single	•	•	•	•	•	•	•	•	•	•	•	•						
BALE SPEAR, HD Dual	•	•	•	•	•	•	•	•	•	•	•	•						
BALE SPEAR, 3 X 27"	•	•	•	•	•	•	•	•	•	•	•	•						
BALE SPEAR, 3 X 44"	•	•	•	•	•	•	•	•	•	•	•	•						

SINGLE TINE BALE SPEAR

Standard Duty

- For bales up to 2000 lb @ 24" load center
- Main spear – single tapered, forged, 1-1/4" dia x 44"
- Stabilizer spikes – dual 1-1/4" dia x 19"

Heavy Duty

- For bales up to 3000 lb @ 24" load center
- Main spear – single tapered, forged, 2-1/8" dia x 49"
- Stabilizer spikes – dual 1-1/4" dia x 19"

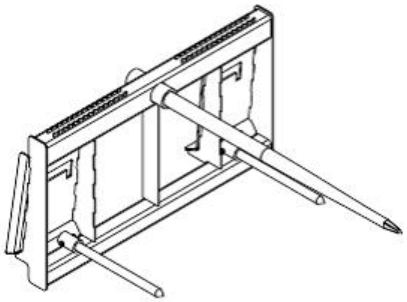

DUAL TINE BALE SPEAR

- For bales up to 4000 lb @ 24" load center
- Main spears – dual tapered, forged, 2-1/8" dia x 49"
- Stabilizer spike – single 1-1/4" dia x 19"

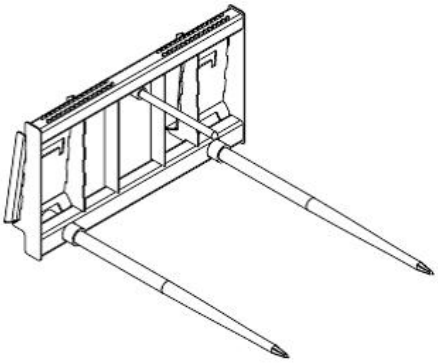

3 TINE BALE SPEAR

- For bales up to 4000 lb @ 24" load center
- Main spikes – 3 tapered, forged, 1-3/4" dia
- Available with 27" or 44" length spears

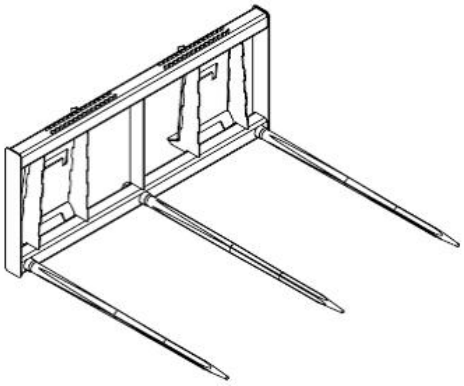

BROOMS, ANGLE

SKID STEER LOADERS/COMPACT TRACK LOADERS

Ex Works – Dexter, MI

Manual angle is standard. Hydraulic angling kits must be specified separately. Units are shipped with mounting bracket, hoses, quick disconnects and parking stands to support brush head when dismounted.

STANDARD AUXILIARY BOOM HYDRAULICS REQUIRED	PART NUMBER	WEIGHT LB	PRICE
72" ANGLE BROOM with poly/wire combination brush	84215694	780	$5,890.00
84" ANGLE BROOM with poly/wire combination brush	84215695	853	$6,088.00
96" ANGLE BROOM with poly/wire combination brush	84215696	870	$6,287.00
96" ANGLE BROOM DUAL MOTOR with poly/wire combination brush	47358395	1174	$7,172.00

OPTIONS (Order as Needed)

Hydraulic Angle Kit (Universal) includes: diverter valve, cylinder, hoses, wiring and switch box mounted in cab.	84215697	20	$1,656.00
Hydraulic Angle Kit (14 - Pin) includes: diverter valve, cylinder, hoses, wiring for loaders equipped with 14-pin boom connector.	84215698	20	$1,534.00
Hydraulic Angle Kit (2nd Aux) includes cylinder, hoses, and quick disconnects for loaders equipped with 2nd auxiliary function.	84215699	18	$507.00
Wire Harness Adapter for 85XT, 90XT, 95XT (use with 84215698). Adapts pre- 9/1/2001 units with 8 - pin boom connector.	87383458	2	$124.00

REPLACEMENT BRUSH SETS

PolyWire Brush Set for 72" broom	84376838	140	$433.00
PolyWire Brush Set for 84" broom	84376839	164	$508.00
PolyWire Brush Set for 96" broom	84376840	196	$582.00

MODEL COMPATIBILTY	SR130 SR150 SR160	410	SR175 SV185	420	430	SR200 SR210 SR220	435	SV250 SR250	445 450	SV300	465	420CT	TR270	440CT	445CT 450CT	TR320 TV380	REQ'D EQUIPMENT					
																	STD FLOW	HIGH FLOW	CASE DRAIN	FRONT ELEC	DEMO DOOR	2ND AUX
72" ANGLE BROOM	•	•	•	•	•	•			•	•						R			O		O
84" ANGLE BROOM		•	•	•	•	•	•	•	•	•	•		•	R			O		O
96" ANGLE BROOM				•	•	•	•	•		•	•	•	•	R			O		O
96" ANGLE BROOM (DUAL)					•	•	•	•		•	•	•	•	R			O		O

FEATURES

- Standard manual angle, optional hydraulic angle
- Parking stands
- Angles 30° left or right
- 32" brush diameter
- Integral nozzle mounting for water application
- Bolt together hood for simple, less costly replacement, if damaged
- 50/50 poly/wire brush core
- Quick change brush without breaking hydraulic lines

APPLICATIONS

- Street cleaning & parking lot maintenance, road maintenance
  clean-up, bridge deck clean-up, jobsite clean-up
- Snow removal

REQUIREMENTS FOR OPERATION

- Standard auxiliary hydraulics

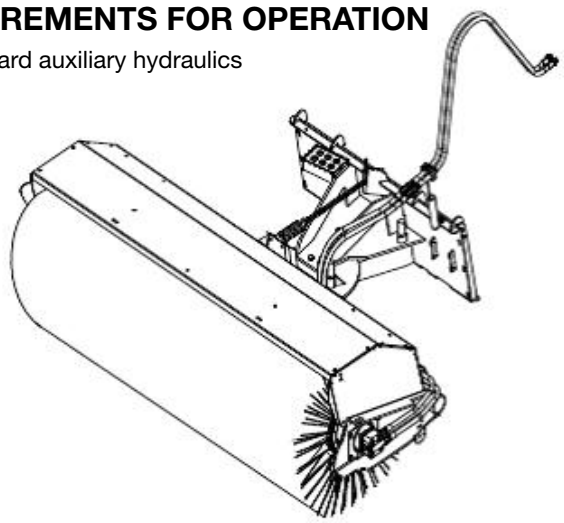

BROOMS, HOPPER

SKID STEER LOADERS/COMPACT TRACK LOADERS

Ex Works – Dexter, MI

BASE UNITS include mounting bracket, hoses and quick disconnects

STANDARD AUXILIARY BOOM HYDRAULICS REQUIRED	PART NUMBER	WEIGHT LB	PRICE
60" SB HOPPER BROOM with poly/wire brush	84188884	808	$4,552.00
72" SB HOPPER BROOM with poly/wire brush	84188885	916	$4,948.00
84" SB HOPPER BROOM with poly/wire brush	84188886	1033	$5,346.00

OPTIONS (Order as Needed)

Gutter brush for SB Hopper Broom - poly only (order 2 for dual)	84188890	95	$1,394.00
Dust control kit, broom mount, (includes 25 gallon tank, nozzles and hose)	445999A1	50	$1,498.00

Loader-mounted water kits available separately. See "Water Kit" page for details.

REPLACEMENT BRUSH SETS

Poly/wire brush set for 60" broom	84375436	97	$416.00
Poly/wire brush set for 72" broom	84375437	113	$487.00
Poly/wire brush set for 84" broom	84375438	134	$582.00

REPLACEMENT BOLT-ON EDGES

Bolt-on edge for 60" broom	47559995	36	$146.00
Bolt-on edge for 72" broom	47559997	42	$161.00
Bolt-on edge for 84" broom	47559999	48	$175.00

MODEL COMPATIBILTY	SR130	SR150 SR160	SR175 SV185	SR200 SR210	SR220		SV250 SR250	SV300		TR270			TR320 TV380	REQ'D EQUIPMENT					
		410	420	430	440	435	445 450	465	420CT		440CT	445CT 450CT		STD FLOW	HIGH FLOW	CASE DRAIN	FRONT ELEC	DEMO DOOR	2ND AUX
60" HOPPER BROOM	•	•	•	•										R					
72" HOPPER BROOM		•	•	•	•	•	•	•	•	•	•		•	R					
84" HOPPER BROOM				•	•	•	•	•		•	•	•	•	R					

FEATURES

- Bi-directional motor for forward or reverse sweeping
- High capacity single drive motor for 10-25 gpm systems
- Direct drive brush motor eliminates chains and sprockets
- No caster wheel allows closer proximity to objects and better contact with sweeping surface
- Peripheral rubber skirt keeps debris and dust contained
- Combination poly and wire brush
- Replaceable bolt-on bucket edge
- No chains needed for dumping
- Optional gutter brush mounts on left or right side. Order 2 for both.

APPLICATIONS

- Street cleaning & parking lot maintenance, road maintenance clean-up, bridge deck clean-up, jobsite clean-up

REQUIREMENTS FOR OPERATION

- Standard auxiliary hydraulics

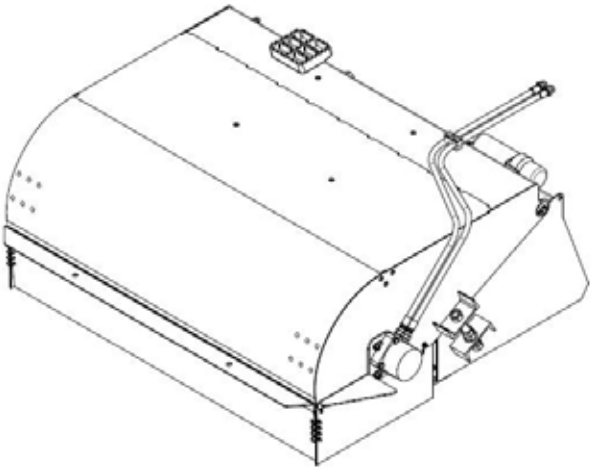

BROOMS, PICK-UP

SKID STEER LOADERS/COMPACT TRACK LOADERS

Ex Works – Dexter, MI

Units are shipped with mounting bracket, hoses, quick disconnects.

	PART NUMBER	WEIGHT LB	PRICE
60" PICK-UP BROOM with poly/wire combination brush	87553107	1200	$6,112.00
72" PICK-UP BROOM with poly/wire combination brush	87553108	1294	$6,611.00
84" PICK-UP BROOM with poly/wire combination brush	87553109	1385	$7,685.00

OPTIONS (Order as Needed)

Dust control kit, broom mount, (includes 25 gallon tank, nozzles and hose)	445999A1	50	$1,498.00
Single gutter brush kit, fits 60", 72" and 84". Mounts right or left (wire only)	84124630	95	$1,394.00
Dual gutter brush kit, fits 60", 72" and 84" (wire only)	84124631	180	$2,787.00

Loader-mounted water kits available separately. See "Water Kit" page for details.

REPLACEMENT BRUSH SETS

Poly/wire brush set for 60" broom	84375436	97	$416.00
Poly/wire brush set for 72" broom	84375437	113	$487.00
Poly/wire brush set for 84" broom	84375438	134	$582.00

REPLACEMENT BOLT-ON EDGES

Bolt-on edge for 60" broom	47559995	36	$146.00
Bolt-on edge for 72" broom	47559997	42	$161.00
Bolt-on edge for 84" broom	47559999	48	$175.00

MODEL COMPATIBILTY	SR130	SR150 SR160	SR175 SV185	SR200 SR210	SR220		SV250 SR250	SV300		TR270			TR320 TV380	REQ'D EQUIPMENT					
		410	420	430	440	435	445 450	465	420CT		440CT	445CT 450CT		STD FLOW	HIGH FLOW	CASE DRAIN	FRONT ELEC	DEMO DOOR	2ND AUX
60" PICK-UP BROOM	•	•	•	•										R					
72" PICK-UP BROOM		•	•	•	•	•	•	•	•	•	•		•	R					
84" PICK-UP BROOM				•	•	•	•	•		•	•	•	•	R					

FEATURES

- Bi-directional motor for forward or reverse sweeping
- High capacity single drive motor for 10-23 gpm systems
- Quick-change brush without breaking hydraulic lines.
- Drive motor can be removed for brush change without tools
- No tools required for brush pattern adjustment
- "Volumizing" feature for increased bucket capacity
- Heavy duty caster wheel and wheel mount
- Integral sprinkler nozzle mounts
- Flat face hydraulic quick disconnects included
- Hydraulic hoses and disconnects included
- Optional gutter brush, mounts left, right, or in tandem
- Combination poly and wire brush
- Replaceable bolt-on bucket edge
- Direct drive brush motor eliminates chains and sprockets

APPLICATIONS

- Street cleaning & parking lot maintenance, road maintenance clean-up, bridge deck clean-up, jobsite clean-up

REQUIREMENTS FOR OPERATION

- Standard auxiliary hydraulics

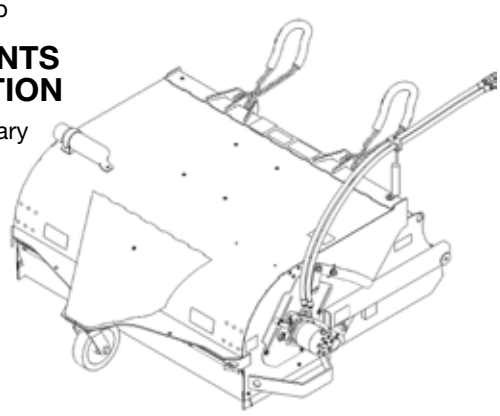

BUCKETS, 4X1 (UTILITY)

SKID STEER LOADERS/COMPACT TRACK LOADERS

Ex Works – Delhi, IA

	PART NUMBER	WEIGHT LB	PRICE
BUCKET, 4X1 UTILITY, 66" (10.2 ft³ struck/ 14.2 ft³ heaped capacity)	87648133	650	$3,550.00
BUCKET, 4X1 UTILITY, 72" (11.2 ft³ struck/ 15.6 ft³ heaped capacity)	87648134	685	$3,803.00

OPTIONS FOR UTILITY DUTY BUCKETS

Bolt-on spill guard for 66" 4X1 bucket	87648135	28	$142.00
Bolt-on spill guard for 72" 4X1 bucket	87648136	30	$139.00

MODEL COMPATIBILTY	SR130	SR150 SR160	SR175 SV185	SR200 SR210		SR220		SV250	SR250 SV300		TR270			TR320 TV380	REQ'D EQUIPMENT					
		410	420		430	440	435	445	450 465	420CT		440CT	445CT 450CT		STD FLOW	HIGH FLOW	CASE DRAIN	FRONT ELEC	DEMO DOOR	2ND AUX
66" 4x1 BUCKET (UTILITY)	•	•	•							•					R					
72" 4x1 BUCKET (UTILITY)		•	•	•	•	•				•					R					

FEATURES

- Includes hoses and QDs
- 2" cylinder bore; 1-1/8" diameter rod
- Fixed greaseable cylinder ends
- 10 ga. 100K psi bucket construction
- 1/2" x 4" wear strips on bucket floor
- 2,350 lb. clamping force
- 34-5/8" clam opening
- 23-1/8" floor length
- Optional spill guards increase struck capacity approx. 29% and heaped capacity approx. 24%
- Compatible with toothbars and bolt-on edges

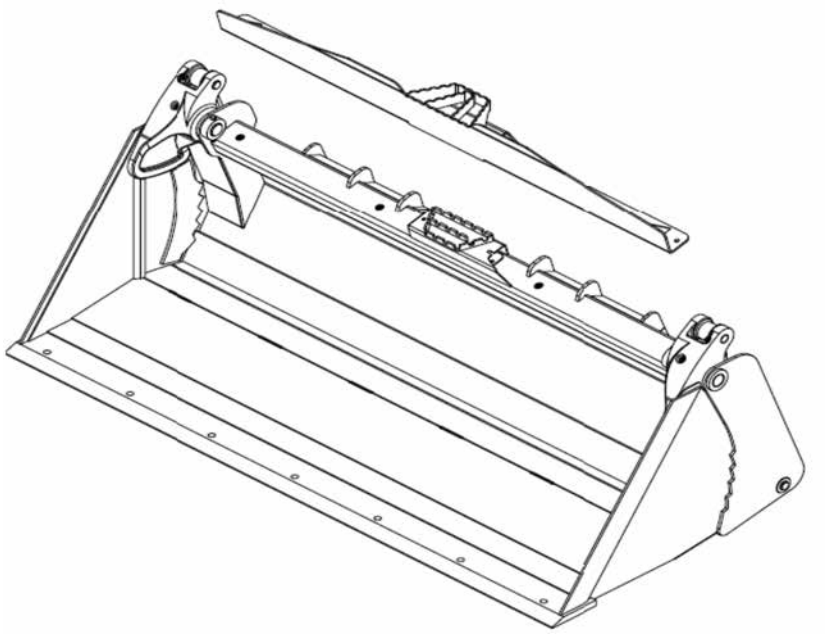

APPLICATIONS

- Functions as a loader bucket, clam, dozer, scraper and bottom dump bucket
- Material spreading – gravel, mulch, dirt, etc.

Width	Bolt-on Edge	Bolt-on Rezloh™ edge	Toothbar for bucket w/o bolt-on edge	Toothbar for bucket with bolt-on edge
66"	86577167	HCE86577167	9624721H	86599707H
72"	86577169	HCE86577169	9624722H	86599708H

BUCKETS, 4X1 (CONSTRUCTION)

SKID STEER LOADERS/COMPACT TRACK LOADERS

Ex Works – Delhi, IA

	PART NUMBER	WEIGHT LB	PRICE
BUCKET, 4X1 CONSTRUCTION, 72" (12.5 ft³ struck/ 17.8 ft³ heaped)	87648161	930	$4,336.00
BUCKET, 4X1 CONSTRUCTION, 78" (13.6 ft³ struck/19.3 ft³ heaped)	87648162	965	$4,459.00
BUCKET, 4X1 CONSTRUCTION, 84" (14.6 ft³ struck/20.8 ft³ heaped)	87648163	1005	$4,607.00

OPTIONS FOR CONSTRUCTION DUTY BUCKETS

Bolt-on spill guard for 72" 4X1 bucket	87648136	30	$139.00
Bolt-on spill guard for 78" 4X1 bucket	87648165	33	$165.00
Bolt-on spill guard for 84" 4X1 bucket	87648166	35	$175.00

MODEL COMPATIBILTY	SR130 SR150 SR160		SR175 SV185		SR200 SR210 SR220		SV250 SR250	SV300		TR270			TR320 TV380	REQ'D EQUIPMENT					
	410	420		430	440	435	445 450	465	420CT		440CT	445CT 450CT		STD FLOW	HIGH FLOW	CASE DRAIN	FRONT ELEC	DEMO DOOR	2ND AUX
72" 4x1 BUCKET (CONSTR)			•	•	•	•	•	•	•	•	•			R					
78" 4x1 BUCKET (CONSTR)					•	•	•	•		•	•		•	R					
84" 4x1 BUCKET (CONSTR)						•	•	•				•	•	R					

FEATURES

- Includes hoses and QDs
- 2-1/2" cylinder bore; 1-1/4" diameter rod
- Spherical, greaseable cylinder ends
- 1" x 6" clam cutter bar
- 7 ga, 100K psi bucket construction
- 5/8" x 5" wear strips on bucket floor
- Dual pilot-operated check hydraulic system for positive load holding.
- 4,000 lb. clamping force
- 34-3/4" clam opening
- 26-5/8" floor length
- Replaceable bolt-on side cutters
- Optional spill guards (increase struck capacity approx. 26% and heaped capacity approx 21%)
- Compatible with toothbars and bolt-on edges

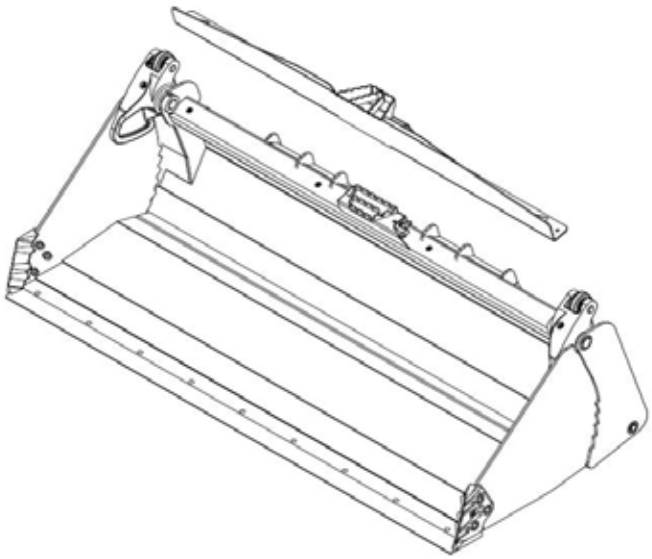

APPLICATIONS

- Functions as a loader bucket, clam, dozer, scraper and bottom dump bucket
- Material spreading – gravel, mulch, dirt, etc.

Width	Bolt-on Edge	Bolt-on Rezloh™ edge	Toothbar for bucket w/o bolt-on edge	Toothbar for bucket with bolt-on edge
72"	86577169	HCE86577169	87299776	87299779
78"	86577171	HCE86577171	87299777	87299780
84"	86577173	HCE86577173	87299778	87299781

BUCKETS, POWER SIDE DISCHARGE

SKID STEER LOADERS/COMPACT TRACK LOADERS

Ex Works – Dexter, MI

STANDARD AUXILIARY BOOM HYDRAULICS REQUIRED	PART NUMBER	WEIGHT LB	PRICE
BUCKET, POWER SIDE DISCHARGE (sand), 60"	84195960	805	$5,607.00
BUCKET, POWER SIDEDISCHARGE (sand), 72"	84195961	915	$7,362.00
BUCKET, POWER SIDE DISCHARGE (sawdust), 72"	84195962	1120	$7,908.00
BUCKET, POWER SIDE DISCHARGE (sawdust), 84"	84195963	1300	$9,772.00

MODEL COMPATIBILTY	SR130	SR150 SR160	SR175 SV185	SR200 SR210	SR220		SV250	SR250	SV300		TR270			TR320 TV380	REQ'D EQUIPMENT					
		410	420	430	440	435	445	450	465	420CT		440CT	445CT 450CT		STD FLOW	HIGH FLOW	CASE DRAIN	FRONT ELEC	DEMO DOOR	2ND AUX
60" POWER SIDE DISCHARGE (SAND)	•	•	•								•				R					
72" POWER SIDE DISCHARGE (SAND)		•	•	•	•	•	•	•	•	•	•	•			R					
72" POWER SIDE DISCHARGE (SAWDUST)		•	•	•	•	•	•	•	•	•	•	•		•	R					
84" POWER SIDE DISCHARGE (SAWDUST)					•	•	•	•	•			•	•	•	R					

FEATURES

- Adjustable discharge gates
- Rubber discharge belt with exposure baffle
- Left or right discharge
- Sawdust model includes agitator to eliminate bridging

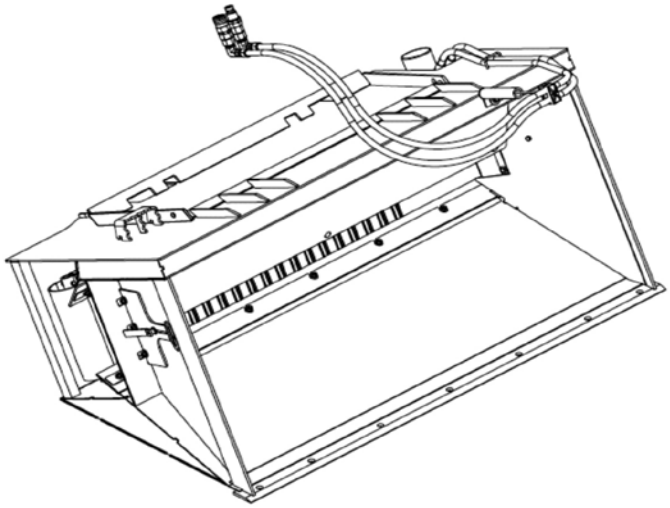

APPLICATIONS

- The power side discharge buckets are designed to collect and discharge sawdust, mulch, and sand into barns, stalls and orchards, or backfill. Capable of spreading a variety of of materials such as silage, stone, or topsoil.
- Road maintenance, agriculture, landscaping, sand bagging

REQUIREMENTS

- Standard auxiliary hydraulics
- Bolt-on cutting edge recommended (see below)

	WEIGHT (lbs.)	HEIGHT (in.)	DEPTH (in.)	CAPACITY (yd^3)	Material Performance Rating*					
					Sand	Aggregate	Topsoil	Sawdust	Mulch	Silage
60" (SAND)	869	31.8	39.5	0.55	Best	Good	Good	Poor	Poor	Fair
72" (SAND)	959	31.8	39.5	0.68	Best	Good	Good	Poor	Poor	Fair
72" (SAWDUST)	1,184	45.3	47	1.34	Fair	Fair	Fair	Best	Best	Good
84" (SAWDUST)	1,328	45.3	47	1.58	Fair	Fair	Fair	Best	Best	Good

* Ratings consider the material to be in a typical working condition with respect to moisture content. In most cases, as moisture content increases, performance will be adversely affected.

Width	Bolt-on Edge	Hardware kit
60"	86577165	86635434
72"	86577169	86635434
84"	86577173	86635435

CHIPPER

SKID STEER LOADERS/COMPACT TRACK LOADERS

Ex Works – W. Fargo, ND

AUXILIARY BOOM HYDRAULICS REQUIRED (High Flow as indicated)	PART NUMBER	WEIGHT LB	PRICE
MODEL 74500 STANDARD FLOW CHIPPER	87330077	1145	$9,814.00
MODEL 74800 HIGH FLOW CHIPPER	87330078	1525	$13,249.00

MODEL COMPATIBILTY	SR130 SR150 SR160	410	SR175 SV185 420	SR200 SR210 430	SR220 440	435	SV250 SR250 445 450	SV300 465	420CT	TR270	440CT	445CT 450CT	TR320 TV380	REQ'D EQUIPMENT STD FLOW	HIGH FLOW	CASE DRAIN	FRONT ELEC	DEMO DOOR	2ND AUX
CHIPPER - STD. FLOW		•	•	•	•	•	•	•	•	•	•	•	•	R		R			
CHIPPER - HIGH FLOW			•	•	•	•	•	•	•	•	•	•	•		R	R			

SPECIFICATIONS		
MODEL	74500	74800
Hydraulics	standard-flow, min. 15 gpm	high-flow, min. 25 gpm
Feed Opening Size	5 1/2" x 7"	9" x 9"
Continuous Chipping Size	3"	5"
Feed System	Variable hydraulic	Variable hydraulic
Chipper Disc	20" x 1-1/4" 140 lbs.	30" x 1-1/4" 275 lbs.
Operating Weight (lbs.)	1,145	1,525

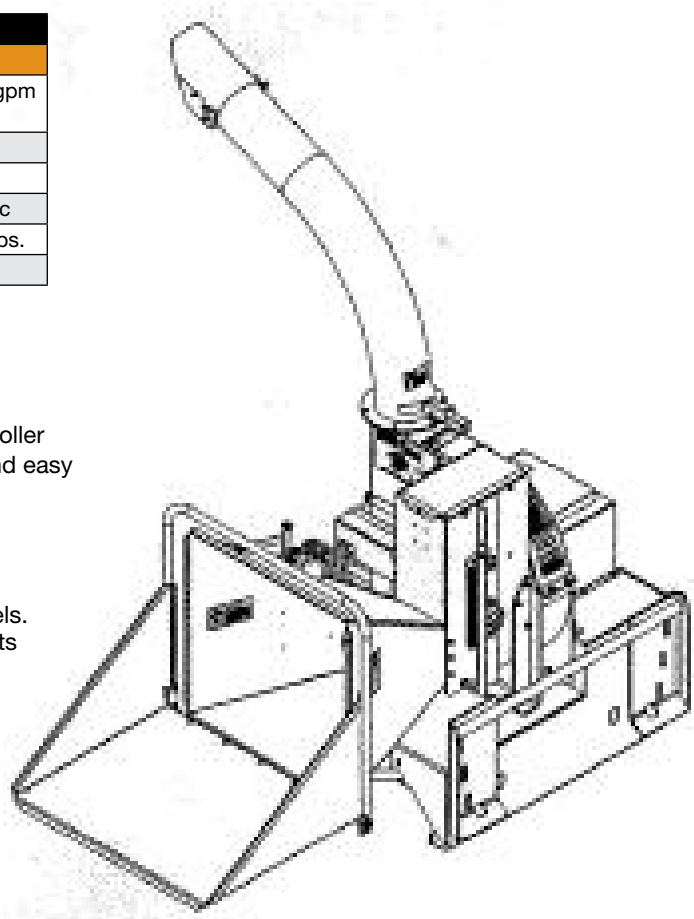

FEATURES

- Chipper has two mounts, so it can be set to feed in front or to the curb side
- Four position manual valve easily controls the hydraulic feed roller
- Built-in hydraulic jack makes feed roller maintenance quick and easy
- Infinitely variable feed roll speed
- Feed roll control lever accessible on both sides of unit

REQUIREMENTS FOR OPERATION

- Case drain line required for both standard and high flow models. Case drain kit available for 400-series loaders. See loader parts catalog for prior models.
- Standard flow, min. 15 gpm for Model 74500
- High flow, min. 25 gpm for Model 74800

APPLICATIONS

- Chip brush, limbs from tree trimming, land clearing and storm damage clean-up

COLD PLANER, HIGH FLOW

SKID STEER LOADERS/COMPACT TRACK LOADERS

Ex Works – Delhi, IA

HIGH FLOW COLD PLANER

For specified skid-steer loaders equipped with optional high flow, auxiliary boom hydraulics. Includes drum, hydraulic depth, tilt, hydraulic sideshift, hoses, fittings and quick couplers.

	PART NUMBER	WEIGHT LB	PRICE
COLD PLANER HP16* - 16" with hydr. controls (22 - 28 gpm)	84539377	2150	$19,331.00
COLD PLANER HP18 - 18" with hydr. controls (22 - 28 gpm)	84539378	2200	$19,989.00
COLD PLANER HP16* - 16" with hydr. controls (31 - 35 gpm)	84539379	2150	$19,341.00
COLD PLANER HP18 - 18" with hydr. controls (31 - 35 gpm)	84539380	2200	$19,999.00
COLD PLANER HP24 - 24" with hydr. controls (31 - 35 gpm)	84539381	2400	$22,954.00
COLD PLANER HP30 - 30"with hydr. Controls (31 - 35 gpm)	84539382	2600	$23,832.00
COLD PLANER HP40 - 40" with hydr. controls (31 - 35 gpm)	84539383	3100	$29,217.00
EHF COLD PLANER HP24 - 24" with hydr. Controls (31 - 35 gpm)	84523776	2400	$24,059.00
EHF COLD PLANER HP30 - 30" with hydr. Controls (31 - 35 gpm)	84523778	2600	$24,947.00
EHF COLD PLANER HP40 -40" with hydr. Controls (31 - 35 gpm)	84523780	3100	$30,332.00

*16" drum installed in 18" housing.

ADDITIONAL COMPONENTS (Order as Needed)

2.5" slot cutting drum for HP16, HP18, HP24, HP30, HP40	87045459	120	$1,755.00
4" slot cutting drum for HP16, HP18, HP24, HP30, HP40	87045460	135	$1,785.00
6" slot cutting drum for HP16, HP18, HP24, HP30, HP40	87045461	150	$2,121.00
Universal electric control kit for units without front electric (not for EHF planers)	47403651	4	$818.00
Wire harness adapter (adapts pre-9/1/2001 75XT, 85XT, 90XT, 95XT w/8-pin connector to 14-pin connector)	87048529	2	$151.00
Water nozzle kit, includes 3 spray nozzles, tubing and fitting to reach coupler on loader boom for SP12 - HP30	87045462	10	$273.00
Water nozzle kit, includes 4 spray nozzles, tubing and fitting to reach coupler on loader boom for HP40	87326406	12	$328.00

Pressurized Water Kit available. See "Water Kit" page for details

MODEL COMPATIBILTY	SR130 SR150 SR160		SR175 SV185		SR200 SR210	SR220	SV250		SR250	SV300			TR270		TR320 TV380	REQ'D EQUIPMENT						
	410	420		430		440 435	445 450	465			420CT	440CT		445CT 450CT		STD FLOW	HIGH FLOW	EHF	CASE DRAIN	FRONT ELEC	DEMO DOOR	2ND AUX
16" COLD PLANER (22-28)			•														R		R	R		
18" COLD PLANER (22-28)			•														R		R	R		
16" COLD PLANER (31-35)		•		•	•	•	•	•	•	•	•	•	•	•	•		R		R	R		
18" COLD PLANER (31-35)				•	•	•	•	•	•	•		•	•	•	•		R		R	R		
24" COLD PLANER (31-35)					•	•	•	•	•	•		•	•	•	•		R		R	R		
30" COLD PLANER (31-35)						•	•	•	•	•		•		•	•		R		R	R		
40" COLD PLANER (31-35)							•	•	•	•				•	•		R		R	R		
EHF 24" COLD PLANER (31-35)									•	•					•	R		R	R	R		
EHF 30" COLD PLANER (31-35)									•	•					•	R		R	R	R		
EHF 40" COLD PLANER (31-35)									•	•					•	R		R	R	R		

Cold Planers, High Flow (Continued next page)

COLD PLANER, HIGH FLOW

SKID STEER LOADERS/COMPACT TRACK LOADERS

Ex Works – Delhi, IA

FEATURES

- Convenient for planing frost heaves, expansion joints and removing lane markings
- Independent pivoting head for better contour tracking
- Removable wheels for planing next to curbs and obstructions
- Hinged cover for pick maintenance access
- Pick maintenance tool included
- Solid steel wheel construction (hardened) with greasable manifold pins and secluded zerks
- Plated and powder-coated surfaces offer resistance to harsh environments
- High rear spoil clearance to prevent recirculation of material
- T1 steel construction in high wear areas
- ± 8° tilt capability
- 0-5" cutting depth, 0-19" sideshift center to right
- Convenient, fully electro-hydraulic, in-cab control for depth, tilt, and sideshift
- Depth and tilt position indicators
- Protective shields for hydraulic and electrical components
- Independent self-leveling depth adjustment shoe depth adjustment allows for precise lapping cuts and taper cuts (i.e. multiple pass and approaches to RR crossings)
- Efficient piston drive motor
- Planetary drive delivers high torque
- Universal, general purpose picks standard

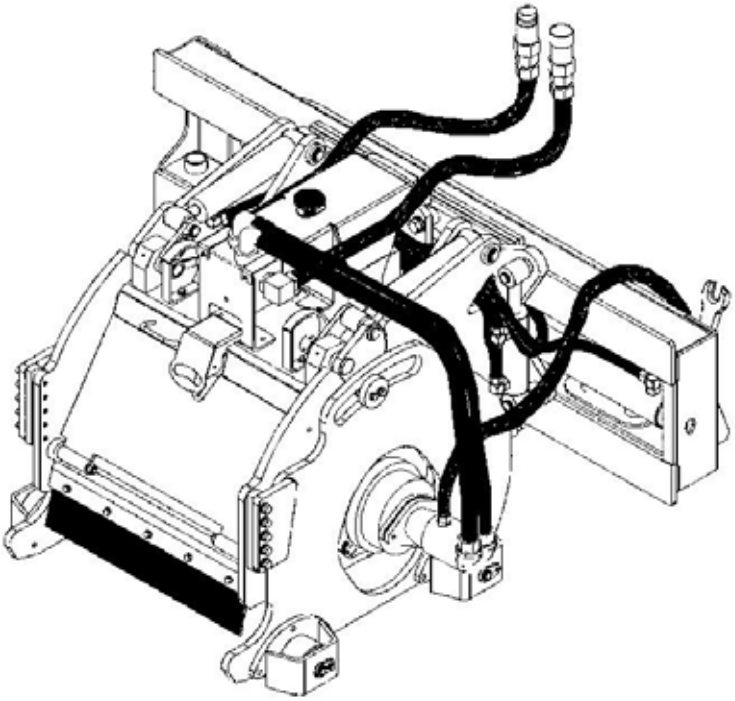

REQUIREMENTS FOR OPERATION

- High flow auxiliary hydraulics (EHF for specified units)
- Front electric control kit or universal electric control kit
- Case drain

APPLICATIONS

- For heavy duty planing jobs, including milling transition and repair areas, frost heaves and expansion joints

COLD PLANER, STANDARD FLOW

SKID STEER LOADERS/COMPACT TRACK LOADERS

Ex Works – Delhi, IA

STANDARD FLOW COLD PLANER

For specified skid-steer loaders equipped with standard auxiliary boom hydraulics. Includes drum, manual depth and tilt, hydraulic sideshift, hoses, fittings and quick couplers. Fully hydraulic controls are optional.

STANDARD BOOM HYDRAULICS (12 - 22 gpm)	PART NUMBER	WEIGHT LB	PRICE
COLD PLANER SP12M-12" manual controls	87048530	1450	$11,517.00
COLD PLANER SP12H -12" with hydraulic controls. Requires front electric kit.	87048531	1500	$13,967.00

ADDITIONAL COMPONENTS (Order as Needed)

2.5" slot cutting drum for SP12	87045458	90	$1,395.00
Water nozzle kit, includes 3 spray nozzles, tubing, and fitting to reach coupler on loader boom for SP12 - HP 30	87045462	10	$273.00
Wire harness adapter (adapts pre-9/1/2001 75XT, 85XT, 90XT, 95XT w/8-pin connector to 14-pin connector)	87048529	2	$151.00

Pressurized Water Kit available. See "Water Kit" page for details

MODEL COMPATIBILTY	SR130 SR150 SR160	410	SR175 SV185 420	SR200 SR210 430	SR220 440	435	SV250 SR250 445 450	SV300 465	420CT	TR270	440CT	445CT 450CT	TR320 TV380	REQ'D EQUIPMENT STD FLOW	HIGH FLOW	CASE DRAIN	FRONT ELEC	DEMO DOOR	2ND AUX
12" COLD PLANER - MANUAL (12-22)	•	•	•	•	•	•	•	•	•	•	•	•	•	R					
12" COLD PLANER - HYD (12-22)		•	•	•	•	•	•	•	•	•	•	•	•	R			R		

FEATURES

- Independent pivoting head for better contour tracking
- Removable wheels for planing next to curbs and obstructions
- Hinged cover for pick maintenance access
- Solid steel wheel construction (hardened) with greasable manifold pins and secluded zerks
- Pick maintenance tool included
- Plated and powder-coated surfaces offer resistance to harsh environments
- High rear spoil clearance to prevent recirculation of material
- T1 steel construction in high wear areas
- 19" drum diameter with 37 general purpose carbide picks
- ± 11° tilt capability
- 0-5" cutting depth, 0-19" sideshift center to right
- Manual depth and tilt, hydraulic sideshift on SP12M
- Fully electro-hydraulic, in-cab control for depth, tilt, and sideshift on SP12H
- Depth and tilt position indicators
- Planetary drive delivers high torque
- Protective shields for hydraulic and electrical components
- Integral water nozzle ports
- Universal, general purpose picks standard

REQUIREMENTS FOR OPERATION

- Standard auxiliary hydraulics
- Front electric kit (SP12H)

APPLICATIONS

- Convenient for planing frost heaves, expansion joints, and removing lane markings

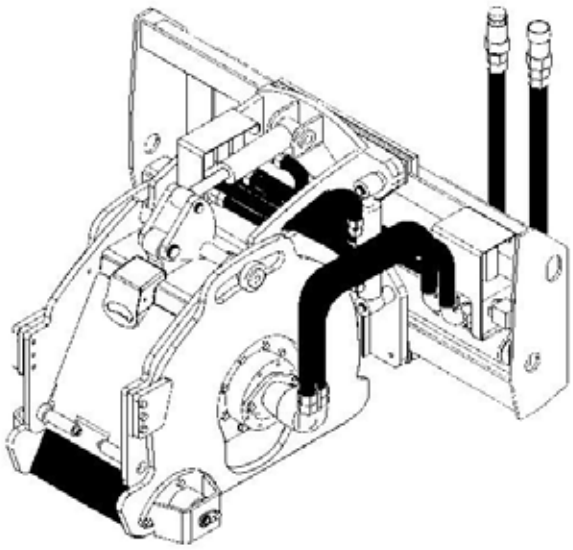

Cold Planers, High Flow (Continued next page)

COLD PLANERS – SPECIFICATIONS

SKID STEER LOADERS/COMPACT TRACK LOADERS

Ex Works – Delhi, IA

SPECIFICATIONS						
MODEL	**SP12**	**HP16***	**HP18**	**HP24**	**HP30**	**HP 40**
Operating Weight - lb. (kg)	1400 (635)	2100 (952)	2150 (975)	2350 (1066)	2550 (1157)	3100 (1338)
Cutting Depth - in. (mm)	0-5 (0-127)	0-5 (0-127)	0-5 (0-127)	0-5 (0-127)	0-5 (0-127)	0-5 (0-127)
Cutting Width - in. (mm)	12 (305)	16 (450)	18 (450)	24 (600)	30 (762)	40 (1016)
Drum Diameter - in. (mm)	19 (482)	22 (559)	22 (559)	22 (559)	22 (559)	22 (559)
Tilt	± 11°	± 8°	± 8°	± 8°	± 8°	± 8°
Sideshift - in. (mm)	0-19 (0-483) center to right	-3-22 (-76-560) center to right	-3-22 (-76-560) center to right	-3-22 (-76-560) center to right	-3-22 (-76-560) center to right	-3-22 (-76-560) center to right
Hydraulic requirement-gpm (l/m)	12- 22 (45-83)	22-28 or 31-35 (83-151 or 117-132)	22-28 or 31-35 (83-151 or 117-132)	31 - 35 (117-132)	31 - 35 (117-132)	31 - 35 (117-132)
Hydraulic requirement - psi (bar)	2500-3000 (172-206)	2500-3000 (172-206)	2500-3500 (172-241)	2500-3500 (172-241)	2500-3500 (172-241)	2500-3500 (172-241)
EHF Hydraulic requirement -psi (bar)				4000 (275)	4000 (275)	4000 (275)
Wheels/shoes	Both with independent left/right control	Both with independent left/right control	Both with independent left/right control	Both with independent left/right control	Both with independent left/right control	Both with independent left/right control
Drive	Planetary	Planetary	Planetary	Planetary	Planetary	Planetary
Controls	Manual - SP12 Hyd. - SP12H hydraulic optional	Full hydraulic with in-cab controls	Full hydraulic with in-cab controls	Full hydraulic with in-cab controls	Full hydraulic with in-cab controls	Full hydraulic with in-cab controls
No. of Carbide Picks	37	43	45	57	69	89

* 16" drum installed in 18" housing.

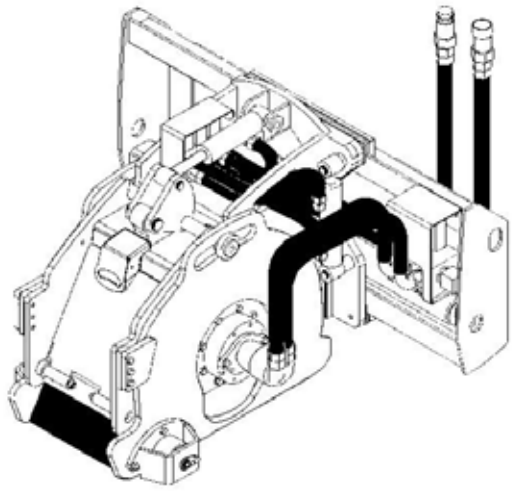

SP12

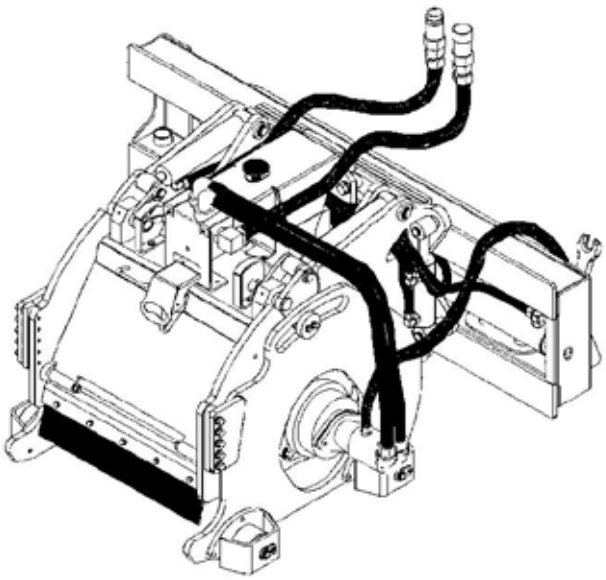

HP24

CONCRETE BUCKET

SKID STEER LOADERS/COMPACT TRACK LOADERS

Ex Works – Dexter, MI

Unit complete with bucket, mounting bracket, hoses, quick couplers and chute extensions.

STANDARD AUXILIARY BOOM HYDRAULICS REQUIRED	PART NUMBER	WEIGHT LB	PRICE
C50 CONCRETE BUCKET (1/2 yd cap.)	87398932	450	$2,447.00
C75 CONCRETE BUCKET (3/4 yd cap.)	87398933	500	$2,705.00

MODEL COMPATIBILTY	SR130 SR150 SR160	410	420	430	440	435	445 450	465	420CT	TR270	440CT	445CT 450CT	TR320 TV380	REQ'D EQUIPMENT					
			SR175 SV185	SR200 SR210	SR220		SV250 SR250	SV300						STD FLOW	HIGH FLOW	CASE DRAIN	FRONT ELEC	DEMO DOOR	2ND AUX
C50 CONCRETE BUCKET	•	•	•	•	•	•	•	•	•	•	•	•	•	R					
C75 CONCRETE BUCKET					•	•	•	•		•		•	•	R					

FEATURES

- Hydraulically actuated gate for precise concrete metering
  Dispenses concrete safely and easily into column and wall forms
- Ideal for pools and patios
- Quick, clean and accurate placement of concrete without a wheelbarrow
- Removable chute extension
- Safety door keeps co-workers safe from dispensing gate
- 58" wide. Can be easily picked up and transported in a standard 60" bucket

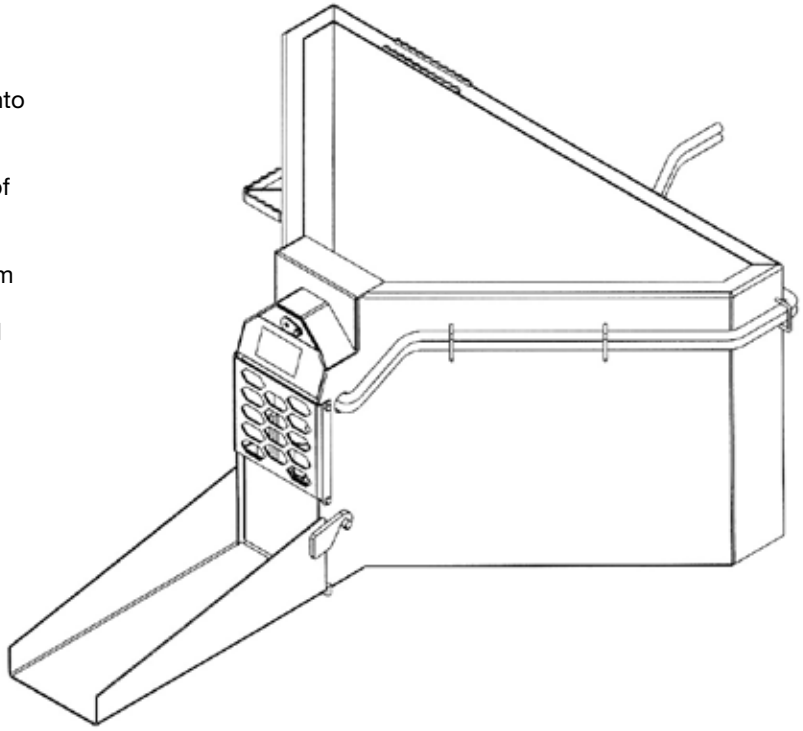

CONCRETE CLAW

SKID STEER LOADERS/COMPACT TRACK LOADERS

Ex Works – Dexter, MI

	PART NUMBER	WEIGHT LB	PRICE
CONCRETE CLAW	87045489	575	$2,305.00

MODEL COMPATIBILTY	SR130 SR150 SR160	SR175 SV185	SR200 SR210	SR220		SV250 SR250	SV300		TR270			TR320 TV380	REQ'D EQUIPMENT					
	410	420	430	440	435	445 450	465	420CT		440CT	445CT 450CT		STD FLOW	HIGH FLOW	CASE DRAIN	FRONT ELEC	DEMO DOOR	2ND AUX
C50 CONCRETE BUCKET	•	•	•	•	•	•	•	•	•	•	•	•						

FEATURES

- Excellent attachment for concrete removal on sidewalks, driveways or any construction site.
- Slide the claw teeth under the concrete, lift & load.
- Allows for a cleaner, quicker, and more efficient method of concrete removal.
- Features name-brand replaceable points with 1-1/2" wide shanks.
- Rubberized flex pins securely fasten eplaceable points.
- End plates and tooth shanks are made with high strength T-1 steel.
- 1" x 8" wear resistant steel tapered cutting edge.

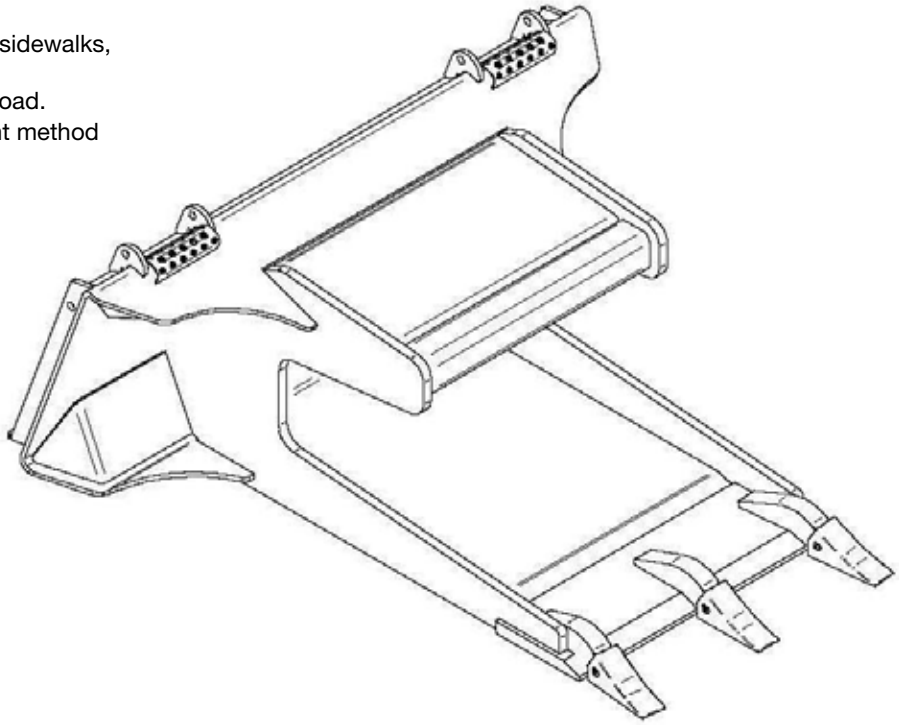

DOZER BLADES

SKID STEER LOADERS/COMPACT TRACK LOADERS

Ex Works – W. Fargo, ND

STANDARD AUXILIARY BOOM HYDRAULICS REQUIRED	PART NUMBER	WEIGHT LB	PRICE
PL1300 DOZER BLADE, 72"	87387403	1360	$5,530.00
PL1300 DOZER BLADE, 84"	87387404	1440	$5,620.00
PL1300 DOZER BLADE, 96"	87387405	1490	$5,715.00

BASE UNIT OPTIONS (Must Order One for Complete Unit)

Universal wiring kit (includes full wiring to cab and battery with cab -mounted switch)	87015256	3	$77.75
Wiring adapter kit (for use with loaders equipped with front electric kit. Includes adapter to 14-pin boom connector).	86602638	2	$103.00
Wire harness adapter (adapts pre-9/1/2001 75XT, 85XT, 90XT, 95XT w/8-pin connector to 14-pin connector)	87048529	2	$151.00

MODEL COMPATIBILTY	SR130 SR150 SR160	SR175 SV185	SR200 SR210	SR220		SV250 SR250	SV300		TR270			TR320 TV380	REQ'D EQUIPMENT					
	410	420	430	440	435	445 450	465	420CT		440CT	445CT 450CT		STD FLOW	HIGH FLOW	CASE DRAIN	FRONT ELEC	DEMO DOOR	2ND AUX
72" DOZER BLADE	•	•	•	•	•			•	•	•			R			O		
84" DOZER BLADE		•	•	•	•	•	•	•	•	•		•	R			O		
96" DOZER BLADE			•	•	•	•	•				•	•	R			O		

FEATURES

- Rugged, heavy-duty cast moldboard and mounting frame
- Bolt-on reversible cutting edge
- Adjustable skid shoes - standard
- Blade angles 30 degrees left or right
- Blade tilts 10 degrees

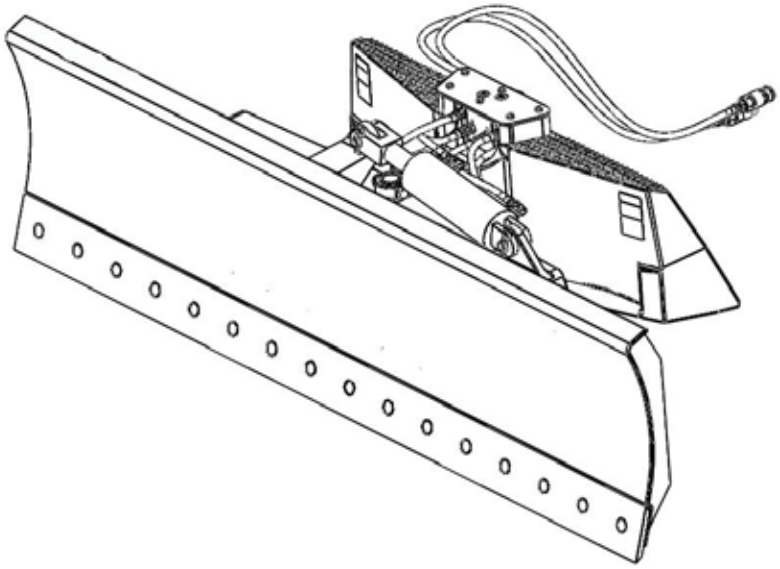

GRADER RAKES

SKID STEER LOADERS/COMPACT TRACK LOADERS

Ex Works – Dexter, MI

STANDARD AUXILIARY BOOM HYDRAULICS REQUIRED	PART NUMBER	WEIGHT LB	PRICE
GRADER RAKE, 82"	87382026	865	$4,506.00
GRADER RAKE, 92"	87382027	885	$4,825.00
GRADER RAKE, 97"	87382028	905	$4,633.00
GRADER RAKE, 102"	87382029	925	$5,012.00

MODEL COMPATIBILTY	SR130 SR150 SR160	SR175 SV185	SR200 SR210	SR220		SV250 SR250	SV300		TR270			TR320 TV380	REQ'D EQUIPMENT					
	410	420	430	440	435	445 450	465	420CT		440CT	445CT 450CT		STD FLOW	HIGH FLOW	CASE DRAIN	FRONT ELEC	DEMO DOOR	2ND AUX
GRADER RAKE, 82"	•	•	•	•	•	•	•	•	•	•		•	R					
GRADER RAKE, 92"	•	•	•	•	•	•	•	•	•	•		•	R					
GRADER RAKE, 97"		•	•	•	•	•	•	•	•	•	•	•	R					
GRADER RAKE, 102"			•	•	•	•	•				•	•	R					

FEATURES

- Separates debris for site clean-up
- Scarifies and levels hard packed soil
- Full floating design follows compound grades
- Increases productivity over conventional rake by operating in a forward direction
- Oscillates from side-to-side for crowning roads
- Angles to 35° left or right
- Caster wheels out front for accurate leveling
- Hydraulic hoses included
- Tines increase digging action for grading.
- Hydraulic quick disconnects included
- 16" x 4-1/2" tires (2)

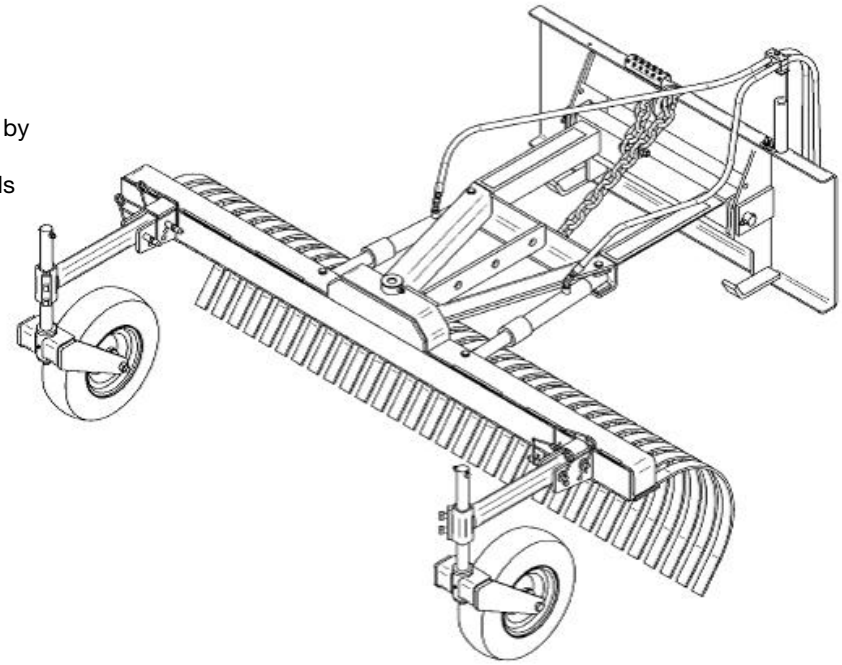

GRAPPLES, BRUSH (CONSTRUCTION)

SKID STEER LOADERS/COMPACT TRACK LOADERS

Ex Works – Delhi, IA

	PART NUMBER	WEIGHT LB	PRICE
72" CONSTRUCTION BRUSH GRAPPLE *	87678207	925	$4,453.00
78" CONSTRUCTION BRUSH GRAPPLE *	87678208	999	$4,695.00
84" CONSTRUCTION BRUSH GRAPPLE *	87678209	1054	$4,936.00
90" CONSTRUCTION BRUSH GRAPPLE *	87678210	1105	$5,056.00

*Compatible with some CWL models

MODEL COMPATIBILTY	SR130 SR150 SR160	SR175	SV185	SR200 SR210	SR220		SV250 SR250	SV300		TR270			TR320 TV380	REQ'D EQUIPMENT					
	410		420	430	440	435	445 450	465	420CT		440CT	445CT 450CT		STD FLOW	HIGH FLOW	CASE DRAIN	FRONT ELEC	DEMO DOOR	2ND AUX
72" BRUSH GRAPPLE (CONST.)			•	•	•	•	•	•	•	•	•			R					
78" BRUSH GRAPPLE (CONST.)				•	•	•	•	•	•	•	•		•	R					
84" BRUSH GRAPPLE (CONST.)							•	•				•	•	R					
90" BRUSH GRAPPLE (CONST.)							•	•				•	•	R					

FEATURES

- Dual, independent grapples
- 6" tine spacing
- Standard cylinder guards protect all cylinder components
- 1-1/4" cylinder pivot pins
- 1-1/4" x 24" grapple pins greatly reduce torsional force
- 1/2" end plates
- Cushioned and sleeved cylinders – 2" x 8" x 1-1/4"
- Standard load check valve for positive clamp force
- 100K PSI yield strength tine material
- Throat opening grapple open – 40"
- Throat opening grapple closed – 16-1/2"
- Overall depth – 39"

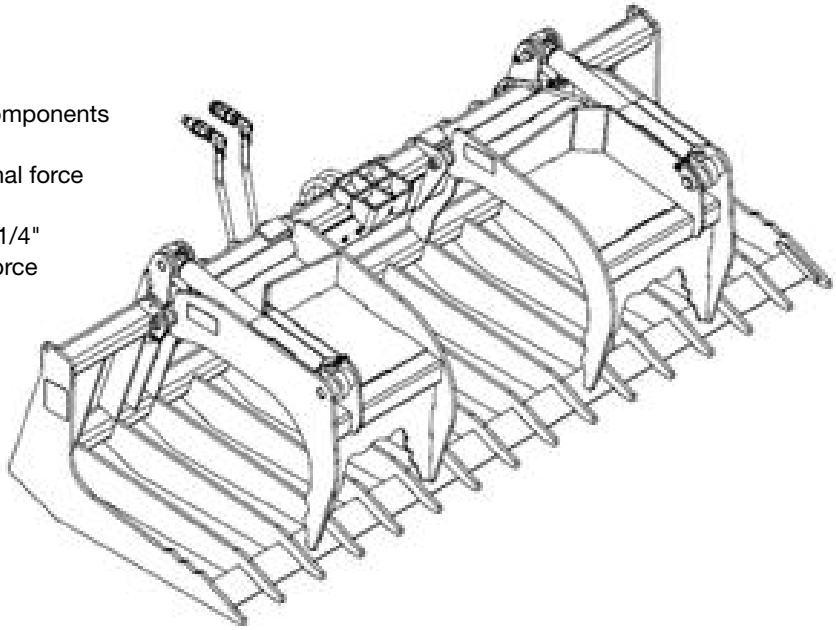

GRAPPLES, BRUSH (UTILITY)

SKID STEER LOADERS/COMPACT TRACK LOADERS

Ex Works – Delhi, IA

BASE UNITS (include hoses and QDs)

STANDARD AUXILIARY BOOM HYDRAULICS REQUIRED	PART NUMBER	WEIGHT LB	PRICE
66" UTILITY BRUSH GRAPPLE	47443896	810	$4,212.00
72" UTILITY BRUSH GRAPPLE	47443897	845	$4,373.00

MODEL COMPATIBILTY	SR130	SR150 SR160	SR175 SV185	SR200 SR210	SR220		SV250 SR250	SV300		TR270			TR320 TV380	REQ'D EQUIPMENT					
		410	420	430	440	435	445 450	465	420CT		440CT	445CT 450CT		STD FLOW	HIGH FLOW	CASE DRAIN	FRONT ELEC	DEMO DOOR	2ND AUX
66" UTILITY BRUSH GRAPPLE	•	•	•						•					R					
72" UTILITY BRUSH GRAPPLE		•	•	•					•					R					

FEATURES

- Dual, independent grapples
- 6" tine spacing
- Standard cylinder guards protect all cylinder components
- 1-1/4" cylinder pivot pins
- 1-1/4" x 24" grapple pins greatly reduce torsional force
- 3/8" end plates
- Cushioned and sleeved cylinders – 2" x 8" x 1-1/4"
- Standard load check valve for positive clamp force
- 100K PSI yield strength tine material
- Throat opening grapple open – 29"
- Throat opening grapple closed – 17-3/8"
- Overall depth – 36"

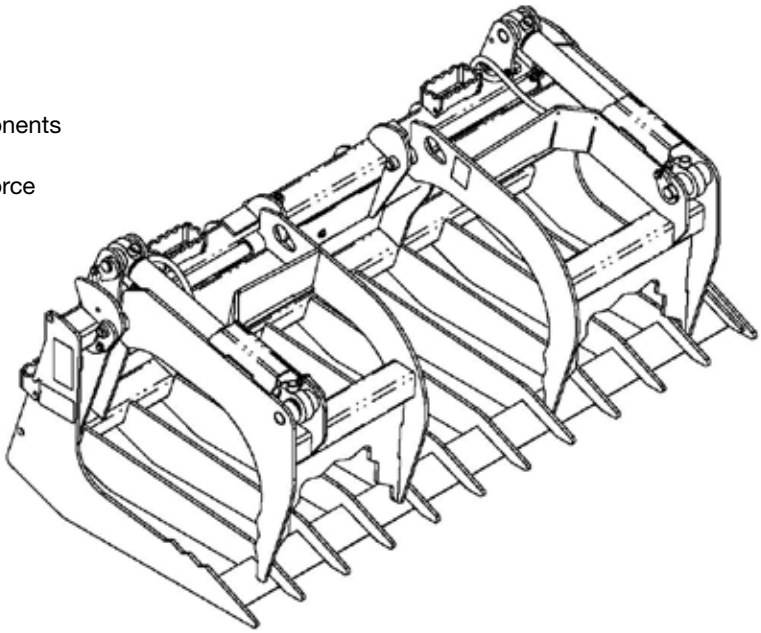

GRAPPLE, LOG

SKID STEER LOADERS/COMPACT TRACK LOADERS

Ex Works – Delhi, IA

STANDARD AUXILIARY BOOM HYDRAULICS REQUIRED	PART NUMBER	WEIGHT LB	PRICE
LOG GRAPPLE	87382066	650	$4,827.00

MODEL COMPATIBILTY	SR130 SR150 SR160	SR175 SV185	SR200 SR210	SR220		SV250 SR250	SV300		TR270			TR320 TV380	REQ'D EQUIPMENT					
	410	420	430	440	435	445 450	465	420CT		440CT	445CT 450CT		STD FLOW	HIGH FLOW	CASE DRAIN	FRONT ELEC	DEMO DOOR	2ND AUX
LOG GRAPPLE	•	•	•	•	•	•	•	•	•	•	•	•	R					

FEATURES

- Excellent attachment for handling logs, piles, brush, and other bulky materials
- 2" x 8" hydraulic cylinders
- Closes to 6" log or pipe
- 43-1/8" open height
- 29-1/2" fork length

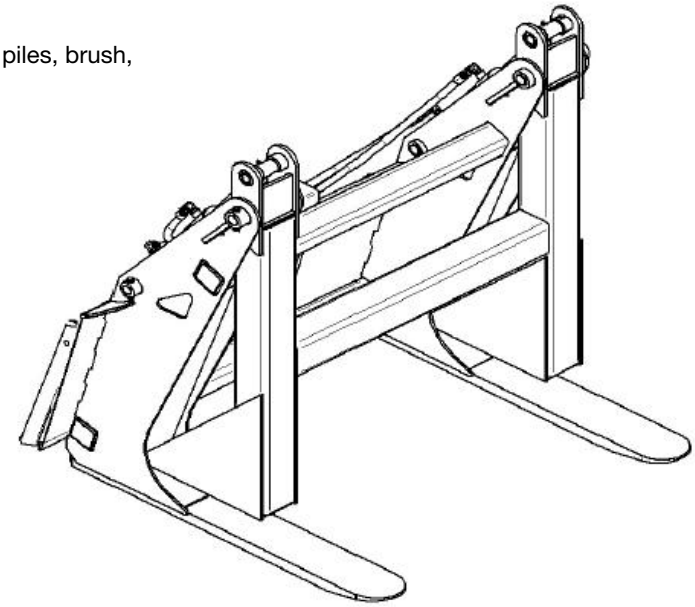

GRAPPLE, SCRAP (CONSTRUCTION)

SKID STEER LOADERS/COMPACT TRACK LOADERS

Ex Works – Delhi, IA

BASE UNITS (include hoses and QDs)

	PART NUMBER	WEIGHT LB	PRICE
76" CONSTRUCTION SCRAP GRAPPLE *	87677288	1081	$4,640.00
82" CONSTRUCTION SCRAP GRAPPLE *	87677289	1133	$4,936.00
88" CONSTRUCTION SCRAP GRAPPLE *	87677290	1180	$5,243.00

*Compatible with some CWL models

MODEL COMPATIBILTY	SR130 SR150 SR160	SR175	SV185	SR200 SR210	SR220		SV250 SR250	SV300		TR270			TR320 TV380	REQ'D EQUIPMENT					
	410		420	430	440	435	445 450	465	420CT		440CT	445CT 450CT		STD FLOW	HIGH FLOW	CASE DRAIN	FRONT ELEC	DEMO DOOR	2ND AUX
76" SCRAP GRAPPLE (CONST.)			•	•	•	•	•	•	•	•	•		•	R					
82" SCRAP GRAPPLE (CONST.)						•	•	•			•		•	R					
88" SCRAP GRAPPLE (CONST.)							•	•				•	•	R					

FEATURES

- Standard cylinder guards protect all cylinder components
- Standard load check valve for positive clamp force
- Dual independent grapples
- 1-1/4" cylinder pivot pins
- 1-1/4" x 24" grapple pins reduce torsional force
- 1/2" end plates
- Cushioned cylinders – 2" x 8" x 1-1/4"
- Bucket edge drilled for replaceable edge
- Throat opening grapple open – 40"
- Throat opening grapple closed – 20"
- Overall Depth – 38"
- Includes hoses and quick disconnects

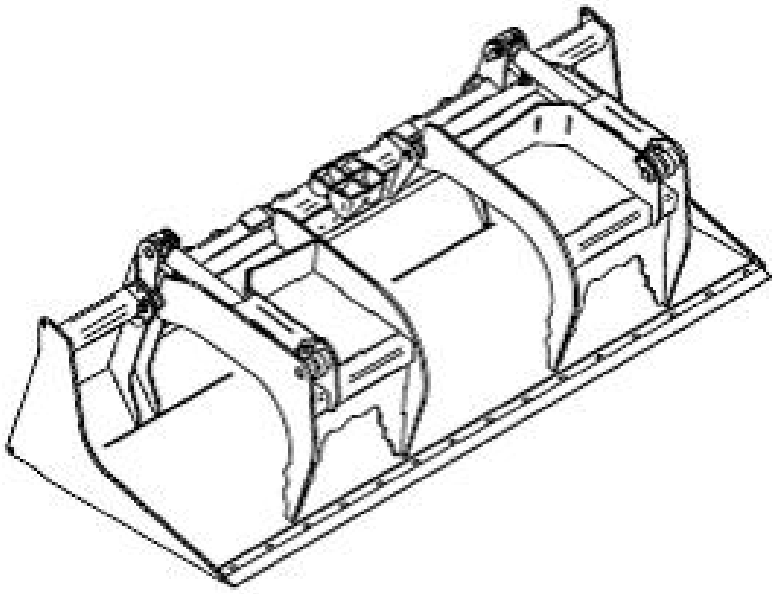

Accessories Available from CNH Industrial Parts	
Width	**Bolt-on Edge**
76"	86577171
82"	86577173
88"	85999108

GRAPPLE, SCRAP (UTILITY)

SKID STEER LOADERS/COMPACT TRACK LOADERS

Ex Works – Delhi, IA

BASE UNITS (include hoses and QDs)

	PART NUMBER	WEIGHT LB	PRICE
60" UTILITY SCRAP GRAPPLE	47443888	808	$4,076.00
66" UTILITY SCRAP GRAPPLE	47443890	858	$4,285.00
72" UTILITY SCRAP GRAPPLE	47443892	905	$4,435.00

MODEL COMPATIBILTY	SR130 SR150 SR160		SR175 SV185		SR200 SR210		SR220	SV250 SR250	SV300		TR270			TR320 TV380	REQ'D EQUIPMENT					
		410 420		430		440	435	445 450	465	420CT		440CT	445CT 450CT		STD FLOW	HIGH FLOW	CASE DRAIN	FRONT ELEC	DEMO DOOR	2ND AUX
60" UTILITY SCRAP GRAPPLE	•	•													R					
66" UTILITY SCRAP GRAPPLE	•	•	•		•					•					R					
72" UTILITY SCRAP GRAPPLE		•	•	•	•	•				•					R					

FEATURES

- Includes hoses and quick disconnects
- Dual independent grapples
- Standard cylinder guards protect all cylinder components
- Standard load check valve for positive clamp force
- 1-1/4" cylinder pivot pins
- 1-1/4" x 24" grapple pins reduce torsional force
- 1/2" end plates
- Cushioned cylinders – 2" x 8" x 1-1/4"
- Bucket edge drilled for replaceable edge
- Throat opening grapple open – 34"
- Throat opening grapple closed – 19-3/4"
- Overall Depth – 36"

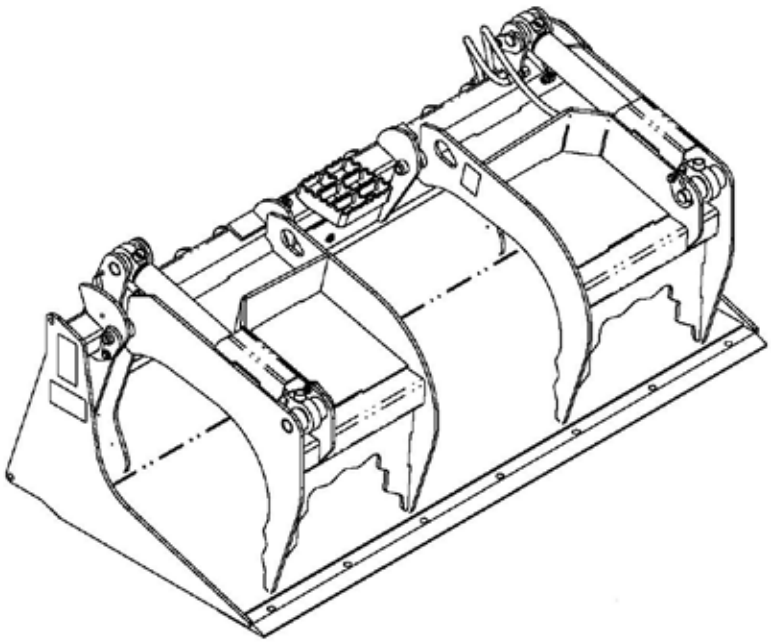

Accessories Available from CNH Industrial Parts	
Width	**Bolt-on Edge**
60"	86577165
66"	86577167
72"	86577169

HARLEY POWER BOX RAKE®

SKID STEER LOADERS/COMPACT TRACK LOADERS

Ex Works – Dexter, MI

BASE UNITS (includes: rake head, angling mounting frame, QDs and hoses)

STANDARD AUXILIARY BOOM HYDRAULICS REQUIRED	PART NUMBER	WEIGHT LB	PRICE
POWER BOX RAKE, 72" MANUAL ANGLE	84160162	1150	$9,346.00
POWER BOX RAKE, 72" HYDR ANGLE	84160163	1175	$10,279.00
POWER BOX RAKE, 84" MANUAL ANGLE	84160164	1350	$9,696.00
POWER BOX RAKE, 84" HYDR ANGLE	84160165	1400	$10,864.00
POWER BOX RAKE, 90" MANUAL ANGLE	84160166	1620	$10,514.00
POWER BOX RAKE, 90" HYDR ANGLE	84160167	1670	$11,681.00

ADDITIONAL COMPONENTS (Must order Electric Control Kit for hyd. angle units)

Electric Control Kit for loaders not equipped with factory Front Electric kit.	84372934	5	$188.00
Electric Control Kit for loaders equipped with new style Front Electric kit w/14 pin round connector	87023319	2	$234.00
Electric Control Kit for loaders equipped with previous XT-style Front Electric kit 305359A1 w/8 pin rectangular connector	87383458	2	$124.00

MODEL COMPATIBILTY	SR130 SR150 SR160	SR175 SV185	SR200 SR210	SR220		SV250 SR250	SV300		TR270			TR320 TV380	REQ'D EQUIPMENT					
	410	420	430	440	435	445 450	465	420CT		440CT	445CT 450CT		STD FLOW	HIGH FLOW	CASE DRAIN	FRONT ELEC	DEMO DOOR	2ND AUX
72" M6 HARLEY RAKE (MAN)	•	•	•	•	•	•		•	•	•			R					
72" M6 HARLEY RAKE (HYD)	•	•	•	•	•	•		•	•	•			R			O		
90" MX7 HARLEY RAKE (MAN)		•	•	•	•	•	•	•	•	•		•	R					
90" MX7 HARLEY RAKE (HYD)		•	•	•	•	•	•	•	•	•		•	R			O		
96" MX8 HARLEY RAKE (MAN)				•	•	•	•		•	•	•	•	R					
96" MX8 HARLEY RAKE (HYD)				•	•	•	•		•	•	•	•	R			O		

FEATURES

- Powered by standard skid steer auxiliary hydraulics
- Hydraulic motor drive
- Operates in forward and reverse
- Reversible end plates
- Adjustable dual gauge wheels
- Carbide tipped teeth
- Flat face hydraulic quick disconnects included
- Hoses included

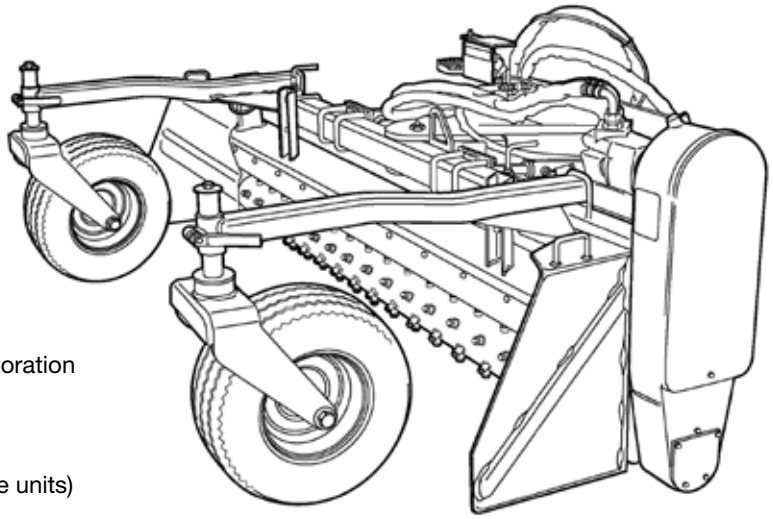

APPLICATIONS

- Ideal for seedbed preparation, landscaping, trench restoration

REQUIREMENTS FOR OPERATION

- Standard auxiliary hydraulics, 11 to 20 GPM
- Auxiliary front electric control kit (optional for hyd. angle units)

Ex Works – Willoughby, OH

BASE UNITS – COMPLETE (includes: hammer body, side plates, SSL mounting bracket, hoses, QDs and moil point)

	PART NUMBER	WEIGHT LB	PRICE
CH-2M HYDRAULIC HAMMER with single position mounting bracket	47450996	679	$7,425.00
CH-2M HYDRAULIC HAMMER with 3 position mounting bracket	47450997	699	$7,615.00
CH-3M HYDRAULIC HAMMER with single position mounting bracket	47450998	794	$9,300.00
CH-3M HYDRAULIC HAMMER with 3 position mounting bracket	47450999	814	$9,490.00
CH-4M HYDRAULIC HAMMER with single position mounting bracket	47451000	911	$10,300.00
CH-4M HYDRAULIC HAMMER with 3 position mounting bracket	47451002	931	$10,490.00
CH-5M HYDRAULIC HAMMER with single position mounting bracket	47451003	1128	$14,500.00

ADDITIONAL COMPONENTSfor CH-2M (Order as needed)

Moil Point (1 included with base hammer)	47451007	15	$195.00
Chisel Point	47451008	17	$195.00
Blunt Point	47451009	17	$195.00
Frost Wedge (2.0" wide)	47451010	22	$900.00
Asphalt Cutter (6" wide)	47451011	36	$950.00
Tamping pad (8" X 8")	47451012	43	$1,245.00

ADDITIONAL COMPONENTSfor CH-3M (Order as needed)

Moil Point (1 included with base hammer)	47451018	26	$325.00
Chisel Point	47451019	26	$325.00
Blunt Point	47451021	28	$325.00
Frost Wedge (2.3" wide)	47451022	39	$955.00
Asphalt Cutter (6" wide)	47451023	36	$980.00
Tamping pad (12" X 12")	47451024	119	$1,759.00

ADDITIONAL COMPONENTSfor CH-4M (Order as needed)

Moil Point (1 included with base hammer)	47451026	33	$400.00
Chisel Point	47451027	33	$400.00
Blunt Point	47451028	36	$400.00
Frost Wedge (2.5" wide)	47451029	42	$1,000.00
Asphalt Cutter (6" wide)	47451030	42	$1,040.00
Tamping pad (12" X 12")	47451031	126	$1,759.00

ADDITIONAL COMPONENTSfor CH-5M (Order as needed)

Moil Point (1 included with base hammer)	47451037	48	$450.00
Chisel Point	47451039	53	$450.00
Blunt Point	47451040	51	$450.00
Asphalt Cutter (6" wide)	47451041	71	$1,500.00
Tamping pad (12" X 12")	47451042	130	$1,995.00

HYDRAULIC HAMMERS

SKID STEER LOADERS/COMPACT TRACK LOADERS

Ex Works – Willoughby, OH

MODEL COMPATIBILTY	SR130	SR150 SR160	SR175 SV185	SR200 SR210	SR220		SV250 SR250	SV300		TR270			TR320 TV380	REQ'D EQUIPMENT					
		410	420	430	440	435	445 450	465	420CT		440CT	445CT 450CT		STD FLOW	HIGH FLOW	CASE DRAIN	FRONT ELEC	DEMO DOOR	2ND AUX
CH-2M HYDRAULIC HAMMER	•	•	•	•										R				R	
CH-3M HYDRAULIC HAMMER		•	•	•	•	•	•	•	•	•	•	•	•	R				R	
CH-4M HYDRAULIC HAMMER			•	•	•	•	•	•	•	•	•	•	•	R				R	
CH-5M HYDRAULIC HAMMER					•	•	•	•			•	•	•	R				R	

FEATURES

- 2 moving parts
- Low pressure gas charge
- Low recoil
- Low hydraulic surge
- Dual tool retainer pins
- Hoses and QDs included
- Moil Point included
- Gas recharge kit included
- Operation/Service Parts Manual
- 3 Year Warranty
- Uses standard auxiliary hydraulics

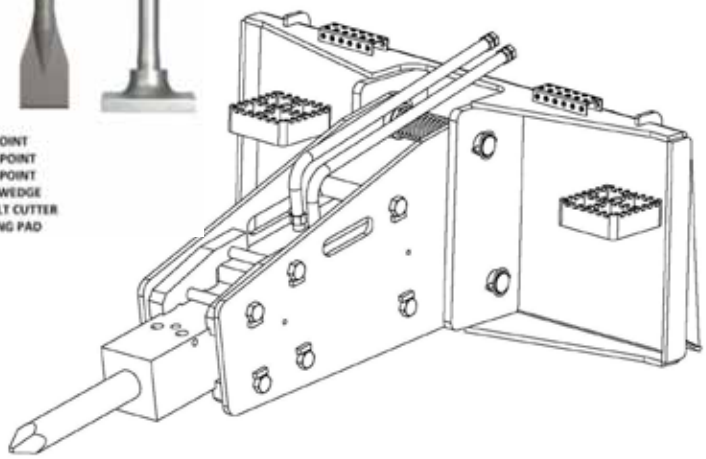

APPLICATIONS:

- Demolition, construction, road maintenance

REQUIREMENTS FOR OPERATION:

- Standard auxiliary hydraulics
- Demolition door

SPECIFICATIONS				
	CH-2M	CH-3M	CH-4M	CH-5M
Impact class (ft-lb)	250	350	550	825
Blows per min.	600-1150	550-1000	580-1060	550-1000
Operating wt. – lbs. (kg)	512-552 (232-250)	780-800 (354-363)	879-899 (399-408)	1076 (488)
Tool diam. – in. (mm)	2.0 (51)	2.3 (58)	2.5 (64)	3.0 (76)
Input flow – gpm (l/min)	5.3-9.2 (20-35)	6.6-12 (25-45)	8-14.5 (30-55)	9.2-16 (35-61)

HAMMER ORDERING GUIDE			
Mounting configuration		Hammer Model	Hammer Part. No.
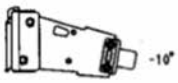	Single position mount bracket	CH-2M	47450996
		CH-3M	47450998
		CH-4M	47451000
		CH-5M	47451003
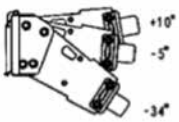	3 position mount bracket	CH-2M	47450997
		CH-3M	47450999
		CH-4M	47451002

LIFT BOOM

SKID STEER LOADERS/COMPACT TRACK LOADERS

Ex Works – Delhi, IA

	PART NUMBER	WEIGHT LB	PRICE
LIFT BOOM 6'	87381819	400	$1,344.00

MODEL COMPATIBILTY	SR130 SR150 SR160	SR175 SV185	SR200 SR210	SR220		SV250 SR250	SV300		TR270			TR320 TV380	REQ'D EQUIPMENT					
	410	420	430	440	435	445 450	465	420CT		440CT	445CT 450CT		STD FLOW	HIGH FLOW	CASE DRAIN	FRONT ELEC	DEMO DOOR	2ND AUX
LIFT BOOM 6'	•	•	•	•	•	•	•	•	•	•	•	•						

FEATURES

- Ideal for moving trees/shrubs for transplanting
- Use to load and unload attachments, etc.
- Ideal for placing and removing concrete forms
- OD Width: 47"
- Loading Depth: 25.1"
- Depth: 31"
- Overall height: 73.2"
- Reach: 83.1"
- Adds 6.5 ft additional reach to loader

Vertical Mast

(70% of Operating Load, not to exceed 6,000 pounds)

Maximum Reach

(30% of Operating Load, not to exceed 6,000 pounds)

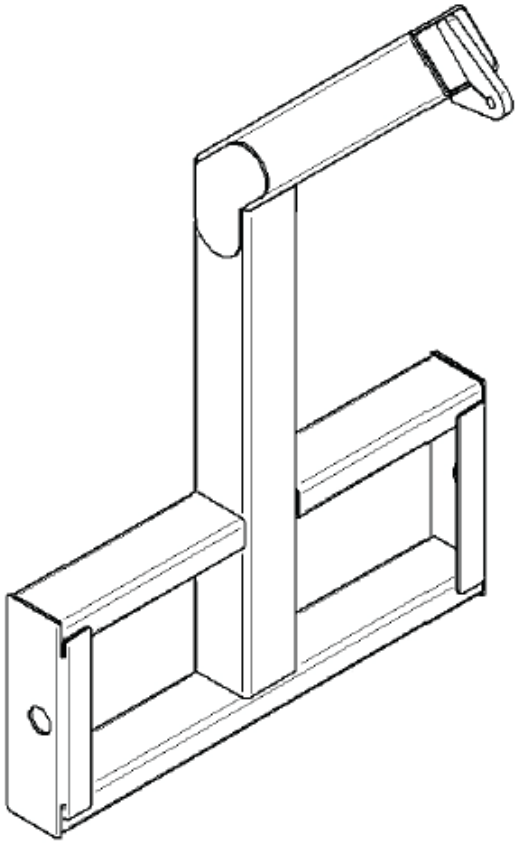

LOAD MONITORS

SKID STEER LOADERS/COMPACT TRACK LOADERS

Ex Works – Lincoln, NE

	PART NUMBER	WEIGHT LB	PRICE
WEIGHLOG 100 LOAD MONITOR (XT, 400 Series)	84316807	12	$2,652.00
WEIGHLOG 200 LOAD MONITOR (XT, 400 Series)	84316808	14	$3,686.00
WEIGHLOG 100 LOAD MONITOR (Alpha Series)	84512810	12	$2,768.00
WEIGHLOG 200 LOAD MONITOR (Alpha Series)	84512811	14	$3,807.00

ADDITIONAL EQUIPMENT (Order as needed)

PRINTER KIT - for WEIGHLOG 200 Only	84316810	1	$1,069.00

MODEL COMPATIBILTY	410 420	430 440	435 445	450 465	420CT 440CT	445CT 450CT	SR130 SR150 SR160	SR175 SV185	SR200 SR210 SR220	SV250 SR250	SV300	TR270	TR320 TV380
WEIGHLOG 100 - 84316807	•	•	•	•	•	•							
WEIGHLOG 200 - 84316808	•	•	•	•	•	•							
WEIGHLOG 100 - 84512810							•	•	•	•	•	•	•
WEIGHLOG 200 - 84512811							•	•	•	•	•	•	•

FEATURES

- Static or dynamic weighing
- 5 individual display channels
- Proven sensor technology
- Backlit LCD graphic display and keypad
- Measures, displays and records net weight based on lift system pressure
- Calibrate for any bucket, pallet fork, etc.
- Internal audible alarm
- Kit comes complete with:
  - Head unit
  - Heavy duty load sensor
  - Hydraulic fitting kit
  - Reference/direction sensors
  - Remote enter button
  - nstallation kit
- WeighLog is not certified for legal sale of goods

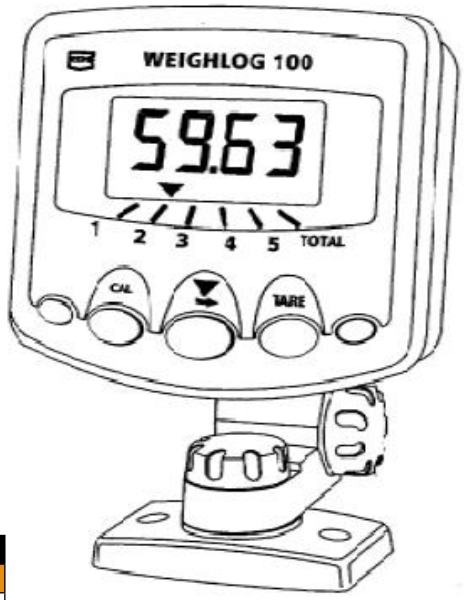

SPECIFICATIONS		
MODEL	WL100	WL200
Operating Voltage	11 - 30 vdc	
Temperature Range	32°-102° (0°-50°C)	
System Accuracy	±2% (or better)	
Pressure Range	0-4350 psi (0-250bar)	
Speed Compensated Dynamic Weighing	No	Yes
Printer Compatible	No	Yes
Warranty	1 year/parts	

MANURE FORKS & MANURE FORKS WITH GRAPPLE

SKID STEER LOADERS/COMPACT TRACK LOADERS

Ex Works – Delhi, IA

STANDARD AUXILIARY BOOM HYDRAULICS REQUIRED (for Grapple Option Only)	PART NUMBER	WEIGHT LB	PRICE
MANURE FORK, 60"	84218741	500	$1,628.00
MANURE FORK, 66"	84218742	515	$1,745.00
MANURE FORK, 72"	84218743	525	$1,793.00
MANURE FORK, 84"	84218744	575	$2,393.00

OPTIONS

Kit, Grapple Attachment (requires standard auxiliary hydraulics)	84218745	130	$1,704.00

MODEL COMPATIBILTY	SR130 SR150 SR160	SR175	SV185	SR200 SR210	SR220		SV250 SR250	SV300		TR270			TR320 TV380	REQ'D EQUIPMENT					
	410	420		430	440	435	445 450	465	420CT		440CT	445CT 450CT		STD FLOW	HIGH FLOW	CASE DRAIN	FRONT ELEC	DEMO DOOR	2ND AUX
60" MANURE FORK	•	•												O					
66" MANURE FORK	•	•	•	•	•	•	•	•	•	•	•			O					
72" MANURE FORK		•	•	•	•	•	•	•	•	•	•	•	•	O					
84" MANURE FORK					•	•	•	•		•	•	•	•	O					

FEATURES

- All standard fork attachments are grapple-ready
- Heavy duty forged tines
- Single, heavy duty cylinder for grapple option
- Overall depth – 30"
- Grapple opening – 37"
- Overall height – 25"

APPLICATIONS

- Moves loose hay and manure
- Clean-up and transport branches, brush and limbs

REQUIREMENTS FOR OPERATION

- Standard auxiliary hydraulics for optional grapple

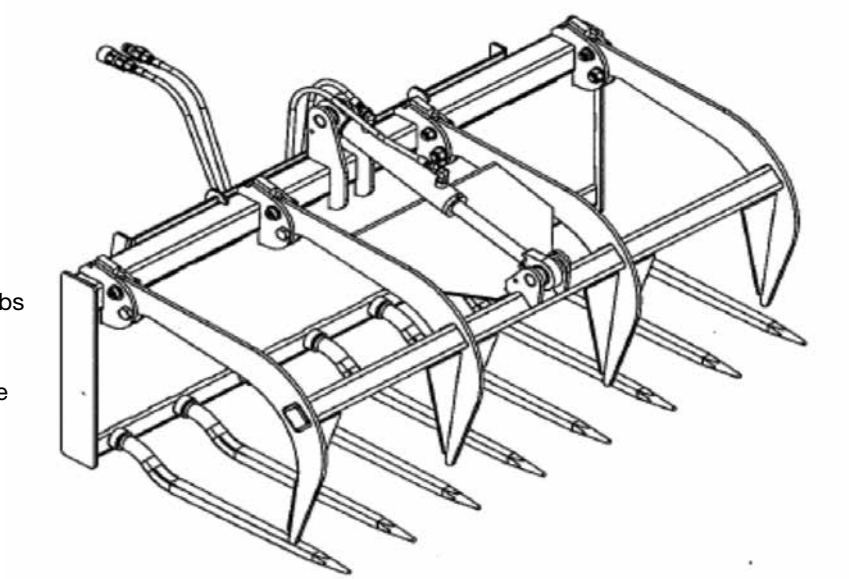

MANURE SCRAPERS

SKID STEER LOADERS/COMPACT TRACK LOADERS

Ex Works – Delhi, IA

	PART NUMBER	WEIGHT LB	PRICE
MANURE SCRAPER, 60"	84225459	376	$1,113.00
MANURE SCRAPER, 72"	84225460	413	$1,157.00
MANURE SCRAPER, 84"	84225461	472	$1,245.00
MANURE SCRAPER, 96"	84225462	508	$1,314.00

MODEL COMPATIBILTY	SR130 SR150 SR160		SR175 SV185	SR200 SR210	SR220		SV250 SR250	SV300		TR270			TR320 TV380	REQ'D EQUIPMENT					
	410	420		430	440	435	445 450	465	420CT		440CT	445CT 450CT		STD FLOW	HIGH FLOW	CASE DRAIN	FRONT ELEC	DEMO DOOR	2ND AUX
60" MANURE SCRAPER	•	•																	
72" MANURE SCRAPER	•	•	•	•	•	•	•	•	•	•	•								
84" MANURE SCRAPER		•	•	•	•	•	•	•	•	•	•	•	•						
96" MANURE SCRAPER					•	•	•	•		•	•	•	•						

FEATURES

- 30" overall height, 31" overall depth
- 1" x 6" reversible rubber edge
- Tapered end blades for improved visibility

APPLICATIONS

- Feedlot clean-up
- Flood clean-up
- Waste water clean-up
- Snow removal

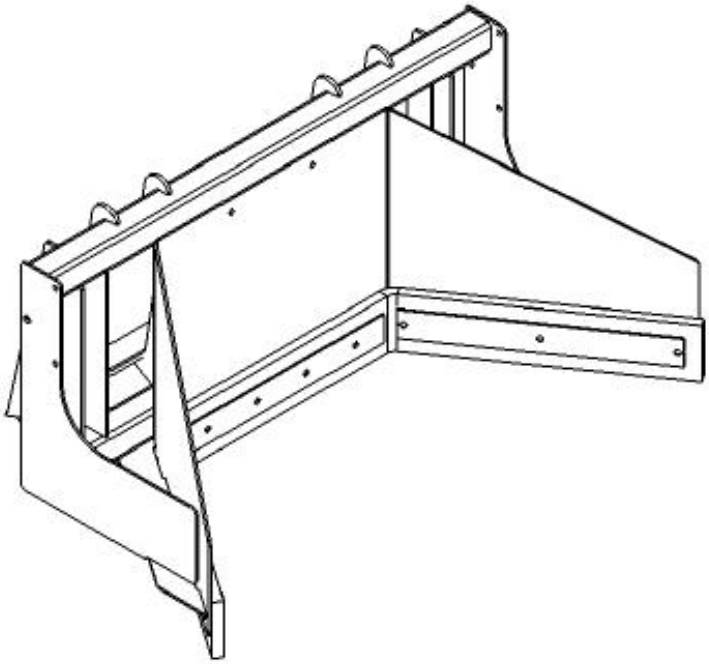

MULCHERS

SKID STEER LOADERS/COMPACT TRACK LOADERS

Ex Works – Delhi, IA

Mulcher complete with head, teeth, mounting bracket, wire harness, hoses and quick coupler.

	PART NUMBER	WEIGHT LB	PRICE
MULCHER - MM60 with double carbide teeth	84523771	2560	$32,637.00
MULCHER - MM60 with double claw teeth	84554134	2560	$29,069.00

Replacement Tooth Sets

Set Single Edge Carbide Teeth, non-reversible	84554177	140	$4,169.00
Set Double Edge Carbide Teeth	84553733	140	$5,732.00
Set Double Edge Claw Teeth	84553734	146	$1,251.00

MODEL COMPATIBILTY	SR130 SR150 SR160	SR175 SV185	SR200 SR210	SR220		SV250	SR250	SV300			TR270	TR320 TV380	REQ'D EQUIPMENT						
	410 420		430 440	435 445	450 465				420CT 440CT	445CT 450CT			STD FLOW	HIGH FLOW	EHF	CASE DRAIN	FRONT ELEC	DEMO DOOR	2ND AUX
60" CUTTER/MULCHER							•	•				•	R		R	R	R	R	

TOOTH OPTIONS

- Carbide teeth are general purpose use and provide longer life. Best applications are in full land clearing situations in which all vegetation must be reduced to or below grade.
- Claw teeth provide high productivity and smaller chip size in applications that do not require reduction of tree stumps/ woody stubs at or below grade. Best use is in right-of-way and other maintenance applications.
- Both carbide and claw teeth are available in double-sided (reversible) sets for extended life.
- Carbide teeth are available in single (non-reversible) configuration for lower repalcement cost.

FEATURES

- Low profile design weighing 2,560 lbs.
- Includes hydraulic front deflector door and hydraulic pressure sight gauge
- 44 cutting hammers on the rotors can be changed with impact wrench in less than 45 minutes
- Rotor operates at 2,000 rpm and has four second recovery time from dead stall stop

APPLICATIONS

- Land clearing
- Right-of-way maintenance
- Vegetation management
- Wildfire prevention
- Mulch trees and brush to ground level

REQUIREMENTS FOR OPERATION

- EHF High Flow
- Front Electric Control Kit
- Case drain
- Demolition door

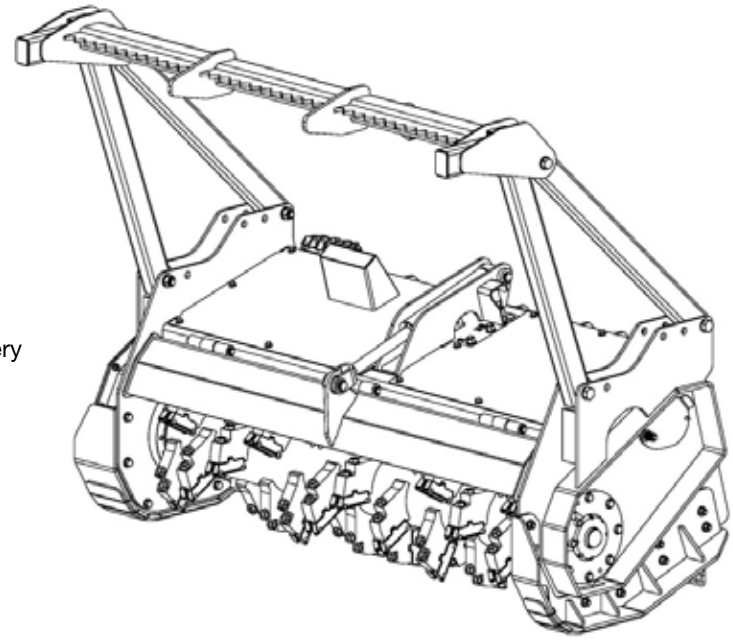

Ex Works – Brownsville, TX

	PART NUMBER	WEIGHT LB	PRICE
PALLET FORKS (ROPS) with 42" Standard Tines	84354438	398	$1,025.00
PALLET FORKS (ROPS) with 42" Standard Tines, Qty. of 6	84354438S6	398	$1,025.00
PALLET FORKS (ROPS) with 48" Standard Tines	84354439	416	$1,060.00
PALLET FORKS (ROPS) with 48" Standard Tines, Qty. of 6	84354439S6	416	$1,060.00
PALLET FORKS (ROPS) with 42"HD Tines	84332180	416	$1,080.00
PALLET FORKS (ROPS) with 42" HD Tines, Qty. of 6	84332180S6	416	$1,080.00
PALLET FORKS (ROPS) with 48" HD Tines	84332181	446	$1,130.00
PALLET FORKS (ROPS) with 48"HD Tines, Qty. of 6	84332181S6	446	$1,130.00
PALLET FORKS (CDE) with 42" Standard Tines	47403639	441	$1,025.00
PALLET FORKS (CDE) with 42" Standard Tines, Qty. of 6	47403639S6	441	$1,025.00
PALLET FORKS (CDE) with 48" Standard Tines	47403640	459	$1,060.00
PALLET FORKS (CDE) with 48" Standard Tines, Qty. of 6	47403640S6	459	$1,060.00
PALLET FORKS (CDE) with 42"HD Tines	47403644	452	$1,080.00
PALLET FORKS (CDE) with 42" HD Tines, Qty. of 6	47403644S6	452	$1,080.00
PALLET FORKS (CDE) with 48" HD Tines	47403646	511	$1,130.00
PALLET FORKS (CDE) with 48"HD Tines, Qty. of 6	47403646S6	511	$1,130.00

ADDITIONAL EQUIPMENT (Order as needed)

PALLET FORK (ROPS), Frame Only	84348693	222	$632.00
PALLET FORK (ROPS), Frame Only, Qty of 6	84348693S6	222	$632.00
PALLET FORK (CDE), Frame Only	47403634	260	$632.00
PALLET FORK (CDE), Frame Only, Qty of 6	47403634S6	260	$632.00
42" STD TINE SET (includes 2 tines)	84354440	176	$429.00
42" STD TINE SET (includes 2 tines), Qty of 6	84354440S6	176	$429.00
48" STD TINE SET (includes 2 tines)	84354441	194	$440.00
48" STD TINE SET (includes 2 tines), Qty of 6	84354441S6	194	$440.00
42" HD TINE SET (includes 2 tines)	84332183	194	$448.00
42" HD TINE SET (includes 2 tines), Qty of 6	84332183S6	194	$448.00
48" HD TINE SET (includes 2 tines)	84332184	234	$587.00
48" HD TINE SET (includes 2 tines), Qty of 6	84332184S6	234	$587.00

* Prices shown are list prices per unit/set.

PALLET FORKS

SKID STEER LOADERS/COMPACT TRACK LOADERS

Ex Works – Brownsville, TX

MODEL COMPATIBILTY	SR130 SR150 SR160	SR175 SV185	SR200 SR210	SR220		SV250 SR250	SV300		TR270			TR320 TV380	REQ'D EQUIPMENT					
	410	420	430	440	435	445 450	465	420CT		440CT	445CT 450CT		STD FLOW	HIGH FLOW	CASE DRAIN	FRONT ELEC	DEMO DOOR	2ND AUX
PALLET FORKS - 42" STD	•	•	•	•	•	•												
PALLET FORKS - 48" STD	•	•	•	•	•	•												
PALLET FORKS - 42" HD	•	•	•	•	•	•	•	•	•	•	•	•						
PALLET FORKS - 48" HD	•	•	•	•	•	•	•	•	•	•	•	•						

FEATURES

- Heat-treated tines, manually adjustable
- Locking position pins
- High visibility back guard
- Steps for easy entry to cab
- ROPS Frame:
  - Original design
  - Close-coupled frame
  - High lift capacity
  - Backguard contact with fully open cab door on some models
- CDE Frame:
  - Revised, frame forward design
  - No backguard contact with fully open cab door) (except SR130/SR150/SR160)

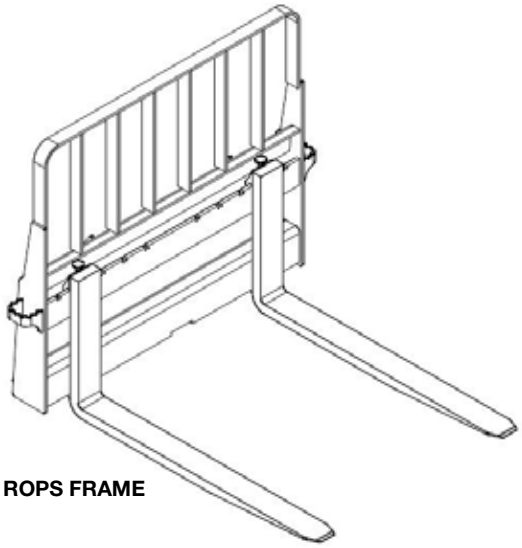

ROPS FRAME

Heavy Duty Tines

- 42" Tines - 1-1/2" x 4" cross-section
- 48" Tines - 1-3/4" x 4" cross-section
- 5500#/pair ITA Class II rated tines

Standard Tines

- 42" Tines - 1-3/8" x 4" cross-section
- 48" Tines - 1-3/8" x 4" cross-section
- 4000#/pair rated tines

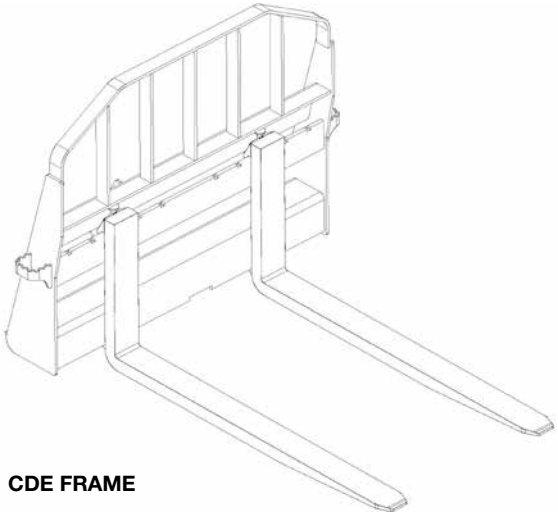

CDE FRAME

APPLICATIONS

- Handling pallets and construction materials

POST DRIVER

SKID STEER LOADERS/COMPACT TRACK LOADERS

Ex Works – Delhi, IA

	PART NUMBER	WEIGHT LB	PRICE
POST DRIVER - MODEL PD4800	84258061	1385	$6,615.00
COMPLETING KITS (Must select one for complete unit)			
Square collar and striker plate assy 3.5"	84258062	63	$767.00
Square collar and striker plate assy 6"	84258063	65	$767.00
Square collar and striker plate assy 8"	84258064	66	$895.00
Collar and striker plate assy 6" X 8"	84258065	64	$767.00
OPTIONAL EQUIPMENT (Order as needed)			
Round collar, 3"	84258066	15	$330.00
Square collar, 3.5"	84258067	15	$330.00
Round collar, 4"	84258068	15	$330.00
H beam collar 4" X 6"	84258070	15	$330.00
Round collar, 6"	84258071	15	$330.00
Square collar, 6"	84258073	15	$330.00
Square collar, 8"	84258074	15	$330.00
Collar, 6" X 8"	84258076	15	$330.00
T post adapter (use w/ 6" round or 6" square collar)	84258078	15	$154.00

MODEL COMPATIBILTY	SR130 SR150 SR160	SR175 SV185	SR200 SR210	SR220		SV250 SR250	SV300		TR270			TR320 TV380	REQ'D EQUIPMENT					
	410	420	430	440	435	445 450	465	420CT		440CT	445CT 450CT		STD FLOW	HIGH FLOW	CASE DRAIN	FRONT ELEC	DEMO DOOR	2ND AUX
POST DRIVER		•	•	•	•	•	•	•	•	•	•	•	R					

FEATURES

- May be used with Tilt-Attach
- Manual side shift
- 24 gpm maximum flow
- Quick change striker plate and collar assemblies
- Designed for smooth operation with no shock load back to the skid steer

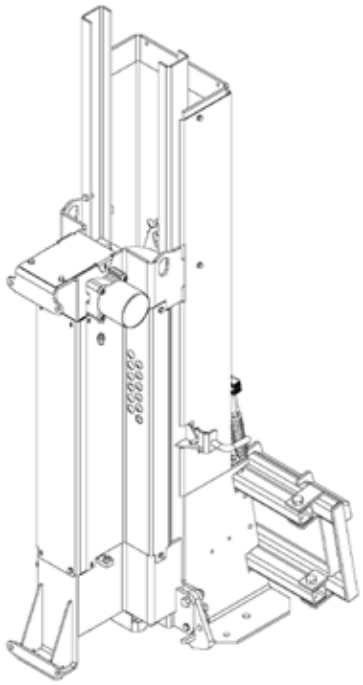

REQUIREMENTS FOR OPERATION

- Standard auxiliary hydraulics

SPECIFICATIONS	
Length	38.69"
Width	54.25"
Height	91.48"
Maximum stroke	48"
Weight (lbs)	1,360
Hammer weight, standard (lbs)	289
Maximum hammer wt (lbs)	600
Strokes per minute	42
Minimum hydraulic pressure	2000 psi
Maximum flow	24 gpm
Impact energy w/289 lb wt	1,156 ft-lb
Impact energy w/600 lb wt	2,400 ft-lb

PREPARATOR® LANDSCAPE RAKE

SKID STEER LOADERS/COMPACT TRACK LOADERS

Ex Works – Dexter, MI

Packages include complete unit with mounting plate, hoses and quick couplers.

REQUIRES STANDARD AUXILIARY BOOM HYDRAULICS	PART NUMBER	WEIGHT LB	PRICE
PREPARATOR® LANDSCAPER GRADER RAKE, 66"	446019A1	1270	$9,261.00
PREPARATOR® LANDSCAPER GRADER RAKE, 76"	446020A1	1465	$9,772.00

MODEL COMPATIBILTY	SR130 SR150 SR160	SR175 SV185		SR200 SR210	SR220		SV250 SR250	SV300		TR270			TR320 TV380	REQ'D EQUIPMENT					
	410 420		430		440	435	445 450	465	420CT		440CT	445CT 450CT		STD FLOW	HIGH FLOW	CASE DRAIN	FRONT ELEC	DEMO DOOR	2ND AUX
PREPARATOR - 66"	•	•	•	•	•	•			•	•				R					
PREPARATOR - 76"		•	•	•	•	•	•	•	•	•	•	•	•	R					

FEATURES

- Conditions the soil with scarifying action while picking up debris.
- Picks up rocks from 1" to 20" diameter.
- An all-in-one landscaping tool; levels out ridges and ruts; cuts out grass that needs reseeding; prepares soil for planting.
- Ruggedly built to withstand constant use.
- Flat face hydraulic quick disconnects included
- Hydraulic hoses included
- Standard auxiliary hydraulics 10-25 gpm required

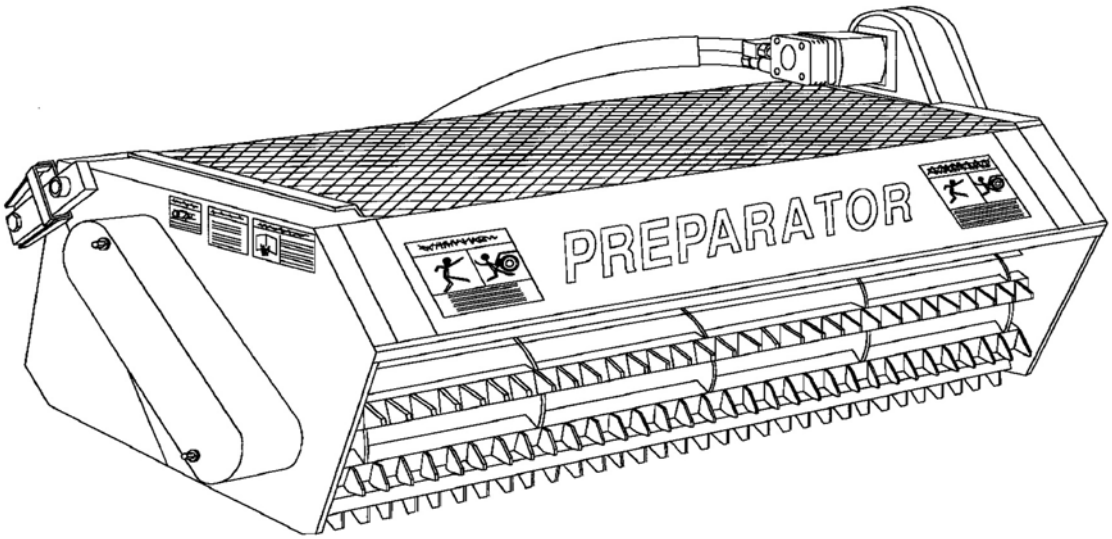

Preparator Landscape Grader Rake (Continued next page)

PREPARATOR® LANDSCAPE RAKE

SKID STEER LOADERS/COMPACT TRACK LOADERS

Ex Works – Dexter, MI

SPECIFICATIONS		
MODEL	**PREPARATOR 66"**	**PREPARATOR 76"**
BUCKET		
Capacity	10.32 ft3 (0.29m3)	12.50 ft3 (0.35m3)
Overall Width	74.75 in. (190 cm)	84.75 in. (215 cm)
Swath Width	66.0 in. (168 cm)	76.0 in. (193 cm)
Overall Height	25.53 in. (65 cm)	25.53 in. (65 cm)
Overall Length	60.13 in. (153 cm)	60.13 in. (153 cm)
DRUM		
RPM-r/min	0 - 86	0 - 86
Overall Diameter	12.5 in. (54.6 cm)	21.5 in. (54.6 cm)
Rake Bar (square steel tubing)	2 in. x 2 in. (50.8 x 50.8 mm)	2 in. x 2 in. (50.8 x 50.8 mm)
Teeth	T-1 Steel	T-1 Steel
Tooth Thickness	0.19 in. (4.82 mm)	0.19 in. (4.82 mm)
Tooth Length	2.19 in. (55.6 mm)	2.19 in. (55.6 mm)
Number of Teeth	310	350
HYDRAULIC MOTOR		
Operating RPM Range	10 - 18 gpm (38 - 61 L/min) @ 2300 psi (15 858 kPa)	10 - 18 gpm (38 - 61 L/min @ 2300 psi (15 858 kPA)
Horsepower	12 - 23 (8.9 - 17.1 kW)	12 - 23 (8.9 - 17.1 kW)
Torque	11,701 lb-in (1322 N-m)	11,701 lb-in (1322 N-m)
DRIVE CHAINS		
Rake Drive	#80H Roller Chain	#80H Roller Chain
Brush Drive	#50H Roller Chain	#50H Roller Chain
Overall Weight	1,270 lb (576 kg)	1,465 lb (664 kg)

REAR STABILIZER

SKID STEER LOADERS/COMPACT TRACK LOADERS

Ex Works – Delhi, IA

Base stabilizer packages include rear stabilizers (less pads) and mounting brackets. Hydraulic kits required as indicated.

REQUIRES STANDARD AUXILIARY BOOM HYDRAULICS	PART NUMBER	WEIGHT LB	PRICE
REAR STABILIZER PACKAGE (includes hyd kit)	87053912	375	$2,541.00
REAR STABILIZER PACKAGE (includes hyd kit)	87053913	391	$2,652.00
REAR STABILIZER PACKAGE (includes hyd kit)	87373393	405	$2,986.00
REAR STABILIZER PACKAGE (requires hyd kit)	84518504	460	$2,658.00
REAR STABILIZER PACKAGE (requires hyd kit)	84518505	480	$2,689.00

ADDITIONAL COMPONENTS (Must order hydraulic kit as indicated and pad kit for complete unit.)

HYDRAULIC KIT - FOR USE W/ATTACHMENT VALVE (SR175, SR200, SR210, SR220, TR270, TR320)	84518506	20	$335.00
HYDRAULIC KIT - FOR USE W/2ND AUX KIT (SR175, SR200, SR210, SR220, SR250, TR270, TR320)	84546390	20	$261.00
HYDRAULIC KIT - FOR USE W/ATTACHMENT VALVE (SV185, SV250, SV300, TV380)	84518507	25	$385.00
HYDRAULIC KIT - FOR USE W/2ND AUX KIT (SV185, SV250, SV300, TV380)	84546391	25	$298.00
GROUSER PAD SET	87053914	40	$178.00
FLAT PAD SET	86590028	39	$226.00

MODEL COMPATIBILTY	410 420	430 440	435 445	450	465	420CT 440CT	445CT	450CT	SR130 SR150 SR160	SR175	SV185	SR200 SR210	SR220	SV250	SR250	SV300	TR270	TR320	TV380	REQ'D EQUIP STD FLOW	REQ'D EQUIP 2ND AUX
REAR STABILIZER - 87053912	•	•				•														R	O
REAR STABILIZER - 87053913			•		•		•													R	O
REAR STABILIZER - 87373393				•				•												R	O
REAR STABILIZER - 84518504										•	•	•					•			R	O
REAR STABILIZER - 84518505													•	•	•	•		•	•	R	O
HYDRAULIC KIT - 84518506										•		•	•		•		•	•			
HYDRAULIC KIT - 84546390										•		•	•		•		•	•			R
HYDRAULIC KIT - 84518507											•			•		•			•		
HYDRAULIC KIT - 84546391											•			•		•			•		R

FEATURES

- Use with tree spades, backhoes, etc.

REQUIREMENTS FOR OPERATION

- 2nd auxiliary or attachment valve with extra auxiliary hydraulic function

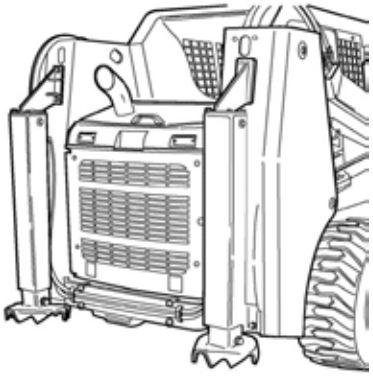

400 Series

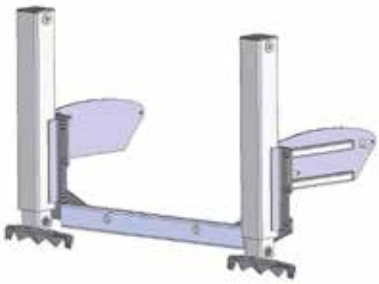

Alpha Series

ROCK BUCKETS

SKID STEER LOADERS/COMPACT TRACK LOADERS

Ex Works – Delhi, IA

REQUIRES STANDARD AUXILIARY BOOM HYDRAULICS	PART NUMBER	WEIGHT LB	PRICE
ROCK BUCKET 66", 3" tine spacing	87381975	555	$1,777.00
ROCK BUCKET 66", 2" tine spacing	87381976	680	$1,961.00
ROCK BUCKET 75", 3" tine spacing	87381977	625	$1,930.00
ROCK BUCKET 75", 2" tine spacing	87381978	680	$2,036.00
ROCK BUCKET 84", 3" tine spacing	87381979	792	$2,041.00

OPTIONAL EQUIPMENT

Grapple attachment for 75" and 84" Rock Buckets (Not compatible with CWL HD buckets)	87389692	490	$2,445.00

MODEL COMPATIBILTY	SR130 SR150 SR160	SR175 SV185	SR200 SR210		SR220		SV250 SR250	SV300		TR270			TR320 TV380	REQ'D EQUIPMENT					
	410	420	430	440		435	445 450	465	420CT		440CT	445CT 450CT		STD FLOW	HIGH FLOW	CASE DRAIN	FRONT ELEC	DEMO DOOR	2ND AUX
66" ROCK BUCKET	•	•	•	•					•	•									
75" ROCK BUCKET		•	•	•	•	•	•	•	•	•	•	•	•	O					
84" ROCK BUCKET					•	•	•	•				•	•	O					

FEATURES

- Designed to hold the collected rocks and debris while leaving the soil
- Tine spacing determines the size of rocks and debris that will be retained while allowing the soil to sift back to the ground.
- 2" tine spacing keep bricks in the bucket for easier clean up around job sites.
- The rake design is used to gather material away from buildings and obstructions, for faster clean up of debris, to level out clumps of dirt and pick-up pieces of sod.
- Rake - Pile - Load debris from construction sites, pastures, fields, etc.

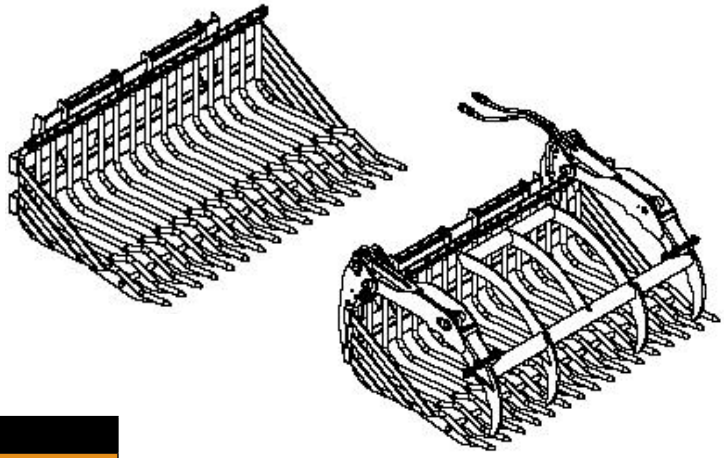

SPECIFICATIONS			
DESCRIPTION	66"	75"	84"
A. Overall Width	65.9"	74.4"	82.9"
B. Overall Depth	49.8"	49.8"	49.8"
C. Overall Height	21.8"	21.8"	21.8"
D. Tine Spacing			
(center to center)	4.25" or 3.15"	4.25" or 3.15"	4.25" or 3.15"
(between tines)	3.1" or 2"	3.1" or 2"	3.1"
Number of Tines	16 or 21	18 or 24	20
Tine Rod Diameter	1.1"	1.1"	1.1"

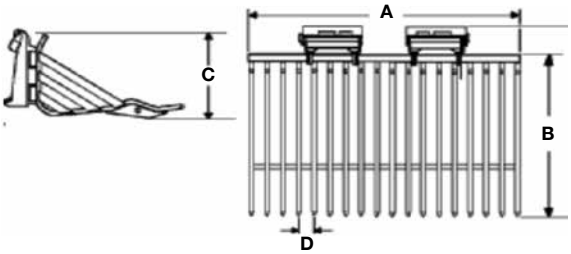

Ex Works – Delhi, IA

Rock wheel packages include drum, hydraulic depth and sideshift, hoses and quick couplers.
Must select drum pick kit for required width.

* HIGH FLOW AUXILIARY BOOM HYDRAULICS, CASE DRAIN PLUMBING AND AUXILIARY FRONT ELECTRIC CONTROL KIT REQUIRED	PART NUMBER	WEIGHT LB	PRICE
ROCK SAW, RS18, 18"	87523116	1775	$18,739.00
ROCK SAW, RS 24, 24"	87523117	2095	$20,011.00
EHF ROCK SAW, RS18, 18"	84523784	1775	$19,323.00
EHF ROCK SAW, RS24, 24"	84523785	2095	$20,585.00

ADDITIONAL COMPONENTS (Must Select One for Complete Unit)

2.5" drum/pick kit for RS18	87523118	220	$1,982.00
4" drum/pick kit for RS18	87523119	245	$2,025.00
2.5" drum/pick kit for RS24	87523120	290	$2,638.00
4" drum/pick kit for RS24	87523121	325	$2,689.00

ADDITIONAL COMPONENTS (Order as needed)

Wire harness adapter (adapts pre-9/1/2001 75XT, 85XT, 90XT, 95XT w/8-pin connector to 14-pin connector)	87048529	182	$151.00

MODEL COMPATIBILTY	SR130 SR150 SR160		SR175 SV185		SR200 SR210	SR220	SV250		SR250	SV300			TR270		TR320 TV380	REQ'D EQUIPMENT						
	410	420		430		440 435	445 450	465			420CT	440CT		445CT 450CT		STD FLOW	HIGH FLOW	EHF	CASE DRAIN	FRONT ELEC	DEMO DOOR	2ND AUX
ROCK SAW, RS18, 18						•	•	•	•	•		•		•	•		R		R	R		
ROCK SAW, RS 24, 24							•	•	•	•				•	•		R		R	R		
EHF ROCK SAW, RS18, 18									•	•					•	R		R	R	R		
EHF ROCK SAW, RS24, 24									•	•					•	R		R	R	R		

FEATURES

- For slot cutting, utility cuts for gas, sewer, water, electrical and cable TV TV installation and repair, asphalt patch cuts, cuts to create expansion joints in roadways
- Planetary drive
- Convenient electro-hydraulic control for depth and sideshift
- Dual side discharge of material
- Pick removal tool included
- Available in 2.5" and 4" wheel widths
- 40-gallon Pressurized Water Kit available. See “Water Kits”

APPLICATIONS

- Slot cutting
- Utility cuts for gas, water, sewer, electrical and cable TV installation and repair
- Asphalt patch cuts
- Cuts to create expansion joints in roadways

REQUIREMENTS FOR OPERATION

- High flow auxiliary hydraulics (EHF for specified units)
- Front Electric Control Kit
- Case Drain

Rock Saw (Continued next page)

Ex Works – Delhi, IA

SPECIFICATIONS		
MODEL	**RS18**	**RS24**
Operating Weight - lb. (kg)	2020 (916)	2420 (1098)
Cutting Depth - in. (mm)	0-18 (0-457)	0-24 (0-610)
Cutting Width - in. (mm)	2.5 (64)/4 (102)	2.5 (64)/4 (102)
Drum Diameter - in. (mm)	48(1219)	60(1524)
Sideshift - in. (mm)	-3-22(-76-560) center to right	-3-22 (-76-560) center to right
Hydraulic requirement - gpm (l/m)	30-40 (114-151)	35-40 (132-151)
Hydraulic requirement - psi (bar)	2500-3500 (172-241)	2500-3500 (172-241)
EHF Units Hydraulic requirement - psi (bar)	4000 (275)	4000 (275)
Drive	Planetary	Planetary
Controls	Full hydraulic with in-cab controls	Full hydraulic with in-cab controls
No. of Carbide Picks	42	56

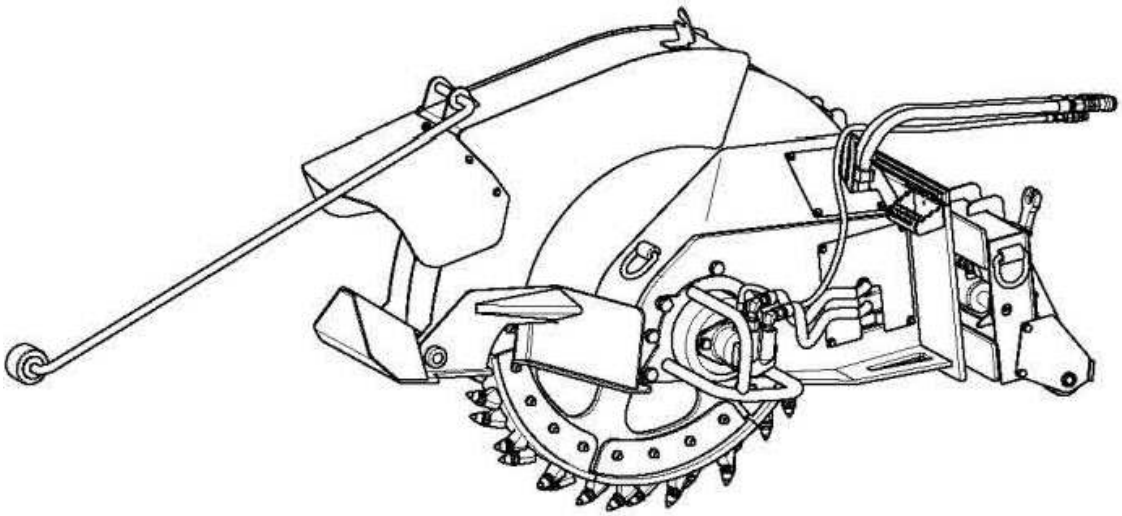

ROOT RAKE

SKID STEER LOADERS/COMPACT TRACK LOADERS

Ex Works – Delhi, IA

Root Rake includes skid steer mounting bracket, hoses and quick couplers.

REQUIRES STANDARD AUXILIARY BOOM HYDRAULICS	PART NUMBER	WEIGHT LB	PRICE
72" ROOT RAKE with grapple	87382368	1100	$5,557.00
78" ROOT RAKE with grapple	87389704	1150	$6,009.00
84" ROOT RAKE with grapple	87389705	1220	$6,379.00

MODEL COMPATIBILTY	SR130 SR150 SR160	SR175 SV185	SR200 SR210	SR220		SV250 SR250	SV300		TR270			TR320 TV380	REQ'D EQUIPMENT					
	410	420	430	440	435	445 450	465	420CT		440CT	445CT 450CT		STD FLOW	HIGH FLOW	CASE DRAIN	FRONT ELEC	DEMO DOOR	2ND AUX
72" ROOT RAKE		•	•	•	•	•	•	•	•	•			R					
78" ROOT RAKE			•	•	•	•	•	•	•			•	R					
84" ROOT RAKE					•	•	•				•	•	R					

FEATURES

- Rake - Pile - Load debris from construction sites, pastures, fields, storm damage, etc.
- Upper push-bar, aggressive profiles with H&L-230 style teeth work Together to neatly gather material into more manageable pile
- Zinc plated, greasable, pivot pins with protected grease zerks, and replaceable hardened steel bushings at all pivot locations
- Pilot operated check for positive lock clamping
- Weld-on D-ring for countless applications

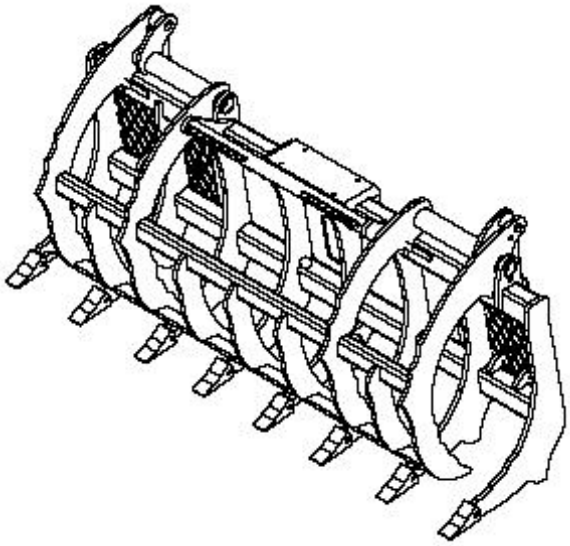

ROTARY CUTTER

SKID STEER LOADERS/COMPACT TRACK LOADERS

Ex Works – Delhi, IA

Base unit includes base mower, mounting frame, safety chain, quick disconnects and hoses.

REQUIRES STANDARD AUXILIARY BOOM HYDRAULICS	PART NUMBER	WEIGHT LB	PRICE
ROTARY CUTTER, 60" Std Flow (15 - 25 gpm)	47591786	1225	$6,199.00
ROTARY CUTTER, 72" Std Flow (15 - 25 gpm)	47591787	1375	$6,850.00
ROTARY CUTTER, 78" Std Flow (15 - 25 gpm)	47591788	1460	$6,850.00
ROTARY CUTTER, 72" High Flow (26 - 32 gpm)	47591789	1375	$7,250.00
ROTARY CUTTER, 72" High Flow (32 - 40 gpm)	47591790	1495	$7,250.00
ROTARY CUTTER, 78" High Flow (26 - 32 gpm)	47591791	1460	$7,859.00
ROTARY CUTTER, 78" High Flow (32 - 40 gpm)	47591792	1580	$7,859.00
ADDITIONAL EQUIPMENT (Order as needed)			
PRESSURE INDICATOR KIT - SF/26-32HF	47591794	10	$273.00
PRESSURE INDICATOR KIT - 32-40HF	47591795	10	$273.00
DUAL WHEEL KIT (UNDER DECK)	47591797	85	$801.00
WEAR SHOE REPLACEMENT KIT	47591801	15	$73.00
REPLACEMENT BLADE SETS			
REPLACEMENT BLADES - 60"	47591798	45	$287.00
REPLACEMENT BLADE S- 72"	47591799	50	$307.00
REPLACEMENT BLADE S- 78"	47591800	55	$357.00

MODEL COMPATIBILTY	SR130	SR150 SR160		SR175 SV185		SR200 SR210	SR220		SV250 SR250	SV300		TR270				TR320 TV380	REQ'D EQUIPMENT					
		410	420		430		440	435	445 450	465	420CT		440CT	445CT 450CT			STD FLOW	HIGH FLOW	CASE DRAIN	FRONT ELEC	DEMO DOOR	2ND AUX
60" ROTARY CUTTER (15-25) 47591786		•	•	•	•						•	•					R				R	
72" ROTARY CUTTER (15-25) 47591787			•	•	•	•	•	•	•	•	•	•	•	•	•		R				R	
78" ROTARY CUTTER (15-25) 47591788						•	•	•	•	•			•	•	•		R				R	
72" ROTARY CUTTER - HIGH FLOW (26-32) 47591789				•		•						•						R			R	
72" ROTARY CUTTER - HIGH FLOW (32-40) 47591790			•		•		•	•	•	•	•		•	•	•			R	R		R	
78" ROTARY CUTTER - HIGH FLOW (26-32) 47591791						•												R			R	
78" ROTARY CUTTER - HIGH FLOW (32-40) 47591792							•	•	•	•			•	•	•			R	R		R	

FEATURES

- Direct drive motor with options for 15 to 40 gpm with dual internal reliefs for drive system protection and fast, controlled shut down
- 3-blade carrier
- Double edged blades for bi-directional cutting
- Optional pressure gauge to help prevent excessive stalling and overheating
- Heavy-duty 1/4" high strength steel deck for added strength and rigidity
- Replaceable skid shoes
- Lift limiting safety chain
- Hoses and flat face hydraulic disconnects included

APPLICATIONS

- For small trees and brush up to 4" in diameter

REQUIREMENTS FOR OPERATION

- Demolition Door (must order separately from parts)
- Standard auxiliary hydraulics (as indicated)
- High flow auxiliary/case drain (as indicated)

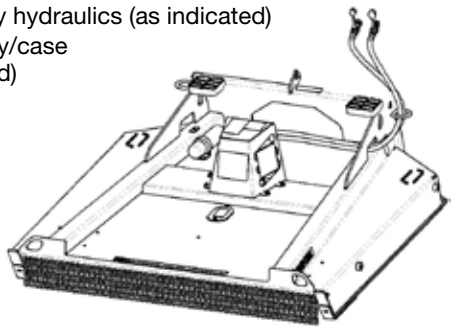

SILAGE DEFACER

SKID STEER LOADERS/COMPACT TRACK LOADERS

Ex Works – Delhi, IA

AUXILIARY BOOM HYDRAULICS REQUIRED – REAR COUNTERWEIGHTS RECOMMENDED	PART NUMBER	WEIGHT LB	PRICE
SILAGE DEFACER	87045796	940	$5,801.00

MODEL COMPATIBILTY	SR130 SR150 SR160	SR175 SV185	SR200 SR210	SR220		SV250 SR250	SV300		TR270			TR320 TV380	REQ'D EQUIPMENT					
	410	420	430	440	435	445 450	465	420CT		440CT	445CT 450CT		STD FLOW	HIGH FLOW	CASE DRAIN	FRONT ELEC	DEMO DOOR	2ND AUX
SILAGE DEFACER		•	•	•	•	•	•	•	•	•	•	•	R					

FEATURES

- 3-position, extendable frame. Working heights up to 19', depending on loader lift height, loader capacity and frame position
- Inverted auger style cutter loosens haylage and silage from tightly compacted bunker silos
- Maintains smooth compacted bunker face for reduced spoilage and improved palatability
- Does not reduce haylage stem length for optimum digestibility yielding higher milk production
- Open frame design allows the operator so see the bunker face
- 96" full width cut and inboard mounted drive motor allows defacer to operate closer to bunker walls
- Frame stands protect rotor when running or parked
- Cutter made from abrasion-resistant steel for long life
- Enclosed #80H chain drive with simple chain tension adjustment
- For skid-steers with 15-25 gpm hydraulic flow

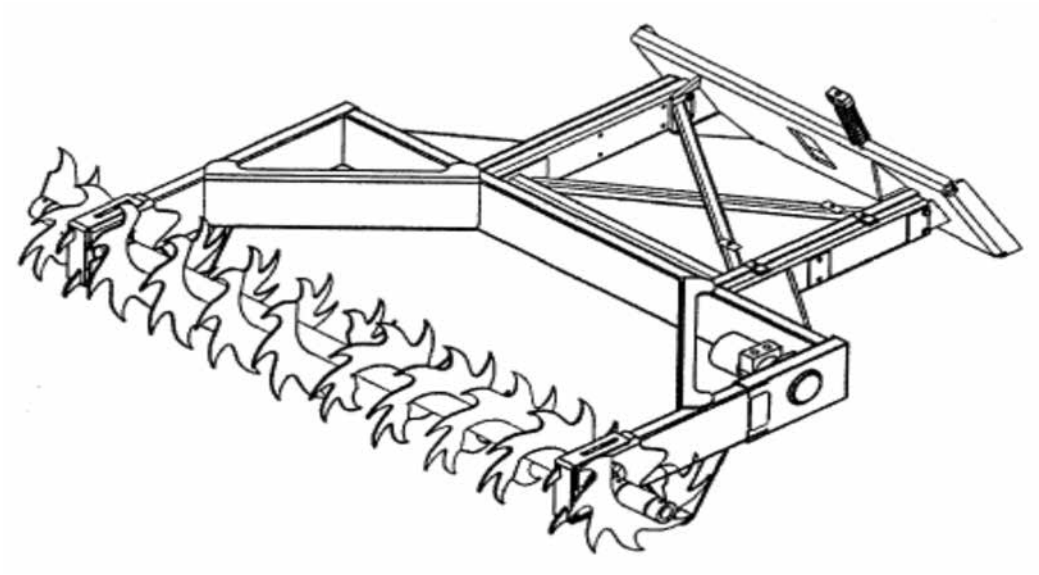

SILT FENCE INSTALLERS

SKID STEER LOADERS/COMPACT TRACK LOADERS

Ex Works – Gilman, IA

	PART NUMBER	WEIGHT LB	PRICE
SILT FENCE INSTALLER with integrated skid-steer mount	87596133	840	$6,489.00
SILT FENCE INSTALLER with 3-point mount (requires 87596137 for skid steer operation)	87596134	825	$6,489.00
SILT FENCE INSTALLER with 3 point mount and 72" sliding offset hitch (requires 87596137 for skid steer operation)	87596135	1260	$7,811.00
SILT FENCE INSTALLER with 3 point mount and 84" sliding offset hitch (requires 87596137 for skid steer operation)	87596136	1315	$7,811.00

BASE UNIT OPTIONS (Order as Needed)

Skid-steer adapter bracket for 3-point mount models used on skid-steers	87596137	255	$746.00
Hydraulic top link kit for 3-point mount models used on tractors	87596138	35	$355.00

MODEL COMPATIBILTY	SR130	SR150 SR160	SR175 SV185	SR200 SR210	SR220		SV250 SR250	SV300		TR270			TR320 TV380	REQ'D EQUIPMENT					
		410	420	430	440	435	445 450	465	420CT		440CT	445CT 450CT		STD FLOW	HIGH FLOW	CASE DRAIN	FRONT ELEC	DEMO DOOR	2ND AUX
SILT FENCE INSTALLER – SSL	•	•	•	•	•	•	•	•	•	•	•	•	•						
SILT FENCE INSTALLER – 3-PT HITCH		•	•	•	•	•	•	•	•	•	•	•	•						
SILT FENCE INSTALLER – 3-PT HITCH 72" OFFSET					•	•	•	•		•	•	•	•						
SILT FENCE INSTALLER – 3-PT HITCH 84" OFFSET					•	•	•	•		•	•	•	•						

FEATURES

- Simple, economical, efficient silt fence installation
- Install 36", 42" or 48" standard fence
- Place fence up to 20" depth
- Skid-steer or 3-point models (skid-steer adapter available for 3-point models)
- Spring-loaded coulter cuts through trash, roots and sod
- Static blade, no hydraulics required

APPLICATIONS

- Install silt fence around job sites

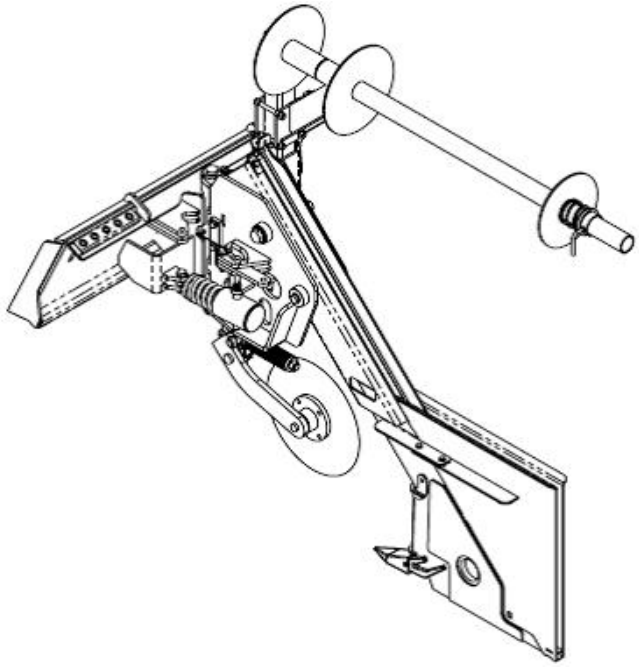

Ex Works – Delhi, IA

BASE UNIT includes mounting bracket, boom, cylinder, bucket linkage, hoses and QDs. Must order bucket for complete unit.

AUXILIARY BOOM HYDRAULICS REQUIRED (See note below for additional requirements	PART NUMBER	WEIGHT LB	PRICE
SKID HOE	87487656	305	$2,333.00

IMPORTANT:

This attachment requires base end bucket circuit port relief valve to be installed in loader control valve. Order Case part no. 87445935 for all manual control units up to late production 400 Series. Later production 400 Series manual control machines have port relief valves included. All pilot controlled units, track models, 450 models and all Alpha Series have had factory installed port relief valves since first production. Confirm port relief valve installation before operating this attachment.

ADDITIONAL EQUIPMENT (Must order bucket for complete unit)

	PART NUMBER	WEIGHT LB	PRICE
10" Bucket (.9 ft³)	86547428	72	$480.00
12" Bucket (1.2 ft³)	86547429	76	$500.00
16" Bucket (1.9 ft³)	86547430	89	$532.00
18" Bucket (2.1 ft³)	86547431	95	$555.00
24" Bucket (3.1 ft³)	86547432	115	$601.00

OPTIONAL EQUIPMENT

RIGID THUMB ATTACHMENT - factory installed	87487657	70	$750.00
RIGID THUMB ATTACHMENT - field installed	87487658	90	$566.00

MODEL COMPATIBILTY	SR130 SR150 SR160	SR175 SV185	SR200 SR210	SR220		SV250 SR250	SV300		TR270			TR320 TV380	REQ'D EQUIPMENT					
	410	420	430	440	435	445 450	465	420CT		440CT	445CT 450CT		STD FLOW	HIGH FLOW	CASE DRAIN	FRONT ELEC	DEMO DOOR	2ND AUX
SKID HOE	•	•	•	•	•	•	•	•	•	•	•	•	R					

FEATURES

- Digs trenches up to 6' deep with a skid steer
- Provides excellent mobility for digging footings
- Does not require stabilizers
- 2-1/4" x 18-1/4" cylinder provides up to 3,895 lb. breakout force
- Buckets common with 408/485 backhoes
- Thumb ready – factory or field installed
- Excellent for digging trenches or footings

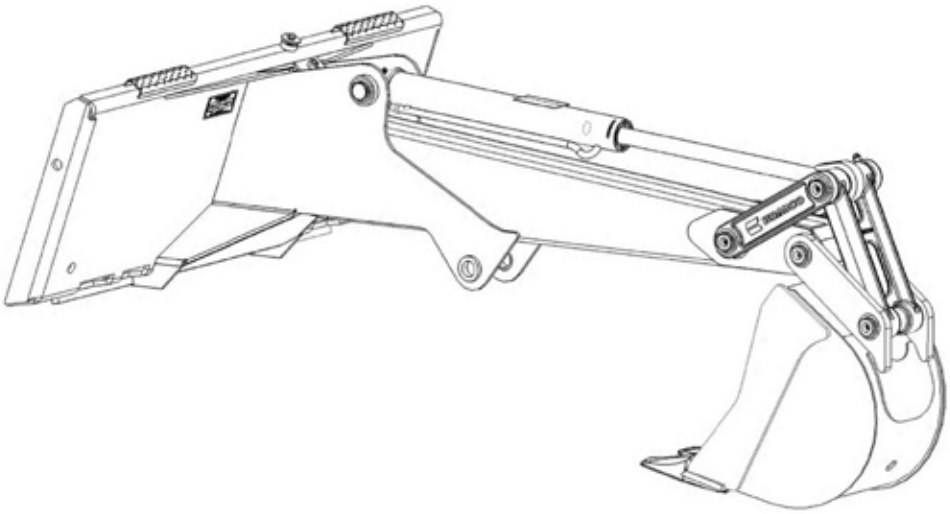

SNOW BLADES (STANDARD DUTY)

SKID STEER LOADERS/COMPACT TRACK LOADERS

Ex Works – Dexter, MI

Units are shipped complete with mounting bracket, hydraulic angling, hoses and quick couplers.

STANDARD AUXILIARY BOOM HYDRAULICS REQUIRED	PART NUMBER	WEIGHT LB	PRICE
SNOW BLADE, 60"	442972A1	450	$3,065.00
SNOW BLADE, 72"	H673881	475	$3,268.00
SNOW BLADE, 84"	H673869	500	$3,220.00

MODEL COMPATIBILTY	SR130 SR150 SR160	SR175 SV185	SR200 SR210		SR220		SV250 SR250	SV300		TR270			TR320 TV380	REQ'D EQUIPMENT					
	410	420		430 440		435	445 450	465	420CT		440CT	445CT 450CT		STD FLOW	HIGH FLOW	CASE DRAIN	FRONT ELEC	DEMO DOOR	2ND AUX
60" SNOW BLADE	•	•												R					
72" SNOW BLADE	•	•	•	•	•				•					R					
84" SNOW BLADE			•	•	•				•					R					

FEATURES

- Adjustable skid shoes
- Spring loaded trip protection
- Blade angle 30° maximum
- Reversible, replaceable edge
- Flat face hydraulic quick disconnects included
- Hydraulic hoses included
- 21.5" blade height
- 7 gauge reinforced moldboard
- Locking bolts for light dozer applications

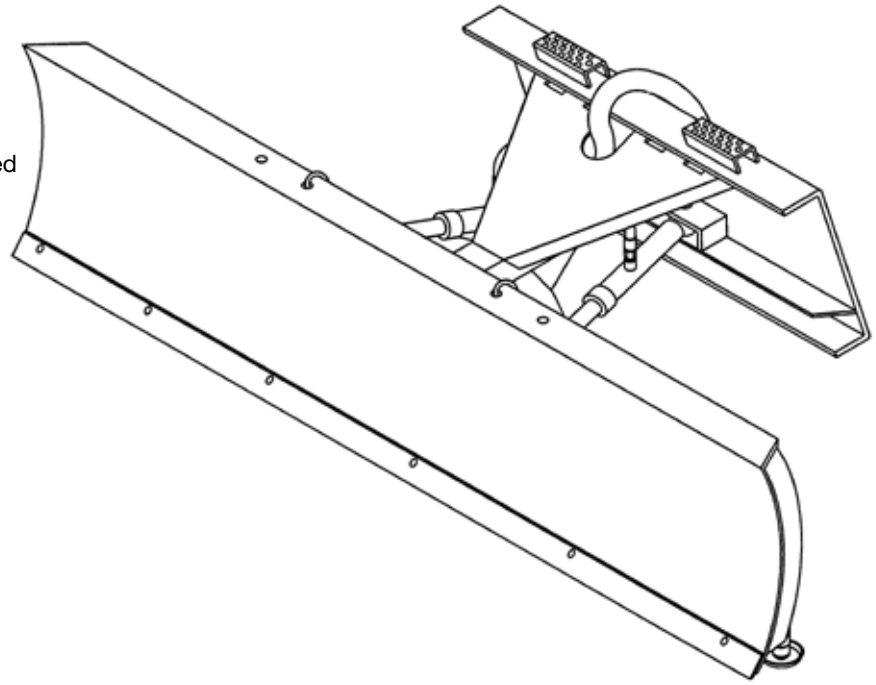

SNOW BLADES (HEAVY DUTY)

SKID STEER LOADERS/COMPACT TRACK LOADERS

Ex Works – Dexter, MI

Units are shipped complete with mounting bracket, hydraulic angling, hoses and quick couplers.

STANDARD AUXILIARY BOOM HYDRAULICS REQUIRED	PART NUMBER	WEIGHT LB	PRICE
SNOW BLADE, 84", w/steel cutting edge	442973A1	1135	$4,085.00
SNOW BLADE, 96", w/steel cutting edge	442974A1	1172	$4,255.00
SNOW BLADE, 108", w/steel cutting edge	442975A1	1240	$4,425.00
SNOW BLADE, 84", w/soft cutting edge	442977A1	1076	$4,585.00
SNOW BLADE, 96", w/soft cutting edge	442978A1	1105	$4,825.00
SNOW BLADE, 108", w/soft cutting edge	442979A1	1153	$5,065.00

MODEL COMPATIBILTY	SR130 SR150 SR160	SR175 SV185	SR200 SR210	SR220		SV250 SR250	SV300		TR270			TR320 TV380	REQ'D EQUIPMENT					
	410	420	430	440	435	445 450	465	420CT		440CT	445CT 450CT		STD FLOW	HIGH FLOW	CASE DRAIN	FRONT ELEC	DEMO DOOR	2ND AUX
84" SNOW BLADE		•	•	•	•	•	•	•	•	•		•	R					
96" SNOW BLADE			•	•	•	•	•		•	•	•	•	R					
108" SNOW BLADE				•	•	•	•		•	•	•	•	R					

FEATURES

- Adjustable skid shoes
- Spring loaded trip protection
- Flat face hydraulic quick disconnects included
- Hydraulic hoses included
- 35 degree hydraulic angle in either direction
- 31.75" blade height
- 10 gauge reinforced moldboard
- Available with steel or rubber cutting edge

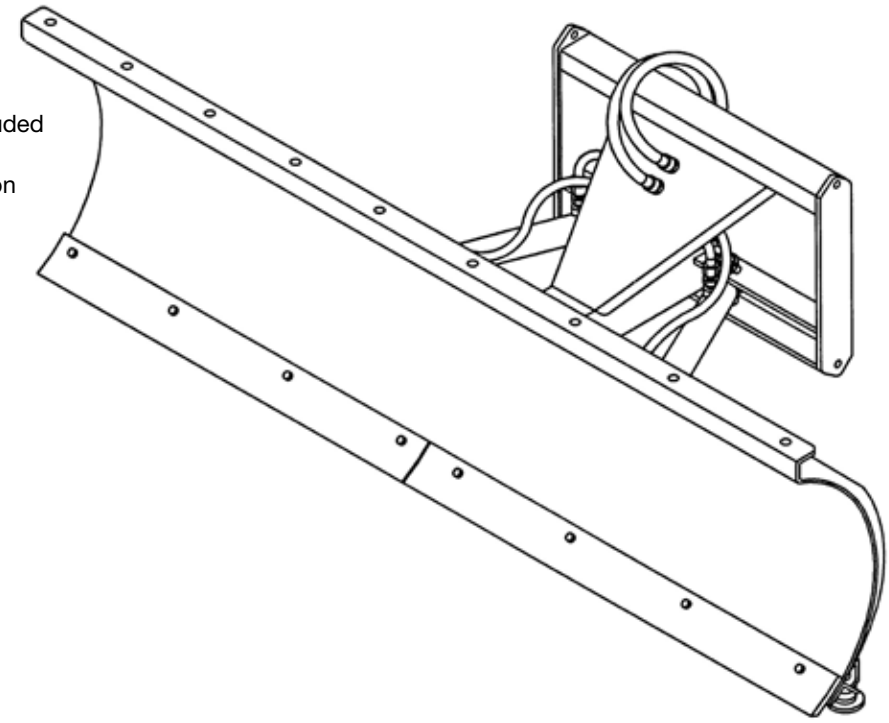

SNOW BLADES, TRIP EDGE

SKID STEER LOADERS/COMPACT TRACK LOADERS

Ex Works – Dexter, MI

BASE UNITS include steel edge, hoses and Quick Disconnects.

STANDARD AUXILIARY BOOM HYDRAULICS REQUIRED	PART NUMBER	WEIGHT LB	PRICE
TRIP EDGE SNOW BLADE, 84"	47531751	990	$4,495.00
TRIP EDGE SNOW BLADE, 96"	47531752	1045	$4,695.00
TRIP EDGE SNOW BLADE, 108"	47531753	1090	$4,895.00

OPTIONAL EQUIPMENT (ORDER AS NEEDED)

Rubber Edge, 84"	47531754	105	$540.00
Rubber Edge, 96"	47531755	115	$617.00
Rubber Edge, 108"	47531756	125	$690.00
Polyurethane Edge, 84"	47531757	60	$1,092.00
Polyurethane Edge, 96"	47531759	65	$1,248.00
Polyurethane Edge, 108"	47531760	70	$1,404.00
Replacement Steel Edge, 84"	47531761	80	$252.00
Replacement Steel Edge, 96"	47531762	90	$288.00
Replacement Steel Edge, 108"	47531763	100	$324.00
Deflector, 84"	47531764	62	$169.00
Deflector, 96"	47531766	64	$194.00
Deflector, 108"	47531767	66	$211.00
Marker Kit	84281638	5	$100.00

MODEL COMPATIBILTY	SR130 SR150 SR160	SR175 SV185	SR200 SR210	SR220		SV250 SR250	SV300		TR270			TR320 TV380	REQ'D EQUIPMENT					
	410	420	430	440	435	445 450	465	420CT		440CT	445CT 450CT		STD FLOW	HIGH FLOW	CASE DRAIN	FRONT ELEC	DEMO DOOR	2ND AUX
84" SNOW BLADE	•	•	•	•	•	•	•	•	•	•			R					
96" SNOW BLADE		•	•	•	•	•	•	•	•	•		•	R					
108" SNOW BLADE				•	•	•	•			•	•	•	R					

STANDARD FEATURES

- Standard 0.5” X 6” steel edge.
- Hydraulic angle - 30° left and right
- Optional rubber edge (1.5" X 10")
- Optional polyurethane edge (1" X 6")
- Optional 2-ply rubber snow deflector (0.25 X 10”)
- High visibility yellow moldboard
- Cutting edge trip system
- Adjustable skid shoes

REQUIREMENTS FOR OPERATION

- Standard auxiliary hydraulics

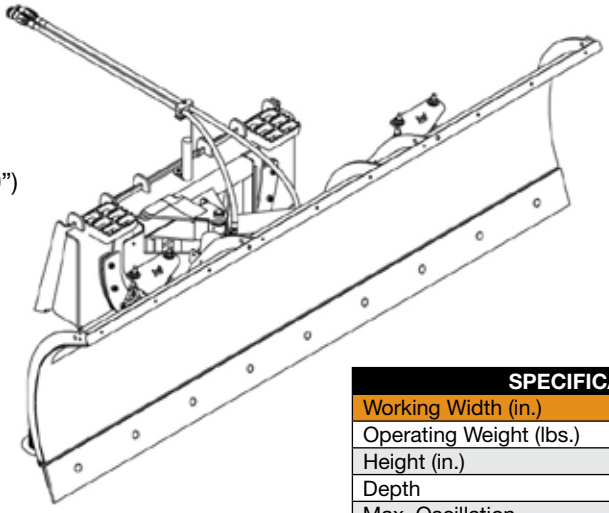

SPECIFICATIONS			
Working Width (in.)	84	96	108
Operating Weight (lbs.)	940	990	1,030
Height (in.)	33.3	33.3	33.3
Depth	41.8	41.8	41.8
Max. Oscillation	±5°	±5°	±5°
Width @ 30° angle (in.)	72.6	83.0	93.4

Ex Works – Dexter, MI

Snow blowers include skid steer mounting bracket, wire harness to boom electrical connector, hoses and hydraulic couplers.

STANDARD AUXILIARY BOOM HYDRAULICS AND ELECTRIC CONTROL KIT REQUIRED	PART NUMBER	WEIGHT LB	PRICE
72" SNOW BLOWER (F, 22-34 gpm)	84592485	1200	$9,851.00
72" SNOW BLOWER (G - Dual, 19-34 gpm)	84421455	1210	$11,356.00
72" SNOW BLOWER (H - Dual, 30-42 gpm)	84592487	1210	$12,278.00
84" SNOW BLOWER, (F, 22-34 gpm)	84592489	1280	$12,252.00
84" SNOW BLOWER (G - Dual, 19-34 gpm)	84421456	1290	$11,735.00
84" SNOW BLOWER (H - Dual, 30-42 gpm)	84592491	1290	$12,474.00
96" SNOW BLOWER (H - Dual, 30-42 gpm)	84592493	1370	$12,693.00
84" SNOW BLOWER (G - Dual, EHF) Includes EHF harness. No optional wiring harness	47358362	1290	$11,735.00
96" SNOW BLOWER (G - Dual, EHF) Includes EHF harness. No optional wiring harness	47358363	1370	$12,040.00

BASE UNIT OPTIONS (Must Order One - Not Required for EHF Units.)

Electric Harness Adapter (14 pin round connector - all 40XT, 60XT, 70XT and 75XT, 85XT, 90XT, 95XT built after 9/1/2001 and all 400 series and all Alpha-series.	87023319	1	$234.00
Electrical Control Package. Controls chute rotation and deflector. Package includes magnetically mounted in-cab control box, boom wiring harness and wiring to battery. Connects to wiring harness supplied with blower. For machines without Electric Control Kit.	87023320	5	$169.00
Electric Harness Adapter (8 pin rectangular connector 75XT, 85XT, 90XT, 95XT built before 9/1/2001)	87383458	1	$124.00

MODEL COMPATIBILTY	SR130 SR150 SR160		SR175 SV185	SR200 SR210 SR220			SV250 SR250	SV300			TR270			TR320 TV380	REQ'D EQUIPMENT						
	410	420		430	440	435 445	450 465		420CT	440CT		445CT 450CT			STD FLOW	HIGH FLOW	EHF	CASE DRAIN	FRONT ELEC	DEMO DOOR	2ND AUX
72" SNOW BLOWER (F, 22-34 gpm)		•	•	•		•			•		•					R			O		
72" SNOW BLOWER (G - Dual, 19-34 gpm)		•	•	•					•		•					R			O		
72" SNOW BLOWER (H - Dual, 30-42 gpm)					•		•	•		•						R			O		
84" SNOW BLOWER, (F, 22-34 gpm)			•	•		•			•		•					R			O		
84" SNOW BLOWER (G - Dual, 19-34 gpm)			•	•					•		•					R			O		
84" SNOW BLOWER (H - Dual, 30-42 gpm)					•	•	•	•		•		•	•			R			O		
96" SNOW BLOWER (H - Dual, 30-42 gpm)						•	•	•				•	•			R			O		
84" SNOW BLOWER (G - Dual, EHF)							•						•				R		R		
96" SNOW BLOWER (G - Dual, EHF)							•						•				R		R		

SNOW BLOWERS, HIGH FLOW

SKID STEER LOADERS/COMPACT TRACK LOADERS

Ex Works – Dexter, MI

FEATURES

- Two-stage hydraulic blowers blow snow up to 45 ft.
- Direct drive motors eliminate moving parts and wear
- Electrically-controlled, poly-lined chute and deflector
- Bolt-on replaceable wear edge, 1/2" x 4"
- 3/4" main drive hoses
- 5/8" supply hoses
- Adjustable skid shoes

REQUIREMENTS FOR OPERATION

- High flow hydraulics required
- Front electric kit installed on loader or complete control package

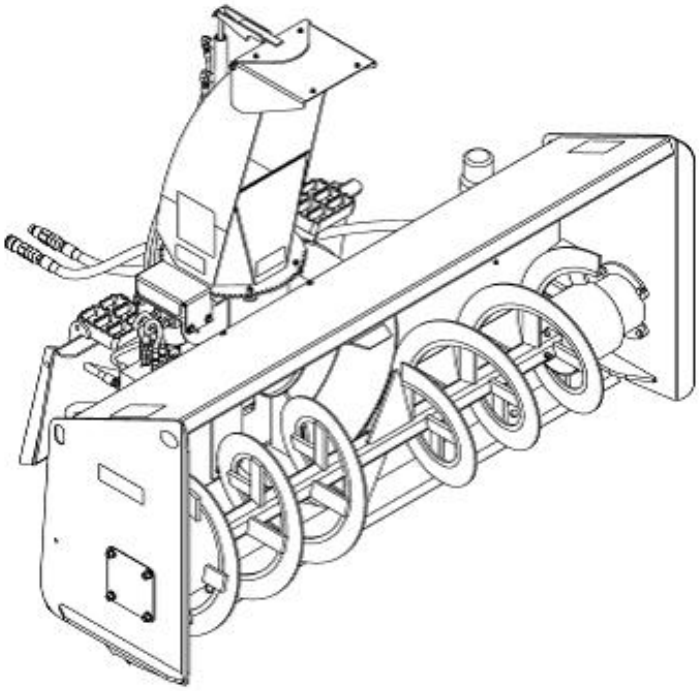

SPECIFICATIONS								
Model	**72F**	**72G**	**72H**	**84F**	**84G**	**84H**	**96G**	**96H**
Cut Height (in.)	36	36	36	36	36	36	36	36
Flow Range (gpm)	22-34	19-34	30-42	22-34	19-34	30-42	19-34	30-42
Auger Drive	Single motor	Dual motor	Dual motor	Single motor	Dual motor	Dual motor	Dual motor	Dual motor
Auger Diameter (in.)	18	18	18	18	18	18	18	18
Fan Drive	Single motor	Single motor	Single motor	Single motor	Single motor	Single motor	Single motor	Single motor
Fan Diameter	26	26	26	26	26	26	26	26
No. of fan blades	4	4	4	4	4	4	4	4

SNOW BLOWERS, STANDARD FLOW

SKID STEER LOADERS/COMPACT TRACK LOADERS

Ex Works – Dexter, MI

STANDARD AUXILIARY BOOM HYDRAULICS REQUIRED	PART NUMBER	WEIGHT LB	PRICE
SNOW BLOWER, 60" (D, 14 - 21 gpm)	84421457	650	$6,607.00
SNOW BLOWER, 72" (D, 14 - 21 gpm)	84421458	685	$6,761.00
SNOW BLOWER, 72" (E, 18 - 27 gpm)	84421459	685	$7,140.00
SNOW BLOWER, 84" (E, 18 - 27 gpm)	84421460	720	$7,338.00

BASE UNIT OPTIONS (Must Order One)

Electric Harness (14 pin round connector - all 40XT, 60XT, 70XT and 75XT, 85XT, 90XT, 95XT built after 9/1/2001), all 400 series and all Alpha series	87023319	1	$234.00
Electrical Control Package. Controls chute rotation and deflector. Package includes magnetically mounted in-cab control box, boom wiring harness and wiring to battery. Connects to wiring harness supplied with blower. For machines without Electric Control Kit.	87023320	6	$169.00
Electric Harness (8 pin connector - 75XT, 85XT, 90XT, 95XT built before 9/1/2001)	87383458	1	$124.00

MODEL COMPATIBILTY	SR130 SR150 SR160	410	420	SR175 SV185	430 440	435 445	450	465	420CT	440CT	445CT 450CT	TR320 TV380	REQ'D EQUIPMENT					
													STD FLOW	HIGH FLOW	CASE DRAIN	FRONT ELEC	DEMO DOOR	2ND AUX
SNOW BLOWER, 60" (D, 14 - 21 gpm)	•	•											R			O		
SNOW BLOWER, 72" (D, 14 - 21 gpm)	•			•									R			O		
SNOW BLOWER, 72" (E, 18 - 27 gpm)		•	•		•	•	•	•	•	•			R			O		
SNOW BLOWER, 84" (E, 18 - 27 gpm)					•	•	•	•		•	•	•	R			O		

FEATURES

- Two-stage hydraulic blowers blow snow up to 35 ft.
- Excellent visibility
- Electro-hydraulically controlled poly-lined chute and deflector
- High volume 24-1/2" shroud opening with 14" diameter auger and 18" diameter fan
- Wear resistant steel edge 3/8" x 3"
- 12 guage reinforced wrapper
- Adjustable skid shoes

REQUIREMENTS FOR OPERATION

- Standard auxiliary hydraulics
- Front electric kit installed on loader or complete electrical control package

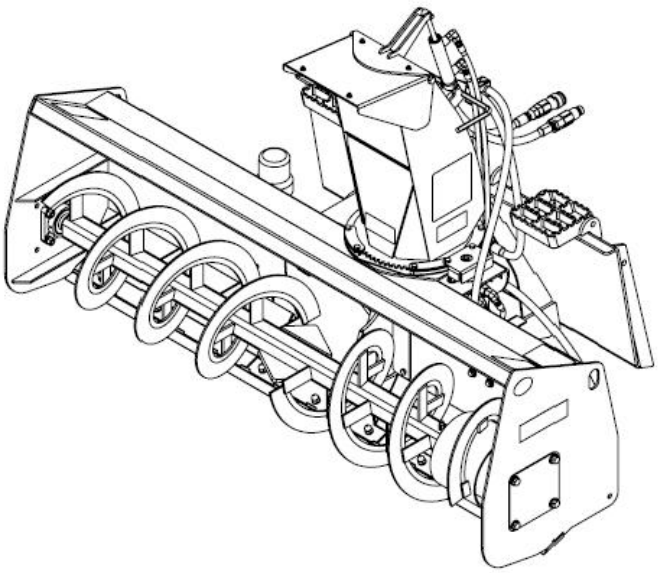

SNOW BUCKETS

SKID STEER LOADERS/COMPACT TRACK LOADERS

Ex Works – Dexter, MI

	PART NUMBER	WEIGHT LB	PRICE
MEDIUM DUTY SNOW BUCKET, 84"	87324180	725	$1,741.00
MEDIUM DUTY SNOW BUCKET, 96"	87324181	775	$1,857.00
HEAVY DUTY SNOW BUCKET, 96"	87324182	980	$2,304.00
HEAVY DUTY SNOW BUCKET, 108"	87324183	1060	$2,361.00

ADDITIONAL EQUIPMENT (Order as needed)

Bolt-on Cutting edge kit 84" (incl. reversible edge and hardware)	87324184	141	$473.00
Bolt-on Cutting edge kit 96"(incl. reversible edge and hardware)	87324185	161	$551.00
Bolt-on cutting edge kit 108" (incl. reversible edge and hardware)	87324186	181	$566.00

MODEL COMPATIBILTY	SR130 SR150 SR160	SR175 SV185	SR200 SR210	SR220		SV250 SR250	SV300		TR270			TR320 TV380	REQ'D EQUIPMENT					
	410	420	430	440	435	445 450	465	420CT		440CT	445CT 450CT		STD FLOW	HIGH FLOW	CASE DRAIN	FRONT ELEC	DEMO DOOR	2ND AUX
MEDIUM DUTY SNOW BUCKET, 84"	•	•	•	•	•			•	•	•								
MEDIUM DUTY SNOW BUCKET, 96"			•	•	•			•	•	•								
HEAVY DUTY SNOW BUCKET, 96"				•	•	•	•		•	•	•	•						
HEAVY DUTY SNOW BUCKET, 108"						•	•				•	•						

FEATURES

- Move large volumes of snow or other loose material efficiently
- Cut out back plate for improved visibility
- Pre-drilled cutting edges for bolt on edge

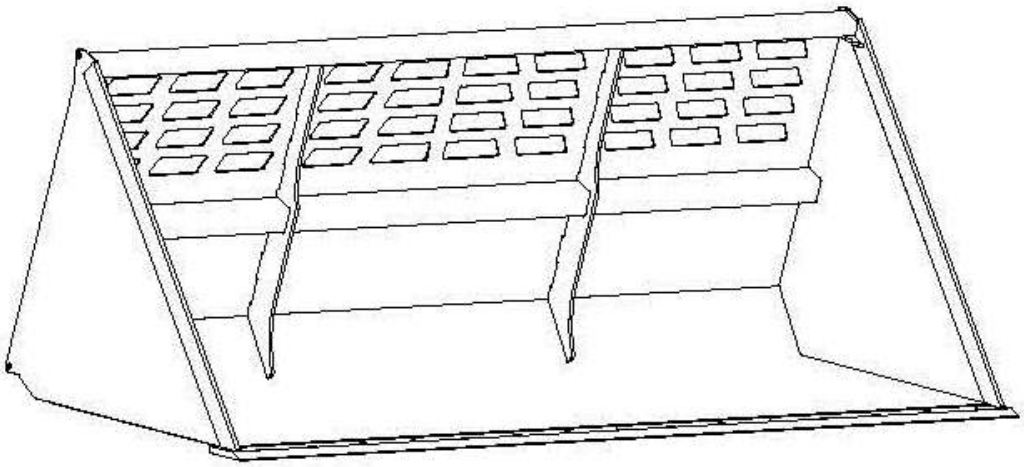

SPECIFICATIONS					
	Height A	Depth B	Leading Edge C	Struck Cap.	Heaped Cap.
84" Medium Duty	30"	42"	29.7"	1.14 yd^3	1.47 yd^3
96" Medium Duty	30"	42"	29.7"	1.31 yd^3	1.70 yd^3
96" Heavy Duty	38"	46"	32.5"	1.83 yd^3	2.36 yd^3
108" Heavy Duty	38"	46"	32.5"	2.07 yd^3	2.67 yd^3

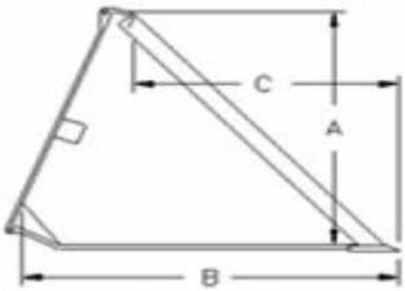

SNOW PUSH

SKID STEER LOADERS/COMPACT TRACK LOADERS

Ex Works – Dexter, MI

	PART NUMBER	WEIGHT LB	PRICE
SNOW PUSH - LOW PROFILE - 72"	47625941	605	$2,799.00
SNOW PUSH - LOW PROFILE - 84"	47625942	670	$2,855.00
SNOW PUSH - LOW PROFILE - 96"	47625943	735	$3,253.00
SNOW PUSH - LOW PROFILE - 120"	47625944	865	$3,646.00

OPTIONAL COMPONENTS – FACTORY INSTALLED (Order as needed)

PULL BACK KIT with rubber edge			
PULL BACK KIT - 72" LP	47645845	185	$769.00
PULL BACK KIT - 84" LP	47645846	215	$838.00
PULL BACK KIT - 96" LP	47645847	245	$911.00
PULL BACK KIT - 120" LP	47645848	300	$1,015.00

OPTIONAL COMPONENTS – FIELD INSTALLED (Order as needed)

PULL BACK KIT without rubber edge			
PULL BACK KIT - 72" LP	47625945	155	$415.00
PULL BACK KIT - 84" LP	47625946	175	$453.00
PULL BACK KIT - 96" LP	47625947	200	$492.00
PULL BACK KIT - 120" LP	47625948	250	$548.00
RUBBER EDGE KIT (Use as replacement edge for base push or add-on for pullback kit)			
RUBBER EDGE KIT - 72" LP	47626032	90	$423.00
RUBBER EDGE KIT - 84" LP	47626033	110	$513.00
RUBBER EDGE KIT - 96" LP	47626034	125	$513.00
RUBBER EDGE KIT 1- -20" LP	47626035	135	$582.00

MODEL COMPATIBILTY	SR130 SR150 SR160	SR175 SV185	SR200 SR210	SR220		SV250 SR250	SV300		TR270			TR320 TV380	REQ'D EQUIPMENT					
	410	420	430	440	435	445 450	465	420CT		440CT	445CT 450CT		STD FLOW	HIGH FLOW	CASE DRAIN	FRONT ELEC	DEMO DOOR	2ND AUX
SNOW PUSH 72IN LP	•	•	•	•	•			•	•	•								
SNOW PUSH 84IN LP	•	•	•	•	•	•	•	•	•	•	•	•						
SNOW PUSH 96IN LP			•	•	•	•	•		•	•	•	•						
SNOW PUSH 120IN LP						•	•				•	•						

STANDARD FEATURES:

- Moves large volumes of snow efficiently
- Draws back snow from confined areas with optional pull back kit
- Reversible, 1" x 8" rubber edge on main blade
- Reversible, replaceable ¾" x 5" wear shoes of abrasion resistant AR400 steel

APPLICATIONS:

- Snow, waste water, manure, feed lot and flood clean-up

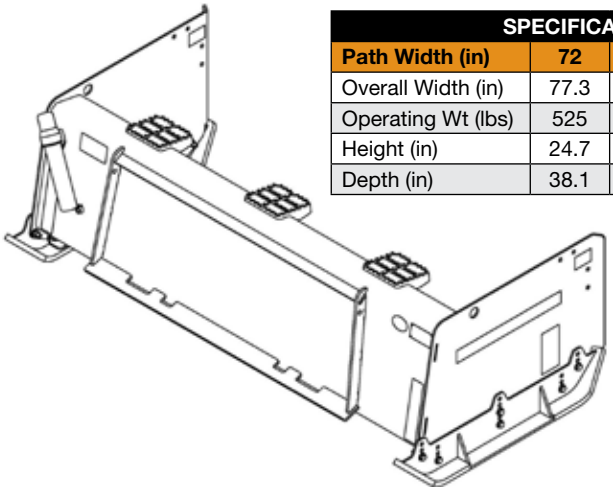

SPECIFICATIONS				
Path Width (in)	**72**	**84**	**96**	**120**
Overall Width (in)	77.3	89.3	101.3	125.3
Operating Wt (lbs)	525	570	610	705
Height (in)	24.7	24.7	24.7	24.7
Depth (in)	38.1	38.1	38.1	38.1

Ex Works – Delhi, IA

Stump grinders include skid-steer mounting bracket, wire harness to boom electrical connector, hoses and hydraulic couplers.

ELECTRIC CONTROL KIT REQUIRED AND AUXILIARY HYDRAULICS AS NOTED	PART NUMBER	WEIGHT LB	PRICE
STUMP GRINDER, Model SG26, standard flow (requires standard flow boom hydraulics, 15 - 22 gpm)	87050300	790	$8,436.00
STUMP GRINDER, Model SG30, high flow requires high flow boom hydraulics, 25 - 42 gpm)	87050301	860	$9,858.00

ADDITIONAL COMPONENTS (ORDER AS NEEDED)

Electrical control package, controls arm swing & depth. Package includes magnetically mounted, in-cab control box, boom wiring harness & wiring to battery. Connects to wiring harness supplied with stump grinder. For loaders not equipped with front electric kit.	87050304	3	$707.00
Wire harness adapter for 75XT, 85XT, 90XT, 95XT (adapts pre 9/1/2002 75XT, 85XT, 90XT, 95XT with 8-pin connector to 14-pin connector)	87048529	2	$151.00

MODEL COMPATIBILTY	SR130	SR150 SR160	SR175 SV185		SR200 SR210	SR220		SV250 SR250	SV300		TR270			TR320 TV380	REQ'D EQUIPMENT					
		410	420	430		440	435	445 450	465	420CT		440CT	445CT 450CT		STD FLOW	HIGH FLOW	CASE DRAIN	FRONT ELEC	DEMO DOOR	2ND AUX
STUMP GRINDER – STD FLOW (15-22)		•	•	•	•	•	•	•	•	•	•	•	•	•	R			R		
STUMP GRINDER – HIGH FLOW (25-42)			•	•	•	•	•	•	•	•	•	•	•	•		R	R	R		

SPECIFICATIONS	SG26 Standard Flow	SG30 High Flow
Overall Length	84 in.	84 in.
Overall Width	58 in.	58 in.
Overall Height	37 in.	37 in.
Weight (approx)	790 lb.	860 lb.
Wheel Diameter	26 in.	30 in.
Cutting Diameter	29 in.	33 in.
Number of Teeth	28	28
Flow Requirement	15-22 gpm	25-42 gpm
Max Pressure (continuous)	3000 psi	3000 psi
Wheel Speed	575-850 rpm	515-860 rpm
Lateral Sweep	60 degrees	60 degrees
Vertical Lift	43 degrees	43 degrees

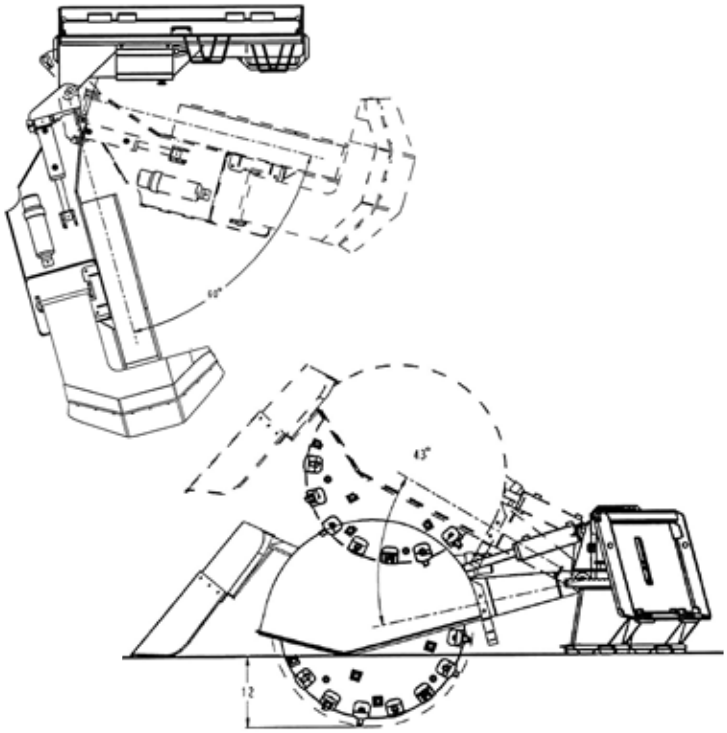

Stump Grinders (Continued next page)

STUMP GRINDERS

SKID STEER LOADERS/COMPACT TRACK LOADERS

Ex Works – Delhi, IA

FEATURES

- Models available for standard flow and high flow skid-steers
- Grinds stumps up to 12 inches below ground level
- 60 degree range of motion covers 45 inches in a single sweep
- Chips thrown away from loader protects operator
- Floating guard contains chips and allows better control when grinding below grade
- Operation from inside loader with multi-function control kit
- Adjustable valve permits operator to fine tune control swing and lift speeds
- Hydraulic braking action on wheel for faster shut-down
- Offset mount swing arm provides excellent visibility of stump while grinding
- Frame-mounted grouser pads provide exceptional stability with minimal ground disturbance
- Greasable hardened steel pivot pins for low maintenance and long life
- Durable carbide-tipped tooth with single lock nut used in all locations on wheel for ease of maintenance
- Tooth arrangement permits cutting from side to side and vertical directions
- Long-lasting powder coat finish used throughout frame and structure
- Double wall construction on moveable front shield
- Proven heavy-duty gearbox drive with torque arm motor support for longer motor and drive system life
- Large wheel diameter for high cutting force
- Easy access to all drive system and moving components allows for quick maintenance

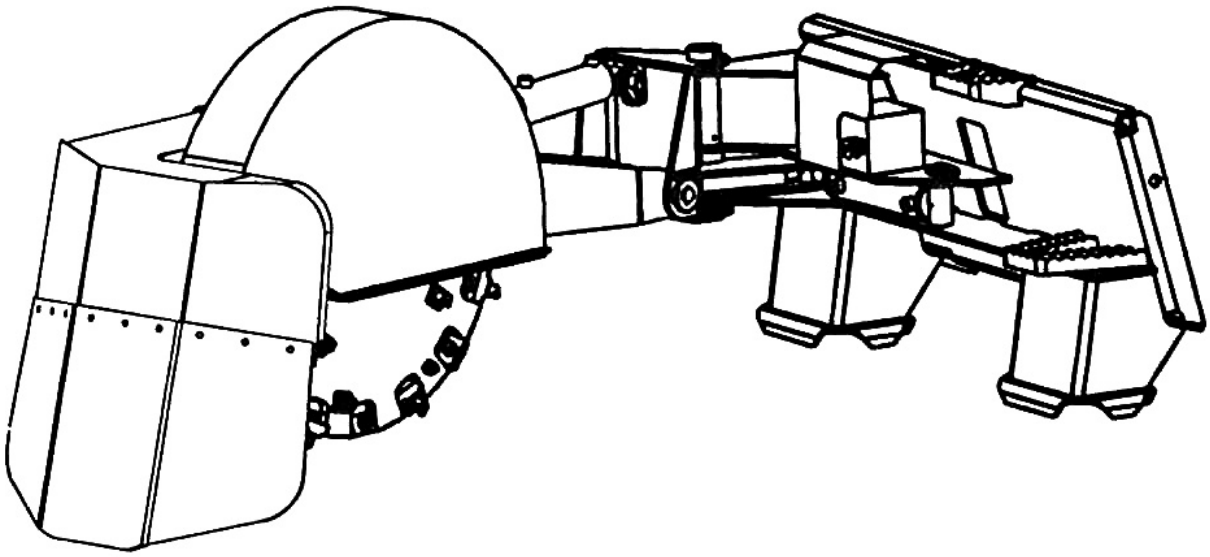

THREE-POINT HITCH

SKID STEER LOADERS/COMPACT TRACK LOADERS

Ex Works – Delhi, IA

	PART NUMBER	WEIGHT LB	PRICE
THREE POINT HITCH	H674390	208	$1,140.00

MODEL COMPATIBILTY	SR130 SR150 SR160	SR175 SV185	SR200 SR210	SR220		SV250 SR250	SV300		TR270			TR320 TV380	REQ'D EQUIPMENT					
	410	420	430	440	435	445 450	465	420CT		440CT	445CT 450CT		STD FLOW	HIGH FLOW	CASE DRAIN	FRONT ELEC	DEMO DOOR	2ND AUX
THREE POINT HITCH ADAPTER	•	•	•	•	•	•	•	•	•	•	•	•						

FEATURES

- Attaches like regular bucket, allows hookup to Category 1 equipment
- Bottom two arms slide to allow quick and easy hookup and maximum versatility

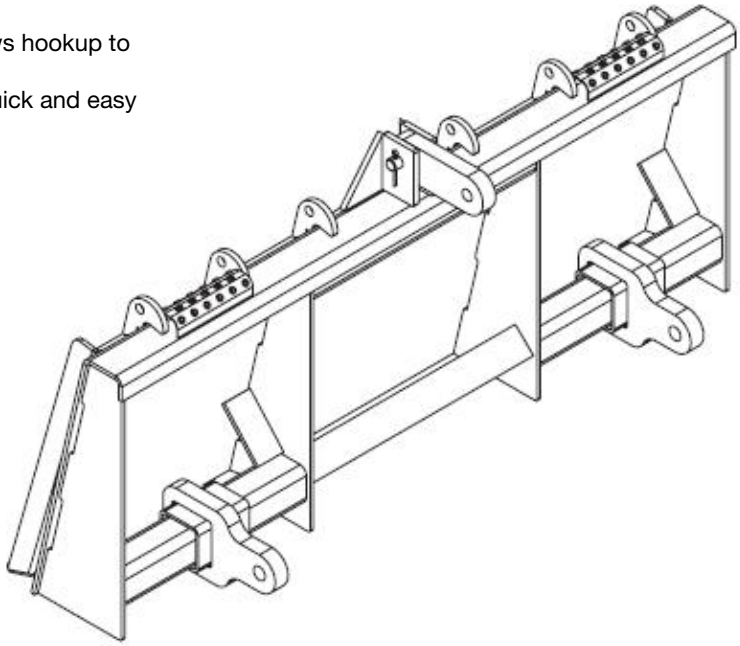

Ex Works – Delhi, IA

	PART NUMBER	WEIGHT LB	PRICE
HT52 - 52" TILLER (14-17 gpm)	84412545	880	$5,426.00
HT52 - 52" TILLER (18-25 gpm)	87311526	880	$5,426.00
HT66 - 66" TILLER (14-17 gpm)	84412546	1100	$5,959.00
HT66 - 66" TILLER (18-25 gpm)	87311527	1100	$5,960.00
HT66H - 66" TILLER HF (28-40 gpm)	87343219	1100	$6,663.00
HT78H - 78" TILLER HF (28-40 gpm)	87343220	1370	$7,119.00

ADDITIONAL COMPONENTS (Order as Needed)

SCARIFIER KIT for HT52	87311523	40	$251.00
SCARIFIER KIT for HT66, HT66H	87311524	50	$287.00
SCARIFIER KIT for HT78H	87343216	60	$363.00

MODEL COMPATIBILTY	SR130 SR150 SR160	410	SR175 SV185	SR200 SR210	SR220	435	SV250 SR250	SV300	420CT	TR270	440CT	445CT 450CT	TR320 TV380	REQ'D EQUIPMENT					
			420	430	440		445 450	465						STD FLOW	HIGH FLOW	CASE DRAIN	FRONT ELEC	DEMO DOOR	2ND AUX
52" TILLER – STD FLOW (14-17)	•													R					
52" TILLER – STD FLOW (18-25)		•	•	•	•	•	•	•	•	•	•	•	•	R					
66" TILLER – STD FLOW (14-17)	•													R					
66" TILLER – STD FLOW (18-25)		•	•	•	•	•	•	•	•	•	•	•	•	R					
66" TILLER – HIGH FLOW (28-40)			•	•	•	•	•	•	•	•	•	•	•		R	R			
78" TILLER – HIGH FLOW (28-40)					•	•	•	•		•	•	•	•		R	R			

STANDARD FEATURES

- Industry exclusive optional scarifiers pre-cuts rough crust to improve tiller efficiency
- Front hood is heavily ribbed which levels till as a leveling blade
- Exclusive off-set hitch on 52" allows tight cut next to obstacles
- Industry exclusive on 66" and 78" with dual hitch both off-set and center mount
- Productivity is further improved with high torque efficient chain system and large frame to handle trash
- Easily adjusted chain tension with CAM lock
- Dual rotation with bi-directional tines standard
- Single wide skid-shoe protects drive and controls depth

SPECIFICATIONS				
	HT52	HT66	HT66H	HT78H
Working Width (in.)	52	66	66	78
Overall Width (inches)	67.8	81.8	81.8	94.8
Weight - approx. (lbs.)	730	950	950	1220
Cutting Depth (in.)	6	6	6	6
Number of Tines	24	32	32	40
Flow Requirement (gpm)	14-17 18 - 28	14-17 18 - 28	28-40	28-40

APPLICATIONS

- Use for jobsite leveling, soil mixing, seedbed preparation

REQUIREMENTS FOR OPERATION

- Standard auxiliary hydraulics (as indicated)
- High flow auxiliary hydraulics (as indicated)

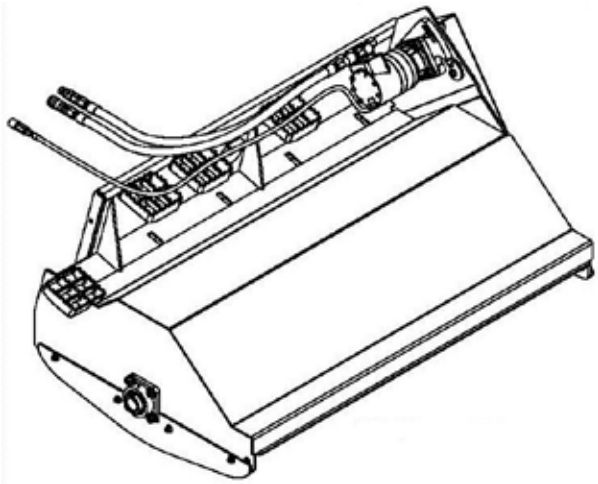

TILT-ATTACH

SKID STEER LOADERS/COMPACT TRACK LOADERS

Ex Works – Delhi, IA

Base units include hoses and quick disconnects.

REQUIRES STANDARD AUXILIARY BOOM HYDRAULICS	PART NUMBER	WEIGHT LB	PRICE
TILT-ATTACH, Heavy Duty Basic	87383459	400	$3,172.00
TILT-ATTACH, Heavy Duty with electric diverter valve	84257968	425	$4,459.00

COMPLETING KITS (Must select one for Tilt-Attach with diverter valve)

UNIVERSAL CONTROL KIT - Includes wire harness, switchbox to be mounted in cab and connections for 12V power. For loaders not equipped with Front Electric Kit	84257970	20	$350.00
HARNESS ADAPTER - Includes adapter to connect to 14 pin harness. For loaders equipped with Front Electric Kit	84257971	5	$278.00

MODEL COMPATIBILTY	SR130 SR150 SR160	SR175 SV185	SR200 SR210	SR220		SV250 SR250	SV300		TR270			TR320 TV380	REQ'D EQUIPMENT					
	410	420	430	440	435	445 450	465	420CT		440CT	445CT 450CT		STD FLOW	HIGH FLOW	CASE DRAIN	FRONT ELEC	DEMO DOOR	2ND AUX
TILT-ATTACH -HD BASIC	•	•	•	•	•	•	•	•	•	•	•	•	R					O
HD TILT-ATTACH - HD DIVERTER VALVE		•	•	•	•	•	•	•	•	•	•	•	R			O		

FEATURES

- Independently control attachment angle relative to loader
- Excellent tool for precision grading and contouring
- Mounts between loader and attachment
- Basic model for use with attachments not requiring aux. hydraulics or loader must be equipped with 2nd auxiliary
- Diverter valve model may be used with most standard flow hydraulic attachments

REQUIREMENTS FOR OPERATION

- Standard auxiliary hydraulics
- 2 auxiliary for Basic model if used with hydraulic attachments
- Front Electric Kit or Universal Control Kit for diverter valve model if used with hydraulic attachments

SPECIFICATIONS	
	Heavy Duty
Rotation	+/- 18°
Cylinder Bore	2.50"
Cylinder Rod Diameter	1.25"
Cylinder Stroke	3.0"
Attachment Offset	5.4"

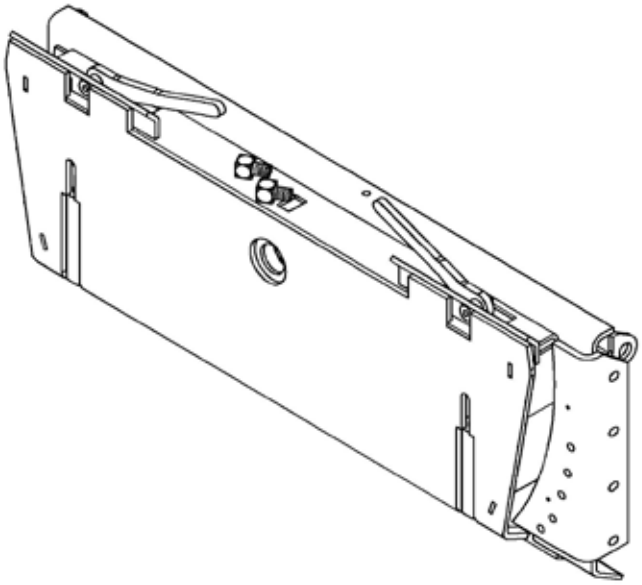

Ex Works – West Fargo, ND

Track sets include tracks, hardware and ratchet/strap installation tool. Order wheel spacer kits separately as specified.

	PART NUMBER	WEIGHT LB	PRICE
F-Series Cast Tracks for 27/10.50x15 tires	84406432	840	$2,607.00
F-Series Cast Tracks for 10.00x16.5 tires	87324797	918	$2,956.00
F-Series Cast Tracks for 31.5/13x16.5 tires	87324798	839	$3,675.00
F-Series Cast Tracks for 10x16.5 tires	87324799	969	$3,126.00
F-Series Cast Tracks for 12.00x16.5 tires	87324800	1018	$3,179.00
F-Series Cast Tracks for 33/15.50x16.5 tires	87324801	1145	$3,877.00
F-Series Cast Tracks for 12.00x16.5 tires	87324802	1072	$3,362.00
F-Series Cast Tracks for 33/15.50x16.5 tires	87324804	1200	$4,100.00
F-Series Cast Tracks for 12.00x16.5 tires	87324805	1072	$3,362.00
F-Series Cast Tracks for 33/15.50x16.5 tires	87324806	1206	$4,100.00
F-Series Cast Tracks for 12.00x16.5 tires	87324807	1125	$3,538.00
F-Series Cast Tracks for 33/15.50x16.5 tires	87324808	1266	$4,321.00

Tracks are not compatible with semi-pneumatic, liquid filled, foam filled or any non-pneumatic tires.

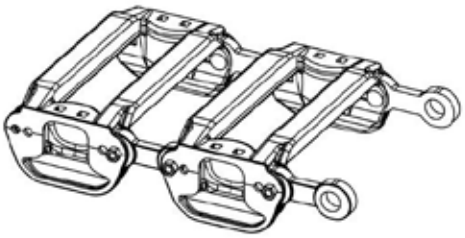

ADDITIONAL COMPONENTS (Order as Needed)

Wheel spacer kit, 1-1/2" (M16)	84426158	70	$451.00
Wheel spacer kit, 2" (M16)	84426159	84	$504.00

MODEL COMPATIBILTY	SR130 SR150 SR160		410 420 (<S3) 40XT		420-S3 430 440 60XT 70XT		430 440 60XT 70XT	SR175 SV185 SR200 SR210			435 445 75XT 85XT		450 90XT		465 95XT		SR220 SR250		SV250 SV300		SR220 SR/SV250 SV300
	10.00X16.5	27/10.50X15	10.00X16.5	31.5/13X16.5	10.00X16.5	12.00X16.5	33/15.5X16.5	10.00X16.5	12.00X16.5	33/15.5X16.5	12.00X16.5	33/15.5X16.5	12.00X16.5	33/15.5X16.5	12.00X16.5	33/15.5X16.5	12.00X16.5	33/15.5X16.5	12.00X16.5	33/15.5X16.5	14x17.5
84406432		•																			
87324797			•																		
87324798				•																	
87324799					•			•													
87324800						•			•												
87324801							•														
87324802											•										
87324804												•									
87324805													•								
87324806										•				•							
87324807															•		•		•		
87324808																•		•		•	
WHEEL SPACERS																					
84426158								SR	•	•							•	•			
84426159			•	•		•	•	SV				•		•		•			•*	•*	

*Minimal clearance to boom with 50mm stops.

TREE SHOVEL

SKID STEER LOADERS/COMPACT TRACK LOADERS

Ex Works – Dexter, MI

	PART NUMBER	WEIGHT LB	PRICE
TREE SHOVEL, 36"	87383455	260	$1,502.00
TREE SHOVEL, 42"	87383456	360	$1,577.00
TREE SHOVEL, 48"	87383457	460	$1,683.00

MODEL COMPATIBILTY	SR130 SR150 SR160	SR175 SV185	SR200 SR210	SR220		SV250 SR250	SV300		TR270			TR320 TV380	REQ'D EQUIPMENT					
	410	420	430	440	435	445 450	465	420CT		440CT	445CT 450CT		STD FLOW	HIGH FLOW	CASE DRAIN	FRONT ELEC	DEMO DOOR	2ND AUX
36" TREE SHOVEL	•	•	•	•	•	•	•	•	•	•	•	•						
42" TREE SHOVEL,	•	•	•	•	•	•	•	•	•	•	•	•						
48" TREE SHOVEL,	•	•	•	•	•	•	•	•	•	•	•	•						

FEATURES

- Dig holes for incoming trees
- Transplant trees and shrubbery
- Transport/load prepackaged trees
- Place large decorative stones easily
- Constructed of 3/8" plate with sharp tapered edge

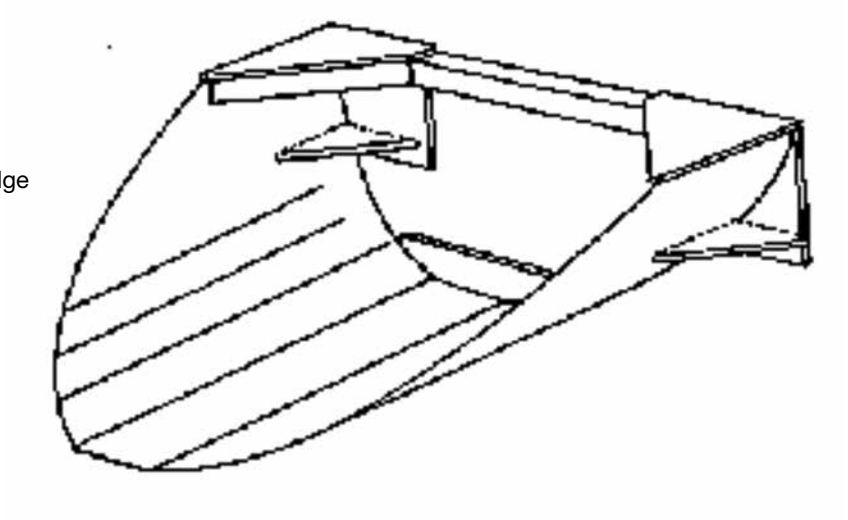

Ex Works – Delhi, IA

For specified skid-steer loaders equipped with standard auxiliary boom hydraulics. Includes complete spade with standard control harness, hoses, fittings and quick couplers.

AUXILIARY BOOM HYDRAULICS REQUIRED. REAR STABILIZERS RECOMMENDED.* FRONT ELECTRIC KIT FOR 400 SERIES LOADERS.	PART NUMBER	WEIGHT LB	PRICE
External Frame, 15° Blade Angle with Under Cutter, Clegg-type Spades			
3215 TREE SPADE including 32 in. blade set	87050388	1800	$16,707.00
Internal Frame, 25° Blade Angle, Truncated Spades			
2625 TREE SPADE	87050389	1150	$12,189.00
3625 TREE SPADE	87050390	1640	$13,502.00
4425 TREE SPADE	87050391	1875	$17,104.00

*See "Rear Stabilizer" pages for rear stabilizer options.

ADDITIONAL COMPONENTS (Order as Needed)

Electrical control package includes magnetically mounted control handle for cab, wire harness to tree spade connector and battery (Required for all XT models)	87050392	3	$1,462.00
20" Blade set for 3215	87050395	300	$2,069.00
24" Blade set for 3215	87050396	310	$2,066.00
28" Blade set for 3215	87050397	330	$2,069.00

MODEL COMPATIBILTY	SR130 SR150 SR160		SR175 SV185	SR200 SR210	SR220			SV250 SR250	SV300		TR270			TR320 TV380	REQ'D EQUIPMENT					
	410	420		430		440 435	445 450		465	420CT		440CT	445CT 450CT		STD FLOW	HIGH FLOW	CASE DRAIN	FRONT ELEC	DEMO DOOR	2ND AUX
3215 TREE SPADE						•	•	•	•		•	•	•	•	R			O		
2625 TREE SPADE			•	•	•	•	•	•	•	•	•	•	•	•	R			O		
3625 TREE SPADE						•	•	•	•		•	•	•	•	R			O		
4425 TREE SPADE							•		•				•	•	R					

Tree Spades (Continued next page)

TREE SPADES

SKID STEER LOADERS/COMPACT TRACK LOADERS

Ex Works – Delhi, IA

CLEGG TYPE SPADES

- External frame supports under cutter and increases strength
- Under cutter cuts all roots including taproot
- Blades have flat chisel bottom to cut roots as blades are lowered
- Optional blade sets available for quick change of dirt ball size
- Produces perfect round ball to maximize amount of roots for regrowth

25° TRUNCATED SPADE

- Inside frame allows work in tight areas
- Blade towers use high density plastic sides to eliminate greasing
- Produce several uniform ball sizes with 1 set of blades
- Inside frame style allows compressing tree ball in the basket

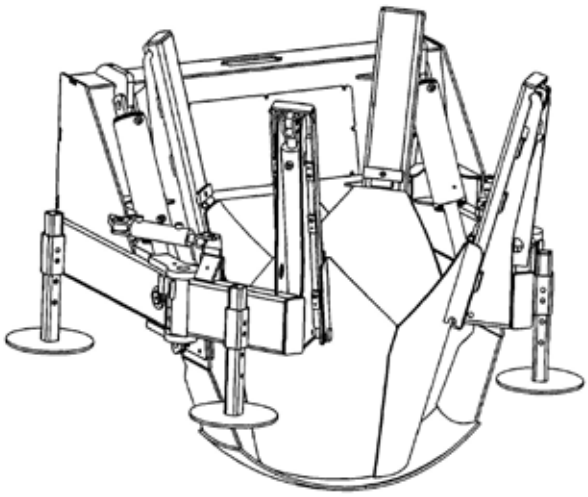

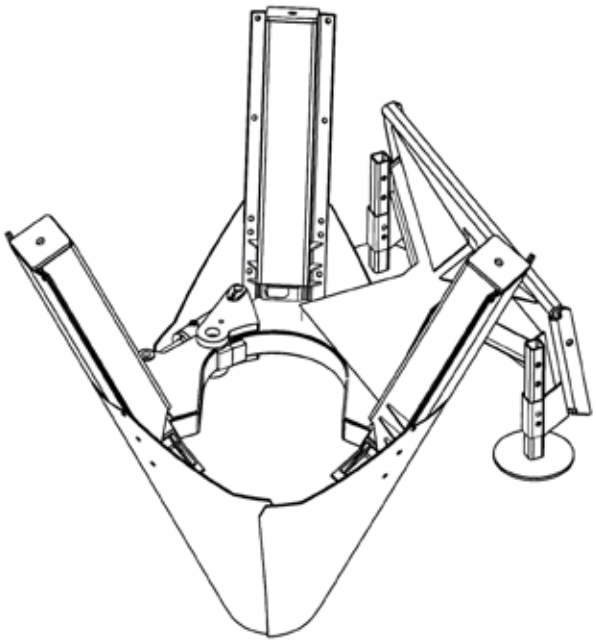

FEATURES, ALL MODELS

- Designed for production tree harvesting, nursery applications and landscaping
- Low profile blade towers to allow machine to fit between closely planted trees
- High strength “T1” steel blade material
- Two year warranty
- Overlapping blades to clear cut roots
- Adjustable blade slides to maintain alignment
- Adjustable blade depth control legs
- Wide gate opening to clear trees easily
- Produces round balls that actually fit wire baskets available from many vendors
- Built heavy for use at production nurseries and rental centers
- Straight blade design has less resistance in penetrating soil

Ex Works – Delhi, IA

Basic trencher includes trencher head, mounting brackets, manual sideshift, hoses and quick couplers. Must specify boom and chain options separately. Optional hydraulic sideshift also available separately.

	PART NUMBER	WEIGHT LB	PRICE
MODEL 625 TRENCHER-STD FLOW (14-22 gpm)	87050942	870	$3,787.00
MODEL 640 TRENCHER-HIGH FLOW (25-28gpm)	84421969	900	$4,894.00
MODEL 640 TRENCHER -HIGH FLOW(29-35 gpm)	87554974	940	$5,995.00

MODEL COMPATIBILTY	SR130 SR150 SR160	SR175 SV185		SR200 SR210	SR220		SV250 SR250	SV300		TR270			TR320 TV380	REQ'D EQUIPMENT					
	410		420 430		440	435	445 450	465	420CT		440CT	445CT 450CT		STD FLOW	HIGH FLOW	CASE DRAIN	FRONT ELEC	DEMO DOOR	2ND AUX
625 TRENCHER - STD FLOW (14-22 gpm)	•	•	•	•	•	•	•	•	•	•	•	•	•	R					O
MODEL 640 TRENCHER-HIGH FLOW (25-28gpm)		•													R	R			O
MODEL 640 TRENCHER - HIGH FLOW(29-35 gpm)			•	•	•	•	•	•	•	•	•	•	•		R	R			O

OPTIONS (Order as required)

	PART NUMBER	WEIGHT LB	PRICE
Hydraulic Side shift package - Requires 2nd aux. kit	86620056	52	$626.00

BOOM AND CRUMBER OPTIONS (Must Order One to Complete Unit)

	PART NUMBER	WEIGHT LB	PRICE
30" Boom and crumber assembly	86620052	104	$586.00
36" Boom and crumber assembly	86620053	115	$624.00
42" Boom and crumber assembly	86620054	128	$645.00
48" Boom and crumber assembly	86620055	140	$673.00
60" Boom and crumber assembly (for model 640 only)	87554975	180	$792.00

CHAIN OPTIONS 50,000 lb, 2" pitch (Must match boom length. Order one to Complete Unit.)

For 30" Boom - Tooth Every Station (TES)			
6" wide chain	9862922	110	$713.00
8" wide chain	9862923	118	$784.00
10" wide chain	9862924	130	$1,049.00
12" wide chain	9862925	145	$1,121.00
For 30" Boom - Tooth Every Other Station (TEOS)			
6" wide chain	9862934	89	$603.00
8" wide chain	9862935	94	$726.00
10" wide chain	9862936	98	$790.00
12" wide chain	9862937	108	$824.00
For 30" Boom - Rock and Frost Chain			
6" wide chain (50% bullet teeth/ 50% cup teeth)	86621857	152	$1,780.00
For 30" Boom - Shark tooth Chain			
6" wide chain (70% shark teeth/30% cup teeth)	87027549	118	$933.00
6" wide chain (100% shark teeth)	87027550	121	$1,054.00

Trenchers (continued next page)

Ex Works – Delhi, IA

CHAIN OPTIONS 50,000 lb, 2" pitch (Must match boom length. Order one to Complete Unit.) — (continued)

	PART NUMBER	WEIGHT LB	PRICE
For 36" Boom - Tooth Every Station (TES)			
6" wide chain	9862926	135	$863.00
8" wide chain	9862927	142	$879.00
10" wide chain	9862928	155	$1,084.00
12" wide chain	87050858	190	$1,245.00
For 36" Boom - Tooth Every Other Station (TEOS)			
6" wide chain	9862938	103	$673.00
8" wide chain	9862939	108	$714.00
10" wide chain	9862940	116	$790.00
For 36" Boom - Rock and Frost Chain			
6" wide chain (50% bullet teeth/50% cup teeth)	86621858	182	$1,869.00
For 36" Boom - Shark Tooth Chain			
6" wide chain (70% shark teeth/30% cup teeth)	87027551	133	$1,129.00
6" wide chain (100% shark teeth)	87027552	137	$1,232.00
For 42" Boom - Tooth Every Station (TES)			
6" wide chain	9862929	148	$908.00
8" wide chain	9862930	156	$1,035.00
10" wide chain	9862931	170	$1,210.00
For 42" Boom - Tooth Every Other Station (TEOS)			
6" wide chain	9862941	117	$780.00
8" wide chain	9862942	123	$777.00
10" wide chain	9862943	132	$865.00
For 42" Boom - Rock and Frost Chain			
6" wide chain (50% bullet teeth/50% cup teeth)	86621859	212	$2,092.00
For 42" Boom - Shark Tooth Chain			
6" wide chain (70% shark teeth/30% cup teeth)	87027553	153	$1,220.00
6" wide chain (100% shark teeth)	87027554	151	$1,414.00
For 48" Boom - Tooth Every Station (TES)			
6" wide chain	9862932	160	$1,045.00
8" wide chain	9862933	170	$1,136.00
For 48" Boom - Tooth Every Other Station (TEOS)			
6" wide chain	9862944	130	$824.00
8" wide chain	9862945	137	$879.00
For 48" Boom - Rock and Frost Chain			
6" wide chain (50% bullet teeth/50% cup teeth)	86621860	242	$2,247.00
For 48" Boom - Shark Tooth Chain			
6" wide chain (70% shark teeth/30% cup teeth)	87027555	168	$1,285.00
6" wide chain (100% shark teeth)	87027556	172	$1,521.00
For 60" Boom - Tooth Every Station (TES)			
6" wide chain	9862960	173	$1,197.00
For 60" Boom - Tooth Every Other Station (TEOS)			
6" wide chain	9862970	149	$1,011.00
For 60" Boom - Rock and Frost Chain			
6" wide chain (50% bullet teeth/50% cup teeth)	87050857	251	$2,541.00
For 60" Boom - Shark Tooth Chain			
6" wide chain (70% shark teeth/30% cup teeth)	87027565	195	$1,634.00

Trenchers (Continued next page)

TRENCHERS

SKID STEER LOADERS/COMPACT TRACK LOADERS

Ex Works – Delhi, IA

FEATURES

- Side shift: Manual standard; Hydraulic optional
- 2" pitch, 50,000 lb, anti-back flex chain for maximum performance and life
- High torque hydraulic motor for maximum digging power
- Heavy duty chain (625) or planetary (640) reduction amplifies torque to cutting chain
- Sealed idler bearing is maintenance free (625)
- Low profile dirt shield for improved operator visibility
- Built-in skid shoe to provide positive depth control for auger
- Pivoting crumber shoe and bar to assist with loose soil removal from trench
- Bolt-on replaceable wear strips on boom extend boom life under rough conditions
- Drum scrapers included

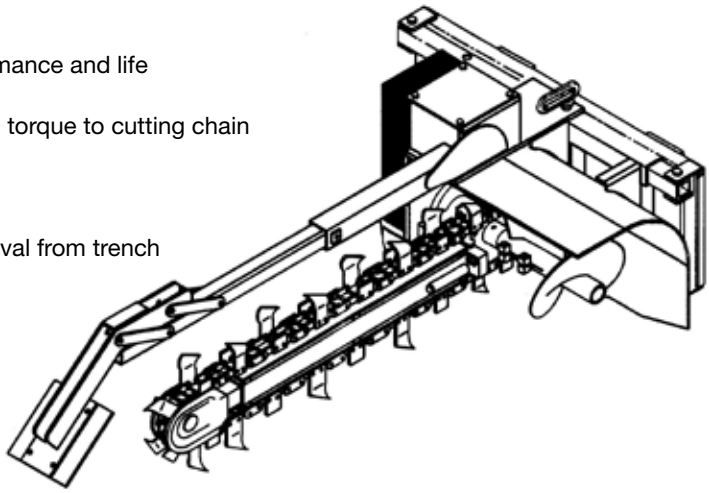

REQUIREMENTS FOR OPERATION

- Standard Auxiliary hydraulics (as indicated)
- High Flow Auxiliary hydraulics (as indicated)

SPECIFICATIONS					
DESCRIPTION	**30 in.**	**36 in.**	**42 in.**	**48 in.**	**60 in.**
Trench Depth with Auger @ 65° Digging Angle.	30"	36"	42"	48"	60"
Trench Widths Available:	6, 8, 10, 12"	6, 8, 10, 12"	6, 8, 10"	6, 8"	6"
Recommended Trenching Angle	65°	65°	65°	65°	65°
Head shaft Height	8"	8"	8"	8"	8"
Overall Trencher Length	66"	73"	80"	86"	86"
Overall Trencher Width	48"	48"	48"	48"	48"
Overall Trencher Height	32"	32"	32"	32"	32"
Spoil Discharge Reach	18"	18"	18"	18"	18"
Side Shift, Right of Corner	17"	17"	17"	17"	17"
Distance from Centerline Drive Sprocket to Back of Mounting Frame	16"	16"	16"	16"	16"

CHAIN SELECTION

TOOTH EVERY STATION (TES):
Designed for standard digging conditions in light to moderately compacted, sandy, loam soils and loosely packed gravelly soils. Typically good digging conditions

TOOTH EVERY OTHER STATION(TEOS):
Designed to be the most productive in wet, sticky conditions such as wet clay, gumbo, etc. TEOS allows sticky soils to be discharged as it comes around the headshaft sprocket allowing the auger to pick it up and discharge spoil to the side of the trench.

ROCK AND FROST CHAIN 50/50 (50% R&F teeth/50% cup teeth):
Gives highest production in frozen ground, highly compacted or rocky soils. Bullet shaped rock teeth break tougher soils and rock allow-ing the cup teeth to pick it up and clean the trench. Aggressive in tough conditions but not as productive in lighter normal conditions.

SHARK TOOTH CHAIN 70/30 (70% Shark teeth/30% cup teeth):
The 70/30 chain should be used in compacted soils, light frozen ground, baked hard clay, shale or rocky soils. Shark teeth will slice, break and relieve the tough soils allowing cup teeth to follow and clean the trench. Not as productive as TES chain in normal digging conditions.

FULL SHARK TOOTH CHAIN (100% SHARK teeth):
Full shark tooth chain is recommended for fracturable rock, shale, caliche or conditions with little or no loose soil. Will not efficiently clean the trench in sand, silt, and high moisture clay conditions.

VIBRATORY ROLLERS (PADFOOT DRUM)

SKID STEER LOADERS/COMPACT TRACK LOADERS

Ex Works – Delhi, IA

Units supplied complete with mounting plate, hoses and quick couplers.

REQUIRES STANDARD AUXILIARY BOOM HYDRAULICS	PART NUMBER	WEIGHT LB	PRICE
VRP48 48" VIBRATORY ROLLER	87373395	1630	$9,253.00
VRP66 66" VIBRATORY ROLLER	87373396	2085	$10,277.00
VRP73 73" VIBRATORY ROLLER	87373397	2230	$10,699.00
VRP84 84" VIBRATORY ROLLER	87373398	2455	$11,324.00

MODEL COMPATIBILTY	SR130 SR150 SR160		SR175 SV185	SR200 SR210	SR220		SV250 SR250	SV300		TR270			TR320 TV380	REQ'D EQUIPMENT					
	410	420		430	440	435	445 450	465	420CT		440CT	445CT 450CT		STD FLOW	HIGH FLOW	CASE DRAIN	FRONT ELEC	DEMO DOOR	2ND AUX
48" VIBRATORY ROLLER	•	•	•	•	•	•	•	•	•	•	•	•	•	R					
66" VIBRATORY ROLLER			•	•	•	•	•	•		•	•	•	•	R					
73" VIBRATORY ROLLER					•	•	•	•		•	•	•	•	R					
84" VIBRATORY ROLLER							•	•				•	•	R					

SPECIFICATIONS				
DESCRIPTION	VRP48	VRP66	VRP73	VRP84
Drum Width - in. (mm	48 (1219)	66 (1676)	73 (1854)	84 (2134)
Drum Diameter - in. (mm)	22 (559)	22 (559)	22 (559)	22 (559)
Dynamic Force - lb. (kn)	5750 (25.6)	7800 (34.7)	8550 (38.0)	9370 (41.7)
Frequency @ 20 gpm - vpm	2600	2600	2600	2600
Vibrating Wt. - lb. (kg	890 (404)	1130 (513)	1225 (556)	1370 (621)
Operating Wt. - lb. (kg)	1630 (739)	2085 (946)	2230 (1012)	2455 (1114)
Drum Oscillation	±15°	±15°	±15°	±15°
Max. Hyd. Flow - gpm (lpm)	25 (95)	25 (95)	25 (95)	25 (95)

FEATURES

- Compact sand, gravel or soil in preparation for concrete or asphalt surfacing
- ± 15° Drum oscillation
- Includes quick disconnects
- Can be center mounted or offset 12" to right
- Drum scrapers included

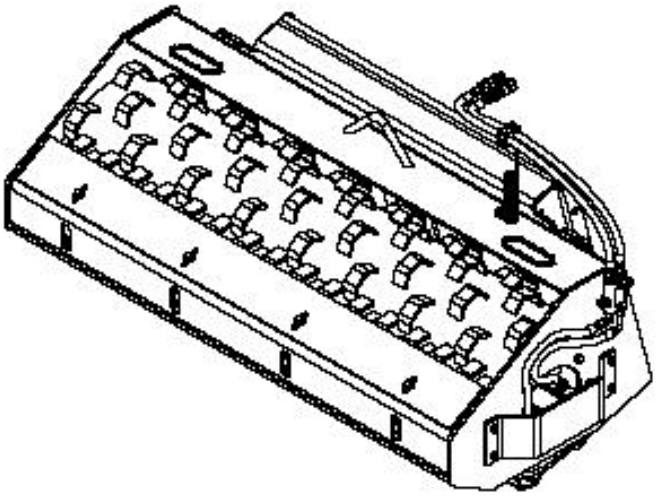

VIBRATORY ROLLERS (SMOOTH DRUM)

SKID STEER LOADERS/COMPACT TRACK LOADERS

Ex Works – Delhi, IA

Units supplied complete with mounting plate, hoses and quick couplers.

REQUIRES STANDARD AUXILIARY BOOM HYDRAULICS	PART NUMBER	WEIGHT LB	PRICE
VRS48 48" VIBRATORY ROLLER	87373001	1680	$8,776.00
VRS66 66" VIBRATORY ROLLER	87373002	2150	$9,622.00
VRS73 73" VIBRATORY ROLLER	87373003	2300	$10,032.00
VRS84 84" VIBRATORY ROLLER	87373004	2530	$10,478.00

MODEL COMPATIBILTY	SR130 SR150 SR160		SR175 SV185	SR200 SR210	SR220		SV250 SR250	SV300		TR270			TR320 TV380	REQ'D EQUIPMENT					
	410	420		430	440	435	445 450	465	420CT		440CT	445CT 450CT		STD FLOW	HIGH FLOW	CASE DRAIN	FRONT ELEC	DEMO DOOR	2ND AUX
48" VIBRATORY ROLLER	•	•	•	•	•	•	•	•	•	•	•	•	•	R					
66" VIBRATORY ROLLER			•	•	•	•	•	•		•	•	•	•	R					
73" VIBRATORY ROLLER					•	•	•	•		•	•	•	•	R					
84" VIBRATORY ROLLER							•	•				•	•	R					

SPECIFICATIONS				
DESCRIPTION	VRP48	VRP66	VRP73	VRP84
Drum Width - in. (mm	48 (1219)	66 (1676)	73 (1854)	84 (2134)
Drum Diameter - in. (mm)	24 (610)	24 (610)	24 (610)	24 (610)
Dynamic Force - lb. (kn)	5750 (25.6)	7800 (34.7)	8550 (38.0)	9370 (41.7)
Frequency @ 20 gpm - vpm	2600	2600	2600	2600
Vibrating Wt. - lb. (kg	935 (424)	1190 (540)	1290 (585)	1440 (653)
Operating Wt. - lb. (kg)	1680 (762)	2150 (975)	2300 (1043)	2550 (1157)
Drum Oscillation	±15°	±15°	±15°	±15°
Max. Hyd. Flow - gpm (lpm)	25 (95)	25 (95)	25 (95)	25 (95)

FEATURES

- Compact sand, gravel or soil in preparation for concrete or asphalt surfacing
- ± 15° Drum oscillation
- Includes quick disconnects
- Can be center mounted or offset 12" to right
- Drum scrapers included

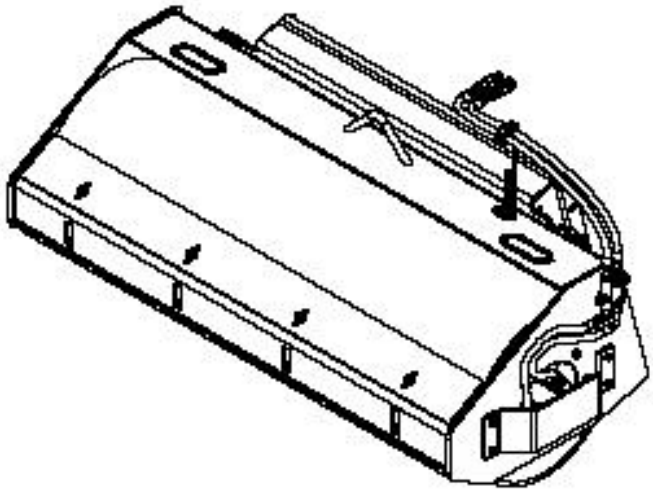

WATER KITS

SKID STEER LOADERS/COMPACT TRACK LOADERS

Ex Works – Delhi, IA

Water kit may be used with pick-up sweepers, angle brooms, cold planers, rock wheels, vibratory rollers and other attachments where dust control is important.

REQUIRES TUBING AND NOZZLE KIT FOR INDIVIDUAL ATTACHMENTS	PART NUMBER	WEIGHT LB	PRICE
Water Kit, Roof Mount for XT, 400 Series	87338935	329	$1,208.00
Water Kit, Roof Mount for Alpha Series	84399981	329	$1,208.00

OPTIONS (Order as Needed)

Water nozzle kit for brooms, other attachments - includes 4 nozzles, tubing, mounting brackets, hose and quick disconnect coupling	86619372	15	$242.00
Water nozzle kit , includes 3 spray nozzles, tubing and fitting to reach coupler on loader boom for SP12 - HP30 cold planers	87045462	10	$273.00
Water nozzle kit , includes 4 spray nozzles, tubing and fitting to reach coupler on loader boom for HP40 cold planer	87326406	12	$328.00

MODEL COMPATIBILTY	410 420	430 440	435 445	450 465	440	420CT 440CT	445CT 450CT	SR130 SR150 SR160	SR175 SV185	SR200 SR210 SR220	SV250 SR250	SV300	TR270	TR320 TV380	REQ'D EQUIP	
															STD FLOW	FRONT ELEC
Water Kit, Roof Mount for XT, 400 Series - 87338935	•	•	•	•	•	•	•									O
Water Kit, Roof Mount for Alpha Series - 84399981								•	•	•	•	•	•	•		O

FEATURES

- 30 gal capacity
- Roof-mounted, low profile tank
- Includes mounting brackets, pump, tubing to end of loader boom, wiring harness, control box

APPLICATIONS

- Pick-up brooms, angle brooms, cold planers, rock saws, cibratory rollers and other attachments requiring dust control.

REQUIREMENTS FOR OPERATION

- Nozzle kit for specific applications

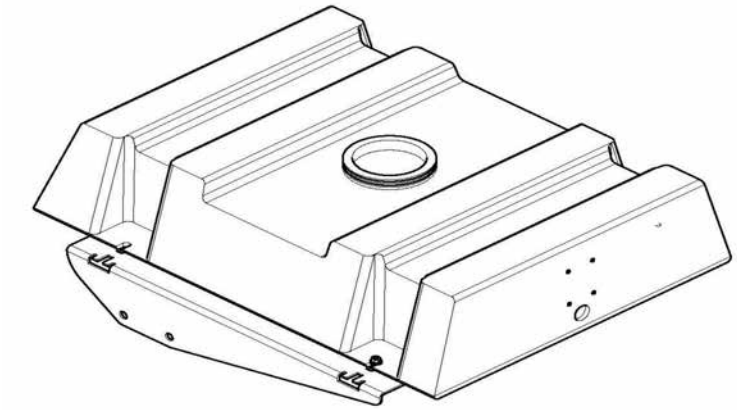

CONSTRUCTION EQUIPMENT

U.S. PRICE LIST

COMPACT TRACK LOADERS

PL-200 SL SAP REVISION 15b

REVISED JANUARY 1, 2015

The models listed below are included in this price list and are part of the Compact Track Loader Family.

TR270 TIER 4 FINAL
TR310 TIER 4 FINAL
TR320 TIER 4 INTERIM
TR340 TIER 4 FINAL
TV380 TIER 4 INTERIM
TV380 TIER 4 FINAL

Copyright 2015 By

CNH Industrial America, LLC

COMPACT TRACK LOADERS
TABLE OF CONTENTS

COMPACT TRACK LOADERS

SERIAL NUMBER BRAEK REFERENCE GUIDE…… CTL- 7

TR270 TIER 4 FINAL COMPACT TRACK LOADER

- Standard Features …….. CTL- 9
- Price List …… CTL- 11
- Attachment Dependency Matrix…… CTL- 17
- Factory Supplied Attachments…….. CTL- 21

TR310 TIER 4 FINAL COMPACT TRACK LOADER

- Standard Features …….. CTL- 25
- Price List …… CTL- 27
- Attachment Dependency Matrix…… CTL- 33
- Factory Supplied Attachments…….. CTL- 37

TR320 & TV380 TIER 4 INTERIM COMPACT TRACK LOADER

- Standard Features …….. CTL- 41
- Price List …… CTL- 43
- Attachment Dependency Matrix…… CTL- 49
- Factory Supplied Attachments…….. CTL- 55

TR340 & TV380 TIER 4 FINAL COMPACT TRACK LOADER

- Standard Features …….. CTL- 59
- Price List …… CTL- 61
- Attachment Dependency Matrix…… CTL- 67
- Factory Supplied Attachments…….. CTL- 73

TR270 T4 FINAL COMPACT TRACK LOADER
US PRICE LIST

(Ex Works Wichita, KS)

Standard Equipment

ENGINE:
- FPT F5HFL463A water cooled diesel engine
- 207 CID (3.4 L) Turbo
- Tier 4 Final Certified
- Particulate Matter Catalyst
- High Pressure Common Rail (HPCR) Fuel Injection
- Horsepower:
  - Gross 74
  - Net 68
  - Peak torque 232 lb-ft (314 Nm)
- 120 amp alternator
- Air cleaner - dual element
- Anti-freeze solution to -34° F
- Fuel tank - 19.5 gal. (U.S.)
- Single Plane, Top and Bottom Oil Cooler/Radiator Configuration
- No maintenance belt
- Glow Plugs
- Maintenance free 1000 CCA battery with master disconnect

OPERATOR'S PROTECTIVE STRUCTURE:
- ROPS/FOPS Level 1 canopy with side screens
- Control lockout system
- Tilt forward ROPS/FOPS
- Electric parking brake control
- Hand throttle
- Foot throttle
- Switchable (ISO - H) Electro Hydraulic Controls
- Operator's compartment floor cleanout
- Rear window with emergency escape
- Padded seat bar with integral arm rests
- Suspension Seat, vinyl with 2" retractable lap seat belt
- Foot rest
- Dome Light
- 12V Power plug socket
- Cup holder
- Tool Pocket

OPERATOR'S PROTECTIVE STRUCTURE (continued):
- Top window
- Headliner
- Alarm package (backup and horn)

HYDRAULICS:
- 6 micron oil filtration system
- 3 spool loader control valve
- Auxiliary hydraulics, Proportional thumb wheel activated: loader arm mounted with ISO specification flat face "connect-under-pressure" disconnects
  - Including case drain
- Heavy duty hydraulic oil cooler
- Loader arm float position
- Auxiliary hydraulic function lockout override
- Loader arm circuit lockout override
- Self Level
- Ride Control

LOADER:
- Mechanical attachment coupler
- Radial arm geometry
- Loader lift arm support strut
- SAE operating load:
  - 2700 lbs. at 50%
  - 1890 lbs. at 35%
- Tipping load: 5400 lbs.

INSTRUMENTATION:
- Advanced Instrument Cluster with
  - Hour meter
  - Tachometer
  - Fuel gauge
  - Hydraulic oil temperature gauge
  - Engine coolant temperature gauge
  - Diagnostic features
  - Security lock-out

TR270 T4 FINAL COMPACT TRACK LOADER
US PRICE LIST

(Ex Works Wichita, KS)

Standard Equipment

INSTRUMENTATION (continued):
- Warning lights with alarms:
  - Critical system stop
  - Engine system
  - Hydraulic system
  - Electrical and diagnostic system
- Warning alarms:
  - Battery voltage (plus display)
  - Engine oil service
- Indicator Light:
  - Engine preheat, Parking brake, Seat bar reminder

TRACK SYSTEM:
- Electro Hydraulic Controlled Hydrostatic 2-speed planetary final drive
- Positive drive imbedded steel rubber track belt
- Spring applied hydraulic release (SAHR) disc parking brake
- Dynamic braking

UNDERCARRIAGE:
- Rigid track frame mounting
- Permanently sealed (duo cone face seal) & lubricated idlers and rollers
- Triple flange lower rollers
- Single flange front and rear idlers
- Hydraulic track adjustment
- Track recoil spring
- Tapered track frame cover

OTHER STANDARD FEATURES:
- Lights - 2 front, 2 side, 2 rear flood (halogen)
- Heavy Duty Front Lights
- Pre-wired for rotating beacon
- Service access hood, lockable
- Single point daily service
- Tail lights
- Option Harness
- Remote oil drain
- Remote Oil and Fuel Filters
- Block Heater

TR270 T4 FINAL COMPACT TRACK LOADER
US PRICE LIST

(Ex Works Wichita, KS)

Models

COMMERCIAL MODEL	Weight	Factory Data	List Price
TR270-T4 FINAL	9,765 LB		$61,408.00

TR270 T4 FINAL COMPACT TRACK LOADER
US PRICE LIST

(Ex Works Wichita, KS)

Factory Supplied Options

Order Code	Description	Weight	Factory Data	List Price

CONTROLS AND TRANSMISSION

SD_01100 CONTROLS LEVEL

		761029	2 Speed Mechanical Controls **H-Pattern**			($2,245.00)
		761031	2 Speed E-H Controls **Electro-Hydraulic Switchable (ISO-H Pattern) Controls with Two Speed**			No Charge

ROPS/CAB

SD_05009 CAB

		761043	Open Cab (No Heat or HVAC) **with top window and keyed start**			No Charge
		761046	Enclosed Cab with Heater **Includes side windows, front glass door with wiper, shoulder belt, radio with speakers, and keyless start**			$4,474.00
		761045	Enclosed Cab with Heater & AC **Includes side windows, front glass door with wiper, shoulder belt, radio with speakers, and keyless start**			$6,069.00
		761184	Enclosed Cab w/Heat -Demo Door **Includes side windows, 1/2" polycarbonate front glass door with wiper, shoulder belt, radio with speakers, and keyless start**			$6,383.00
		761183	Enclosed Cab w/HVAC -Demo Door **Includes side windows, 1/2" polycarbonate front glass door with wiper, shoulder belt, radio with speakers, and keyless start**			$7,977.00

SD_05016 OPEN CAB TRIM

		X05016X	No Open Cab Interior Trim Pkg			No Charge
		761186	Open Cab Interior Trim Package **For use with Open Cab. Covers interior sides and rear.**			$330.00

SD_05185 CAB SEAT

		761052	Suspension Seat (Vinyl)			No Charge
		761062	Air Ride Suspension Seat **(Fabric) with temperature control** **(may not be ordered with Open Cab option 761043)**			$644.00

TR270 T4 FINAL COMPACT TRACK LOADER
US PRICE LIST

(Ex Works Wichita, KS)

SD_K6480 HEAVY DUTY FRONT LIGHTS

		XK6480X	No Heavy Duty Front Lights			($100.00)
		761201	Heavy Duty Front Lights			No Charge

COUPLER

SD_K5101 COUPLERS

		726003	Manual Coupler			No Charge
		726004	Hydraulic Coupler			$1,126.00

BLOCK HEATER

SD_02086 BLOCK HEATER

		X02086X	No Block Heater			($125.00)
		761048	Block Heater (120V)			No Charge

OPERATOR MANUALS

SD_32035 LANGUAGE OPTIONS

		761085	English USA			No Charge
		761088	French Canadian			No Charge
		761097	Spanish Latin American			No Charge

OPTIONAL PACKAGES

SD_01201 OPTION PACKAGES

		761032	Standard Equipment Only			($950.00)
		761034	Front Electric/Multi-Function **Contains Front Electric (Multi-function) for Standard Auxiliaries**			($587.00)
		761033	Performance Package **Contains ON/OFF One-way Self Leveling and Ride Control**			No Charge
		761035	Performance w/Front Electric **Contains ON/OFF One-Way Self Leveling, Ride Control, and Front Electric**			$669.00
		761036	High Flow Package **Contains High Flow Hydraulics with Front Electric**			$1,421.00
		761037	High Flow Plus Package **Contains Front Electric, High Flow Hydraulics, ON/OFF One-way Self Leveling and Ride Control**			$2,678.00

TR270 T4 FINAL COMPACT TRACK LOADER
US PRICE LIST

(Ex Works Wichita, KS)

TRACK BELT OPTIONS

SD_10015 TRACK OPTIONS

		8500117	320 mm (12.6 inch) **67" OTW**			No Charge

FRONT ATTACHMENTS

BUCKETS

SD_K5231 BUCKETS

		XK5231X	No Bucket			No Charge
Dirt & Foundry Bucket						
		761125	72" Dirt & Foundry Bucket **1829 mm, 16.7 cu. ft. Heaped Capacity**			$1,071.00
		761126	78" Dirt & Foundry Bucket **1981 mm, 18.4 cu. ft. Heaped Capacity**			$1,112.00
Heavy Duty Dirt Bucket						
		761142	72" Heavy Duty Dirt Bucket **1829 mm, 14.6 cu. ft. Heaped Capacity**			$1,329.00
		761143	78" Heavy Duty Dirt Bucket **1981 mm, 15.9 cu. ft. Heaped Capacity**			$1,442.00
Light Material Bucket						
		761136	72" Light Material Bucket **1829 mm, 23.7 cu. ft. Heaped Capacity**			$901.00
		761137	84" Light Material Bucket **2134 mm, 27.9 cu. ft. Heaped Capacity**			$1,051.00
Low Profile Bucket						
		761129	72" Low Profile Bucket **1829 mm, 14.5 cu. ft. Heaped Capacity**			$968.00
Low Profile Extended Bucket						
		761132	72" Low Profile Extended **1829 mm, 17.1 cu. ft. Heaped Capacity**			$1,076.00
		761133	78" Low Profile Extended **1981 mm, 18.6 cu. ft. Heaped Capacity**			$1,164.00
		761134	84" Low Profile Extended **2134 mm, 20.2 cu. ft. Heaped Capacity**			$1,257.00
Manure & Slurry Bucket						
		761139	72" Manure-Slurry Bucket **1829 mm, 19.1 cu. ft. Heaped Capacity**			$917.00
		761140	84" Manure-Slurry Bucket **2134 mm, 22.5 cu. ft. Heaped Capacity**			$1,066.00

TR270 T4 FINAL COMPACT TRACK LOADER
US PRICE LIST

(Ex Works Wichita, KS)

SPILL GUARDS

SD_K5400 SPILL GUARDS

		XK5400X	No Spill Guard			No Charge
		761177	72" Spill Guard **For use with Heavy Duty Buckets only**			$216.00
		761178	78" Spill Guard **For use with Heavy Duty Buckets only**			$237.00

BOLT ON CUTTING EDGES

SD_K6399 BOLT ON CUTTING EDGE

		XK6399X	No Bolt on Cutting Edge			No Charge
		761147	72" Bolt on Cutting Edge			$258.00
		761148	78" Bolt on Cutting Edge			$278.00

MOVE TO BIC

SD_K6440 OFF-SITE SERVICE

		XK6440X	No Offsite Service Arrangement			No Charge
		761175	Offsite Service Arrangement			No Charge

SPECIAL PAINT

SD_50103 SPECIAL PAINT

		X50103X	No Special Paint			No Charge
		726029	Special Paint **The price listed is for a color change only from the standard factory color: CNH #86609760 (MS42-Tan). All Special Color formulations will be applied using approved factory processes and materials. Metallic or other special formulations and/or materials are not available. A color chip must be provided to CNH for non CNH colors. A minimum lead time of 8 business weeks will be required prior to production. Unless specified, regular production decals will be applied. Requests can be made that decals not be applied. However, SAFETY decals MUST BE APPLIED in all cases. The following components remain CNH grey: lift & bucket cylinders, front coupler and attachments, ROPS, side screens, rear hood, upper chassis and control links, undercarriages and brackets.**			$3,213.00

TR270 T4 FINAL COMPACT TRACK LOADER
US PRICE LIST

(Ex Works Wichita, KS)

TELEMATICS

SD_K6450 TELEMATICS

		XK6450X	No Telematics			No Charge
		761187	CASE SiteWatch Telematics			$874.00

TR270 T4 FINAL COMPACT TRACK LOADER
US PRICE LIST

(Ex Works Wichita, KS)

Factory Supplied Attachments

Order Code			Description	Weight	Factory Data	List Price
Basic Attachments						
		735030006	Demo Rear Door Insert Not for use with TR270 Tier 4 Final	32 LB		$330.00
		735006006	Beacon Kit	1 LB		$165.00
		735007006	4-Corner LED Strobe Kit Must order connector. Reference dependency matrix.	24 LB		$536.00
		735159026	Heater Complete For use with Tier 3 Must order applicable harness. Reference dependency matrix.	137 LB		$1,472.00
		735159046	Heater Complete For use with Tier 4 Must order applicable harness. Reference dependency matrix.	141 LB		$1,472.00
		735158036	HVAC Complete For use with Tier 3 Must order applicable harness. Reference dependency matrix.	342 LB		$3,162.00
		735158106	HVAC Complete For use with Tier 4 Must order applicable harness. Reference dependency matrix.	332 LB		$3,162.00
		735146006	Three Point Seat Belt	4 LB		$250.00
		735011006	Glass Front Door Kit Center mounted wiper Requires three point seat belt. Must order applicable harness. Reference dependency matrix.	182 LB		$1,653.00
		735012006	Demo Front Door Kit Center mounted wiper Requires three point seat belt. Must order applicable harness. Reference dependency matrix.	182 LB		$2,905.00
		735013006	Cab Side Windows Kit	139 LB		$927.00
		735016006	Radio Kit Must order applicable harness. Reference dependency matrix.	16 LB		$443.00
		735150006	Open Cab Interior Trim Kit For use with Open Cab. Covers interior sides and rear.	20 LB		$399.00
		735020066	Road Light Kit Must order applicable harness. Reference dependency matrix.	111 LB		$649.00
		735124006	Side Lamp Kit	6 LB		$272.00
		735021006	Multi-Function Front Electrical Mech Kit For use with TR270 and TR320 Must order applicable handle. Reference dependency martix.	11 LB		$294.00
		735125006	Multi-Function Front Electrical E-H Kit For use with TR270 and TR320 Must order applicable handle. Reference dependency matrix.	11 LB		$294.00
		735022046	One Way Self Level Kit For use with TR270 and TR320	15 LB		$520.00
		735023006	Ride Control Kit Must order applicable handle. Reference dependency martix.	33 LB		$515.00
		735024006	Hydraulic Coupler Kit For use with TR270 and TR320 (units built PRIOR to S/N NDM462749 Must order applicable harness. Reference dependency matrix.	160 LB		$1,324.00

TR270 T4 FINAL COMPACT TRACK LOADER
US PRICE LIST

(Ex Works Wichita, KS)

		735025016	High Flow Auxiliary Kit For use with Tier 3 Must order applicable harness. Reference dependency matrix.	189 LB		$2,699.00
		735025076	High Flow Auxiliary Kit For use with Tier 4 Must order applicable harness. Reference dependency matrix.	191 LB		$2,699.00
		735027016	Second Hydraulic Front Auxiliary Kit Must order applicable handle. Reference dependency matrix.	81 LB		$1,103.00
		735036016	4-Point Lift Hook Kit	11 LB		$238.00
		735037016	Single Point Lift Hook Kit	284 LB		$1,102.00
		735038006	FOPS Level 2 Modification Kit	61 LB		$368.00
		735039016	Extra Counterweight Kit	202 LB		$443.00
		735040146	Aspirator Kit For use with Tier 4	14 LB		$340.00
		735040026	Aspirator Kit For use with Tier 3	12 LB		$340.00
		735042006	Interior Mirror Kit	4 LB		$62.00
		735045006	Foot Control Conversion Kit For use with Tier 3	54 LB		$659.00
		735045046	Foot Control Conversion Kit For use with Tier 4	52 LB		$659.00
		735046016	Hand Control Conversion Kit For use with Tier 3	76 LB		$883.00
		735046046	Hand Control Conversion Kit For use with Tier 4	76 LB		$883.00
		735047006	120V Block Heater Kit	6 LB		$221.00
		735048006	220V Block Heater Kit	6 LB		$221.00
		735142006	Cylinder Guard Kit	21 LB		$792.00
		735151026	Debris Seal Kit Reduces debris ingression to engine compartment and chassis For use with models built July 2012 or later	20 LB		$361.00
		735152026	New Hood with Debris Seal Kit Contains new hood and additional sealing items Reduces debris ingression to engine compartment and chassis For use with TIER 3 models built prior to July 2012 ONLY	128 LB		$800.00
		735161006	Heavy Duty Front Lights - Radial Model For use with Radial Models	26 LB		$429.00

Handles - E-H Models

		735126006	LH EH Handle Kit (NO 2nd Aux) Adds Front Electric.	2 LB		$191.00
		735127006	RH EH Handle Kit Adds Front Electric.	2 LB		$191.00
		735132006	LH EH Handle Kit (WITH 2nd Aux) Adds Second Auxiliary with Front Electric.	2 LB		$191.00

Handles - Mechanical Models

		735134006	LH Mechanical Handle Kit (NO 2nd Aux) Adds Front Electric.	2 LB		$191.00
		735135006	LH Mechanical Handle Kit (WITH 2nd Aux) Adds Second Auxiliary with Front Electric.	2 LB		$191.00
		735136006	RH Mechanical Handle Kit Adds Front Electric.	2 LB		$191.00

TR270 T4 FINAL COMPACT TRACK LOADER
US PRICE LIST

(Ex Works Wichita, KS)

Pallet Fork

		735075006	Pallet Fork Frame w/48" Tines	540 LB		$1,355.00

Dirt & Foundry Bucket

		735055016	72" Dirt & Foundry Bucket (1829 mm), 16.7 cu. ft. Heaped Capacity	407 LB		$1,071.00
		735056016	78" Dirt & Foundry Bucket (1981 mm), 18.4 cu. ft. Heaped Capacity	429 LB		$1,112.00

Low Profile Bucket

		735059016	72" Low Profile Bucket (1829 mm), 14.5 cu. ft. Heaped Capacity	471 LB		$968.00

Low Profile Extended Bucket

		735062016	72" Low Profile Extended Bucket (1829 mm), 17.1 cu. ft. Heaped Capacity	504 LB		$1,076.00
		735063016	78" Low Profile Extended Bucket (1981 mm), 18.6 cu. ft. Heaped Capacity	531 LB		$1,164.00
		735064016	84" Low Profile Extended Bucket (2134 mm), 20.2 cu. ft. Heaped Capacity	607 LB		$1,257.00

Light Material Bucket

		735066016	72" Light Material Bucket (1829 mm), 23.7 cu. ft. Heaped Capacity	466 LB		$901.00
		735067016	84" Light Material Bucket (2134 mm), 27.9 cu. ft. Heaped Capacity	532 LB		$1,051.00

Manure & Slurry Bucket

		735069016	72" Manure-Slurry Bucket (1829 mm), 19.1 cu. ft. Heaped Capacity	469 LB		$917.00
		735070016	84" Manure-Slurry Bucket (2134 mm), 22.5 cu. ft. Heaped Capacity	535 LB		$1,066.00

Heavy Duty Dirt Bucket

		735072016	72" Heavy Duty Dirt Bucket (1829 mm), 14.6 cu. ft. Heaped Capacity	501 LB		$1,329.00
		735073016	78" Heavy Duty Dirt Bucket (1981 mm), 15.9 cu. ft. Heaped Capacity	526 LB		$1,442.00
		735074016	84" Heavy Duty Dirt Bucket (2134 mm), 19.4 cu. ft. Heaped Capacity	550 LB		$1,550.00

TR310 T4 FINAL COMPACT TRACK LOADERS
US PRICE LIST

(Ex Works Wichita, KS)

Standard Equipment

ENGINE:
- FPT F5HFL463A water cooled diesel engine
- 207 CID (3.4 L) Turbo
- Tier 4 Final Certified
- Particulate Matter Catalyst
- High Pressure Common Rail (HPCR) Fuel Injection
- Horsepower:
  - Gross 74
  - Net 68
  - Peak torque 232 lb-ft (314 Nm)
- 120 amp alternator
- Air cleaner - dual element
- Organic Acid Technology (OAT) Anti-freeze solution to -34º F
- Fuel tank - 19.5 gal. (U.S.)
- Single Plane, Top and Bottom Oil Cooler/Radiator Configuration
- Maintenance-Free belt
- Glow Plugs
- Maintenance free 1000 CCA battery with master disconnect

OPERATOR'S PROTECTIVE STRUCTURE:
- ROPS/FOPS Level 1 canopy with side screens
- Control lockout system
- Tilt forward ROPS/FOPS
- Electric parking brake control
- Hand throttle
- Foot throttle
- Switchable (ISO - H) Electro Hydraulic Controls
- Operator's compartment floor cleanout
- Rear window with emergency escape
- Padded seat bar with integral arm rests
- Suspension Seat, vinyl with 2" retractable lap seat belt
- Foot rest
- Dome Light
- 12V Power plug socket
- Cup holder
- Tool Pocket

OPERATOR'S PROTECTIVE STRUCTURE (continued):
- Top window
- Headliner
- Alarm package (backup and horn)

HYDRAULICS:
- 6 micron oil filtration system
- 3 spool loader control valve
- Auxiliary hydraulics, Proportional thumb wheel activated: loader arm mounted with ISO specification flat face "connect-under-pressure" disconnects
  - Including case drain
- Heavy duty hydraulic oil cooler
- Loader arm float position
- Auxiliary hydraulic function lockout override
- Loader arm circuit lockout override
- Self Level
- Ride Control

LOADER:
- Mechanical attachment coupler
- Radial arm geometry
- Loader lift arm support strut
- SAE operating load:
  - 3100 lbs. at 50%
  - 2170 lbs. at 35%
- Tipping load: 6200 lbs.

INSTRUMENTATION:
- Advanced Instrument Cluster with
  - Hour meter
  - Tachometer
  - Fuel gauge
  - Hydraulic oil temperature gauge
  - Engine coolant temperature gauge
  - Diagnostic features
  - Security lock-out
- Warning lights with alarms:
  - Critical system stop
  - Engine system
  - Hydraulic system

TR310 T4 FINAL COMPACT TRACK LOADERS
US PRICE LIST

(Ex Works Wichita, KS)

Standard Equipment

INSTRUMENTATION (continued):
- Electrical and diagnostic system
- Warning alarms:
  - Battery voltage (plus display)
  - Engine oil service
- Indicator Light:
  - Engine preheat, Parking brake,
  - Seat bar reminder

TRACK SYSTEM:
- Electro Hydraulic Controlled Hydrostatic 2-speed planetary final drive
- Positive drive imbedded steel rubber track belt
- Spring applied hydraulic release (SAHR) disc parking brake
- Dynamic braking

UNDERCARRIAGE:
- Undercarriage hose covers
- Rigid track frame mounting
- Permanently sealed (duo cone face seal) & lubricated idlers and rollers
- Triple flange lower rollers
- Single flange front and rear idlers
- Hydraulic track adjustment
- Track recoil spring
- Tapered track frame cover

OTHER STANDARD FEATURES:
- Lights - 2 front, 2 side, 2 rear flood (halogen)
- Heavy Duty Front Lights
- Pre-wired for rotating beacon
- Service access hood, lockable
- Single point daily service
- Tail lights
- Option Harness
- Remote oil drain
- Remote Oil and Fuel Filters
- Debris Ingression Prevention Sealing
- Block Heater

TR310 T4 FINAL COMPACT TRACK LOADERS
US PRICE LIST

(Ex Works Wichita, KS)

Models

COMMERCIAL MODEL	Weight	Factory Data	List Price
TR310 T4 FINAL	9,630 LB		$63,912.00

TR310 T4 FINAL COMPACT TRACK LOADERS
US PRICE LIST

(Ex Works Wichita, KS)

Factory Supplied Options

Order Code	Description	Weight	Factory Data	List Price

CONTROLS AND TRANSMISSION

SD_01100 CONTROLS LEVEL

		761029	2 Speed Mechanical Controls **H-Pattern**			($2,245.00)
		761031	2 Speed E-H Controls **Electro-Hydraulic Switchable (ISO-H Pattern) Controls with Two Speed**			No Charge

ROPS/CAB

SD_05009 CAB

		761043	Open Cab (No Heat or HVAC) **with top window and keyed start**			No Charge
		761046	Enclosed Cab with Heater **Includes side windows, front glass door with wiper, shoulder belt, radio with speakers and keyless start**			$4,474.00
		761045	Enclosed Cab with Heater & AC **Includes side windows, front glass door with wiper, shoulder belt, radio with speakers and keyless start**			$6,069.00
		761184	Enclosed Cab w/Heat -Demo Door **Includes side windows, 1/2" polycarbonate front glass door with wiper, shoulder belt, radio with speakers and keyless start**			$6,383.00
		761183	Enclosed Cab w/HVAC -Demo Door **Includes side windows, 1/2" polycarbonate front glass door with wiper, shoulder belt, radio with speakers and keyless start**			$7,977.00

SD_05016 OPEN CAB TRIM

		X05016X	No Open Cab Interior Trim Pkg			No Charge
		761186	Open Cab Interior Trim Package **For use with Open Cab. Covers interior sides and rear.**			$330.00

SD_05185 CAB SEAT

		761052	Suspension Seat (Vinyl)			No Charge
		761062	Air Ride Suspension Seat **(Fabric) with temperature control** **(may not be ordered with Open Cab option 761043)**			$644.00

TR310 T4 FINAL COMPACT TRACK LOADERS
US PRICE LIST

(Ex Works Wichita, KS)

SD_K6480 HEAVY DUTY FRONT LIGHTS

		XK6480X	No Heavy Duty Front Lights			($100.00)
		761201	Heavy Duty Front Lights			No Charge

COUPLER

SD_K5101 COUPLERS

		726003	Manual Coupler			No Charge
		726004	Hydraulic Coupler			$1,126.00

BLOCK HEATER

SD_02086 BLOCK HEATER

		X02086X	No Block Heater			($125.00)
		761048	Block Heater (120V)			No Charge

OPERATOR MANUALS

SD_32035 LANGUAGE OPTIONS

		761085	English USA			No Charge
		761088	French Canadian			No Charge
		761097	Spanish Latin American			No Charge

OPTIONAL PACKAGES

SD_01201 OPTION PACKAGES

		761032	Standard Equipment Only			($950.00)
		761034	Front Electric/Multi-Function **Contains Front Electric (Multi-function) for Standard Auxiliaries**			($587.00)
		761033	Performance Package **Contains ON/OFF One-way Self Leveling and Ride Control**			No Charge
		761035	Performance w/Front Electric **Contains ON/OFF One-way Self Leveling, Ride Control, and Front Electric**			$669.00
		761036	High Flow Package **Contains High Flow Hydraulics with Front Electric**			$1,421.00
		761037	High Flow Plus Package **Contains Front Electric, High Flow Hydraulics, ON/OFF One-way Self Leveling and Ride Control**			$2,678.00

TR310 T4 FINAL COMPACT TRACK LOADERS
US PRICE LIST

(Ex Works Wichita, KS)

		761039	Enhanced High Flow Package **Only available with units equipped with EH Controls** **Contains 40100 PSI High Flow Hydraulics, second auxiliaries, front electric, high flow hydraulics, ON/OFF One-way self leveling and ride control**			$6,181.00

TRACK BELT OPTIONS

SD_10015 TRACK OPTIONS

		8500157	400 mm (15.7 inch) **74" OW**			No Charge

SD_39100 HEAVY DUTY TRACK COVERS

		X39100X	No Undercarriage Hose Covers			($100.00)
		761204	Undercarriage Hose Covers			No Charge

FRONT ATTACHMENTS

BUCKETS

SD_K5231 BUCKETS

		XK5231X	No Bucket			No Charge
		Dirt & Foundry Bucket				
		761126	78" Dirt & Foundry Bucket **1981 mm, 18.4 cu. ft. Heaped Capacity**			$1,112.00
		Heavy Duty Dirt Bucket				
		761143	78" Heavy Duty Dirt Bucket **1981 mm, 15.9 cu. ft. Heaped Capacity**			$1,442.00
		761144	84" Heavy Duty Dirt Bucket **2134 mm, 19.4 cu. ft. Heaped Capacity**			$1,550.00
		Light Material Bucket				
		761137	84" Light Material Bucket **2134 mm, 27.9 cu. ft. Heaped Capacity**			$1,051.00
		Low Profile Extended Bucket				
		761133	78" Low Profile Extended **1981 mm, 18.6 cu. ft. Heaped Capacity**			$1,164.00
		761134	84" Low Profile Extended **2134 mm, 20.2 cu. ft. Heaped Capacity**			$1,257.00
		Manure & Slurry Bucket				
		761140	84" Manure-Slurry Bucket **2134 mm, 22.5 cu. ft. Heaped Capacity**			$1,066.00

SPILL GUARDS

SD_K5400 SPILL GUARDS

		XK5400X	No Spill Guard			No Charge

TR310 T4 FINAL COMPACT TRACK LOADERS
US PRICE LIST

(Ex Works Wichita, KS)

		761178	78" Spill Guard **For use with Heavy Duty Buckets only**			$237.00
		761179	84" Spill Guard **For use with Heavy Duty Buckets only**			$252.00

BOLT ON CUTTING EDGES

SD_K6399 BOLT ON CUTTING EDGE

		XK6399X	No Bolt on Cutting Edge			No Charge
		761148	78" Bolt on Cutting Edge			$278.00
		761149	84" Bolt on Cutting Edge			$299.00

MOVE TO BIC

SD_K6440 OFF-SITE SERVICE

		XK6440X	No Offsite Service Arrangement			No Charge
		761175	Offsite Service Arrangement			No Charge

SPECIAL PAINT

SD_50103 SPECIAL PAINT

		X50103X	No Special Paint			No Charge
		726029	Special Paint **The price listed is for a color change only from the standard factory color: CNH #86609760 (MS42-Tan). All Special Color formulations will be applied using approved factory processes and materials. Metallic or other special formulations and/or materials are not available. A color chip must be provided to CNH for non CNH colors. A minimum lead time of 8 business weeks will be required prior to production. Unless specified, regular production decals will be applied. Requests can be made that decals not be applied. However, SAFETY decals MUST BE APPLIED in all cases. The following components remain CNH grey: lift & bucket cylinders, front coupler and attachments, ROPS, side screens, rear hood, upper chassis and control links, undercarriages and brackets.**			$3,213.00

TELEMATICS

SD_K6450 TELEMATICS

		XK6450X	No Telematics			No Charge
		761187	CASE SiteWatch Telematics			$874.00

TR310 T4 FINAL COMPACT TRACK LOADERS
US PRICE LIST

(Ex Works Wichita, KS)

Factory Supplied Attachments

Order Code			Description	Weight	Factory Data	List Price
Basic Attachments						
		735030006	Demo Rear Door Insert	32 LB		$330.00
		735006006	Beacon Kit	1 LB		$165.00
		735007006	4-Corner LED Strobe Kit Must order connector. Reference dependency matrix.	24 LB		$536.00
		735159046	Heater Complete For use with TR310 Tier 4 Final, TR320 Tier 4 Interim and TV380 Tier 4 Interim Must order applicable harness. Reference dependency matrix.	141 LB		$1,472.00
		735158106	HVAC Complete Must order applicable harness. Reference dependency matrix.	332 LB		$3,162.00
		735146006	Three Point Seat Belt	4 LB		$250.00
		735011006	Glass Front Door Kit Center mounted wiper Requires three point seat belt. Must order applicable harness. Reference dependency matrix.	182 LB		$1,653.00
		735012006	Demo Front Door Kit Center mounted wiper Requires three point seat belt. Must order applicable harness. Reference dependency matrix.	182 LB		$2,905.00
		735013006	Cab Side Windows Kit	139 LB		$927.00
		735016006	Radio Kit Must order applicable harness. Reference dependency matrix.	16 LB		$443.00
		735150006	Open Cab Interior Trim Kit For use with Open Cab. Covers interior sides and rear.	20 LB		$399.00
		735020066	Road Light Kit Must order applicable harness. Reference dependency matrix.	111 LB		$649.00
		735124006	Side Lamp Kit	6 LB		$272.00
		735021006	Multi-Function Front Electrical Mech Kit For use with TR310 Tier 4 Final and TR320 Tier 3 and Tier 4 Interim Must order applicable handle. Reference dependency matrix.	11 LB		$294.00
		735125006	Multi-Function Front Electrical E-H Kit For use with TR310 Tier 4 Final, TR320 Tier 3 and Tier 4 Interim Must order applicable handle. Reference dependency matrix.	11 LB		$294.00
		735022046	One Way Self Level Kit For use with TR310 Tier 4 Final, TR320 Tier 3, TR320 Tier 4 Interim and TR340 Tier 4 Final	15 LB		$520.00
		735023006	Ride Control Kit Must order applicable handle. Reference dependency martix.	33 LB		$515.00
		735024006	Hydraulic Coupler Kit For use with TR310 Tier 4 Final, TR320 Tier 3 and Tier 4 Interim Must order applicable harness. Reference dependency matrix.	160 LB		$1,324.00
		735025076	High Flow Auxiliary Kit Must order applicable harness. Reference dependency matrix.	191 LB		$2,699.00
		735027016	Second Hydraulic Front Auxiliary Kit Must order applicable handle. Reference dependency matrix.	81 LB		$1,103.00
		735036016	4-Point Lift Hook Kit	11 LB		$238.00

CASE CONSTRUCTION

TR310 T4 FINAL COMPACT TRACK LOADERS
US PRICE LIST

(Ex Works Wichita, KS)

		735037016	Single Point Lift Hook Kit	284 LB		$1,102.00
		735038006	FOPS Level 2 Modification Kit	61 LB		$368.00
		735039016	Extra Counterweight Kit	202 LB		$443.00
		735040146	Aspirator Kit	14 LB		$340.00
		735042006	Interior Mirror Kit	4 LB		$62.00
		735045046	Foot Control Conversion Kit	52 LB		$659.00
		735046046	Hand Control Conversion Kit	76 LB		$883.00
		735047006	120V Block Heater Kit	6 LB		$221.00
		735048006	220V Block Heater Kit	6 LB		$221.00
		735142006	Cylinder Guard Kit	21 LB		$792.00
		735151026	Debris Seal Kit Reduces debris ingression to engine compartment and chassis For use with models built July 2012 or later	20 LB		$361.00
		735161006	Heavy Duty Front Lights - Radial Model For use with TR310 Tier 4 Final, TR320 Tier 3 and Tier 4 Interim	26 LB		$429.00

Handles - E-H Models

		735126006	LH EH Handle Kit (NO 2nd Aux) Adds Front Electric.	2 LB		$191.00
		735127006	RH EH Handle Kit Adds Front Electric.	2 LB		$191.00
		735132006	LH EH Handle Kit (WITH 2nd Aux) Adds Second Auxiliary with Front Electric.	2 LB		$191.00

Handles - Mechanical Models

		735134006	LH Mechanical Handle Kit (NO 2nd Aux) Adds Front Electric.	2 LB		$191.00
		735135006	LH Mechanical Handle Kit (WITH 2nd Aux) Adds Second Auxiliary with Front Electric.	2 LB		$191.00
		735136006	RH Mechanical Handle Kit Adds Front Electric.	2 LB		$191.00

Pallet Fork

		735075006	Pallet Fork Frame w/48" Tines	540 LB		$1,355.00

Dirt & Foundry Bucket

		735055016	72" Dirt & Foundry Bucket (1829 mm), 16.7 cu. ft. Heaped Capacity	407 LB		$1,071.00
		735056016	78" Dirt & Foundry Bucket (1981 mm), 18.4 cu. ft. Heaped Capacity	429 LB		$1,112.00

Low Profile Bucket

		735059016	72" Low Profile Bucket (1829 mm), 14.5 cu. ft. Heaped Capacity	471 LB		$968.00

Low Profile Extended Bucket

		735062016	72" Low Profile Extended Bucket (1829 mm), 17.1 cu. ft. Heaped Capacity	504 LB		$1,076.00
		735063016	78" Low Profile Extended Bucket (1981 mm), 18.6 cu. ft. Heaped Capacity	531 LB		$1,164.00
		735064016	84" Low Profile Extended Bucket (2134 mm), 20.2 cu. ft. Heaped Capacity	607 LB		$1,257.00

TR310 T4 FINAL COMPACT TRACK LOADERS
US PRICE LIST

(Ex Works Wichita, KS)

Light Material Bucket

		735066016	72" Light Material Bucket (1829 mm), 23.7 cu. ft. Heaped Capacity	466 LB		$901.00
		735067016	84" Light Material Bucket (2134 mm), 27.9 cu. ft. Heaped Capacity	532 LB		$1,051.00

Manure & Slurry Bucket

		735069016	72" Manure-Slurry Bucket (1829 mm), 19.1 cu. ft. Heaped Capacity	469 LB		$917.00
		735070016	84" Manure-Slurry Bucket (2134 mm), 22.5 cu. ft. Heaped Capacity	535 LB		$1,066.00

Heavy Duty Dirt Bucket

		735072016	72" Heavy Duty Dirt Bucket (1829 mm), 14.6 cu. ft. Heaped Capacity	501 LB		$1,329.00
		735073016	78" Heavy Duty Dirt Bucket (1981 mm), 15.9 cu. ft. Heaped Capacity	526 LB		$1,442.00
		735074016	84" Heavy Duty Dirt Bucket (2134 mm), 19.4 cu. ft. Heaped Capacity	550 LB		$1,550.00

TR320 & TV380 T4 INTERIM
US PRICE LIST

(Ex Works Wichita, KS)

Standard Equipment

ENGINE:
- FPT F5HFL413L water-cooled diesel engine
- 207 CID (3.4L) Turbo
- Tier 4 Interim Certified
- High Pressure Common Rail (HPCR) Fuel Injection
- Diesel Particulate Filter (DPF)
- Horsepower:
  - Gross 90
  - Net 84
  - Peak torque 282 lb-ft (383 Nm)
- 120 amp alternator
- Air cleaner - dual element
- Anti-freeze solution to -34° F
- Fuel tank - 25.5 gal. (US)
- 3-stack after cooler/radiator/ oil cool configuration
- Glow Plugs
- Maintenance free 1000 CCA battery with master electrical disconnect

OPERATOR'S PROTECTIVE STRUCTURE:
- Enclosed Cab with Heater and AC
- Control lockout system
- Tilt forward ROPS/FOPS
- Electric parking brake control
- Hand throttle
- Foot throttle
- Switchable (H - ISO) Electro Hydraulic (EH) controls (only on EH models)
- Proportional auxiliary hydraulic control
- Operator's compartment floor cleanout
- Rear window with emergency escape
- Padded seat bar with integral arm rests
- Air Suspension Seat with 2" retractable lap seat belt
- Foot rest
- Dome Light
- 12V Power plug socket

OPERATOR'S PROTECTIVE STRUCTURE (Continued):
- Cup holder
- Tool Pocket
- Top window
- Headliner
- Alarm package (backup and horn)

HYDRAULICS:
- 6 micron oil filtration system
- 3 spool loader control valve
- Auxiliary hydraulics, Proportional thumb wheel activated: loader arm mounted with ISO specification flat face "connect-under-pressure" disconnects including case drain
- Heavy duty hydraulic oil cooler
- Loader arm float position
- Auxiliary hydraulic function lockout override
- Loader arm circuit lockout override
- Self Level
- Ride Control

LOADER (TR320):
- Heavy Duty Hydraulic attachment coupler
- Radial arm geometry
- Loader lift arm support strut
- SAE operating load:
  - 3200 lbs. at 50%
  - 2240 lbs. at 35%
- Tipping load: 6400 lbs.

LOADER (TV380):
- Heavy Duty Hydraulic attachment coupler
- Vertical Lift Arm geometry
- In-cab Loader Lock
- SAE operating load:
  - 3800 lbs. at 50%
  - 2660 lbs. at 35%
- Tipping load: 7600 lbs.

TR320 & TV380 T4 INTERIM
US PRICE LIST

(Ex Works Wichita, KS)

Standard Equipment

INSTRUMENTATION:
- Advanced Instrument Cluster with
  - Hour meter
  - Tachometer
  - Fuel gauge
  - Hydraulic oil temperature gauge
  - Engine coolant temperature gauge
  - Diagnostic features
  - Security lock-out
- Warning lights with alarms:
  - Critical system stop
  - Engine system
  - Hydraulic system
  - Electrical and diagnostic system
- Warning alarms:
  - Battery voltage (plus display)
  - Diesel particulate filter (DPF)
  - Engine oil service
- Indicator Light:
  - Engine preheat, Parking brake, Seat bar reminder

TRACK SYSTEM:
- Electro Hydraulic Controlled Hydrostatic 2-speed planetary final drive
- Positive drive imbedded steel rubber track belt
- Spring applied hydraulic release (SAHR) disc parking brake
- Dynamic braking

UNDERCARRIAGE:
- Undercarriage Hose Covers
- Rigid track frame mounting
- Permanently sealed (duo cone face seal) & lubricated idlers and rollers
- Triple flange lower rollers
- Single flange front and rear idlers
- Hydraulic track adjustment
- Track recoil spring
- Tapered track frame cover

OTHER STANDARD FEATURES:
- Lights - 2 front, 2 side, 2 rear flood (halogen)
- Heavy Duty Front Lights
- Pre-wired for rotating beacon
- Service access hood, lockable
- Single point daily service
- Tail lights
- Option Harness
- Remote oil drain
- Remote oil and fuel filters
- Block Heater

TR320 & TV380 T4 INTERIM
US PRICE LIST

(Ex Works Wichita, KS)

Models

COMMERCIAL MODEL	Weight	Factory Data	List Price
TR320-T4 INTERIM	9,265 LB		$81,326.00
TV380-T4 INTERIM	9,865 LB		$86,752.00

TR320 & TV380 T4 INTERIM
US PRICE LIST

(Ex Works Wichita, KS)

Factory Supplied Options

Order Code	Description	Weight	Factory Data	List Price

CONTROLS AND TRANSMISSION

SD_01100 CONTROLS LEVEL

		761029	2 Speed Mechanical Controls **H-Pattern**			($2,245.00)
		761031	2 Speed E-H Controls **Electro-Hydraulic Switchable (ISO-H Pattern) Controls with Two Speed**			No Charge

ROPS/CAB

SD_05009 CAB

		761043	Open Cab (No Heat or HVAC) **with top window and keyed start**			($5,700.00)
		761046	Enclosed Cab with Heater **Includes side windows, front glass door with wiper, shoulder belt, radio with speakers, and keyless start**			($1,500.00)
		761045	Enclosed Cab with Heater & AC **Includes side windows, front glass door with wiper, shoulder belt, radio with speakers, and keyless start**			No Charge
		761184	Enclosed Cab w/Heat -Demo Door **Includes side windows, 1/2" polycarbonate front glass door with wiper, shoulder belt, radio with speakers, and keyless start**			$314.00
		761183	Enclosed Cab w/HVAC -Demo Door **Includes side windows, 1/2" polycarbonate front glass door with wiper, shoulder belt, radio with speakers, and keyless start**			$1,908.00

SD_05016 OPEN CAB TRIM

		X05016X	No Open Cab Interior Trim Pkg			No Charge
		761186	Open Cab Interior Trim Package **For use with Open Cab. Covers interior sides and rear.**			$330.00

SD_05185 CAB SEAT

		761052	Suspension Seat (Vinyl)			($624.00)
		761062	Air Ride Suspension Seat **(Fabric) with temperature control** **(may not be ordered with Open Cab option 761043)**			No Charge

TR320 & TV380 T4 INTERIM
US PRICE LIST

(Ex Works Wichita, KS)

SD_K6480 HEAVY DUTY FRONT LIGHTS

		XK6480X	No Heavy Duty Front Lights			($100.00)
		761201	Heavy Duty Front Lights			No Charge

REAR DOOR

SD_39021 REAR DOOR

		761075	Rear Door			No Charge
		761205	Heavy Duty Rear Door			$471.00

COUPLER

SD_K5101 COUPLERS

		726003	Manual Coupler			($1,100.00)
		761206	Heavy Duty Hydraulic Coupler			No Charge

BLOCK HEATER

SD_02086 BLOCK HEATER

		X02086X	No Block Heater			($125.00)
		761048	Block Heater (120V)			No Charge

OPERATOR MANUALS

SD_32035 LANGUAGE OPTIONS

		761085	English USA			No Charge
		761088	French Canadian			No Charge
		761097	Spanish Latin American			No Charge

OPTIONAL PACKAGES

SD_01201 OPTION PACKAGES

		761032	Standard Equipment Only			($950.00)
		761034	Front Electric/Multi-Function **Contains Front Electric (Multi-function) for Standard Auxiliaries**			($587.00)
		761033	Performance Package **Contains ON/OFF One-way Self Leveling and Ride Control**			No Charge
		761035	Performance w/Front Electric **Contains ON/OFF One-Way Self Leveling, Ride Control, and Front Electric**			$669.00

TR320 & TV380 T4 INTERIM
US PRICE LIST

(Ex Works Wichita, KS)

		761036	High Flow Package **Contains High Flow Hydraulics with Front Electric**			$1,421.00
		761037	High Flow Plus Package **Contains Front Electric, High Flow Hydraulics,** **ON/OFF One-way Self Leveling and Ride Control**			$2,678.00
		761039	Enhanced High Flow Package **Only available with units equipped with EH Controls** **Contains 4000 PSI High Flow Hydraulics, second auxiliaries,** **front electric, high flow hydraulics, ON/OFF One-way self leveling** **and ride control**			$6,181.00

TRACK BELT OPTIONS

SD_10015 TRACK OPTIONS

		8500147	450 mm (17.7 inch) **78" OTW**			No Charge

SD_39100 HEAVY DUTY TRACK COVERS

		X39100X	No Undercarriage Hose Covers			($100.00)
		761204	Undercarriage Hose Covers			No Charge

FRONT ATTACHMENTS

BUCKETS

SD_K5231 BUCKETS

		XK5231X	No Bucket			No Charge
		Dirt & Foundry Bucket				
		761126	78" Dirt & Foundry Bucket **1981 mm, 18.4 cu. ft. Heaped Capacity**			$1,112.00
		Heavy Duty Dirt Bucket				
		761143	78" Heavy Duty Dirt Bucket **1981 mm, 15.9 cu. ft. Heaped Capacity**			$1,442.00
		761144	84" Heavy Duty Dirt Bucket **2134 mm, 19.4 cu. ft. Heaped Capacity**			$1,550.00
		Light Material Bucket				
		761137	84" Light Material Bucket **2134 mm, 27.9 cu. ft. Heaped Capacity**			$1,051.00
		Low Profile Extended Bucket				
		761133	78" Low Profile Extended **1981 mm, 18.6 cu. ft. Heaped Capacity**			$1,164.00
		761134	84" Low Profile Extended **2134 mm, 20.2 cu. ft. Heaped Capacity**			$1,257.00
		Manure & Slurry Bucket				
		761140	84" Manure-Slurry Bucket **2134 mm, 22.5 cu. ft. Heaped Capacity**			$1,066.00

TR320 & TV380 T4 INTERIM
US PRICE LIST

(Ex Works Wichita, KS)

SPILL GUARDS

SD_K5400 SPILL GUARDS

		XK5400X	No Spill Guard			No Charge
		761178	78" Spill Guard **For use with Heavy Duty Buckets only**			$237.00
		761179	84" Spill Guard **For use with Heavy Duty Buckets only**			$252.00

BOLT ON CUTTING EDGES

SD_K6399 BOLT ON CUTTING EDGE

		XK6399X	No Bolt on Cutting Edge			No Charge
		761148	78" Bolt on Cutting Edge			$278.00
		761149	84" Bolt on Cutting Edge			$299.00

MOVE TO BIC

SD_K6440 OFF-SITE SERVICE

		XK6440X	No Offsite Service Arrangement			No Charge
		761175	Offsite Service Arrangement			No Charge

SPECIAL PAINT

SD_50103 SPECIAL PAINT

		X50103X	No Special Paint			No Charge
		726029	Special Paint **The price listed is for a color change only from the standard factory color: CNH #86609760 (MS42-Tan). All Special Color formulations will be applied using approved factory processes and materials. Metallic or other special formulations and/or materials are not available. A color chip must be provided to CNH for non CNH colors. A minimum lead time of 8 business weeks will be required prior to production. Unless specified, regular production decals will be applied. Requests can be made that decals not be applied. However, SAFETY decals MUST BE APPLIED in all cases. The following components remain CNH grey: lift & bucket cylinders, front coupler and attachments, ROPS, side screens, rear hood, upper chassis and control links, undercarriages and brackets.**			$3,213.00

TR320 & TV380 T4 INTERIM
US PRICE LIST

(Ex Works Wichita, KS)

TELEMATICS

SD_K6450 TELEMATICS

		XK6450X	No Telematics			No Charge
		761187	CASE SiteWatch Telematics			$874.00

TR320 & TV380 T4 INTERIM
US PRICE LIST

(Ex Works Wichita, KS)

Factory Supplied Attachments

Order Code			Description	Weight	Factory Data	List Price
Basic Attachments						
		735030006	Demo Rear Door Insert Not for use with TR270 Tier 4 Final	32 LB		$330.00
		735006006	Beacon Kit	1 LB		$165.00
		735007006	4-Corner LED Strobe Kit Must order connector. Reference dependency matrix.	24 LB		$536.00
		735159026	Heater Complete For use with Tier 3 Must order applicable harness. Reference dependency matrix.	137 LB		$1,472.00
		735159046	Heater Complete For use with Tier 4 Must order applicable harness. Reference dependency matrix.	141 LB		$1,472.00
		735158056	HVAC Complete For use with TR320 Tier 3 Must order applicable harness. Reference dependency matrix.	379 LB		$3,162.00
		735158066	HVAC Complete For use with TV380 Tier 3 Must order applicable harness. Reference dependency matrix.	383 LB		$3,162.00
		735158146	HVAC Complete For use with TR320 Tier 4 Must order applicable harness. Reference dependency matrix.	384 LB		$3,162.00
		735158156	HVAC Complete For use with TV380 Tier 4 Must order applicable harness. Reference dependency matrix.	381 LB		$3,162.00
		735146006	Three Point Seat Belt	4 LB		$250.00
		735011006	Glass Front Door Kit Center mounted wiper Requires three point seat belt. Must order applicable harness. Reference dependency matrix.	182 LB		$1,653.00
		735012006	Demo Front Door Kit Center mounted wiper Requires three point seat belt. Must order applicable harness. Reference dependency matrix.	182 LB		$2,905.00
		735013006	Cab Side Windows Kit	139 LB		$927.00
		735016006	Radio Kit Must order applicable harness. Reference dependency matrix.	16 LB		$443.00
		735150006	Open Cab Interior Trim Kit For use with Open Cab. Covers interior sides and rear.	20 LB		$399.00
		735020016	Road Light Kit For use with TR320 Must order applicable harness. Reference dependency matrix.	111 LB		$649.00
		735020026	Road Light Kit For use with TV380 Must order applicable harness. Reference dependency matrix.	111 LB		$649.00
		735124006	Side Lamp Kit	6 LB		$272.00
		735021006	Multi-Function Front Electrical Mech Kit For use with TR270 and TR320 Must order applicable handle. Reference dependency martix.	11 LB		$294.00

TR320 & TV380 T4 INTERIM
US PRICE LIST

(Ex Works Wichita, KS)

		735021016	Multi-Function Front Electrical Mech Kit For use with TV380 Must order applicable handle. Reference dependency martix.	11 LB		$294.00
		735125006	Multi-Function Front Electrical E-H Kit For use with TR270 and TR320 Must order applicable handle. Reference dependency matrix.	11 LB		$294.00
		735125016	Multi-Function Front Electrical E-H Kit For use with TV380 Must order applicable handle. Reference dependency matrix.	11 LB		$294.00
		735022046	One Way Self Level Kit For use with TR270 and TR320	15 LB		$520.00
		735022016	One Way Self Level Kit For use with TV380	14 LB		$520.00
		735023006	Ride Control Kit Must order applicable handle. Reference dependency martix.	33 LB		$515.00
		735024006	Hydraulic Coupler Kit For use with TR270 and TR320 (units built PRIOR to S/N NDM462749 Must order applicable harness. Reference dependency matrix.	160 LB		$1,324.00
		735024016	Hydraulic Coupler Kit For use with TV380 units built PRIOR to S/N NDM463769 Must order applicable harness. Reference dependency matrix.	159 LB		$1,324.00
		735024036	Hydraulic Coupler Kit For use with TR320 units built AFTER S/N NDM462750 Must order applicable harness. Reference dependency matrix.	151 LB		$1,441.00
		735024046	Hydraulic Coupler Kit For use with TV380 units built AFTER S/N NDM463770 Must order applicable harness. Reference dependency matrix.	152 LB		$1,441.00
		735025056	High Flow Auxiliary Kit For use with TR320 TIER 4 models ONLY. Must order applicable harness. Reference dependency matrix.	192 LB		$2,699.00
		735025066	High Flow Auxiliary Kit For use with TV380 TIER 4 models ONLY. Must order applicable harness. Reference dependency matrix.	191 LB		$2,699.00
		735025026	High Flow Auxiliary Kit For use with TV380 TIER 3 models ONLY. Must order applicable harness. Reference dependency matrix.	193 LB		$2,699.00
		735025036	High Flow Auxiliary Kit For use with TR320 TIER 3 models ONLY. Must order applicable harness. Reference dependency matrix.	190 LB		$2,699.00
		735027026	Second Hydraulic Front Auxiliary Kit For use with TV380 Must order applicable handle. Reference dependency martix.	86 LB		$1,103.00
		735027036	Second Hydraulic Front Auxiliary Kit For use with TR320 Must order applicable handle. Reference dependency martix.	84 LB		$1,103.00
		735036026	4-Point Lift Hook Kit	10 LB		$238.00
		735037006	Single Point Lift Hook Kit For use with TR320	289 LB		$1,102.00
		735037046	Single Point Lift Hook Kit For use with TV380	269 LB		$1,102.00
		735038006	FOPS Level 2 Modification Kit	61 LB		$368.00
		735039036	Extra Counterweight Kit	659 LB		$1,251.00

TR320 & TV380 T4 INTERIM
US PRICE LIST

(Ex Works Wichita, KS)

		735040066	Aspirator Kit For use with TV380 TIER 4 models ONLY.	15 LB		$340.00
		735040076	Aspirator Kit For use with TR320 TIER 4 models ONLY.	16 LB		$340.00
		735040036	Aspirator Kit For use with TV380 TIER 3 models ONLY.	13 LB		$340.00
		735040056	Aspirator Kit For use with TR320 TIER 3 models ONLY.	9 LB		$340.00
		735042006	Interior Mirror Kit	4 LB		$62.00
		735045006	Foot Control Conversion Kit For use with Tier 3	54 LB		$659.00
		735045046	Foot Control Conversion Kit For use with Tier 4	52 LB		$659.00
		735046026	Hand Control Conversion Kit For use with Tier 3 only	78 LB		$883.00
		735046056	Hand Control Conversion Kit For use with Tier 4 units built PRIOR to S/N NDM462807 (TR320) and NDM463824 (TV380)	77 LB		$883.00
		735046066	Hand Control Conversion Kit For use with Tier 4 units built AFTER S/N NDM462808 (TR320) and NDM463825 (TV380)	76 LB		$883.00
		735047006	120V Block Heater Kit	6 LB		$221.00
		735048006	220V Block Heater Kit	6 LB		$221.00
		735142006	Cylinder Guard Kit	21 LB		$792.00
		735151046	Debris Seal Kit Reduces debris ingression to engine compartment and chassis For use with TR320 models built July 2012 or later	23 LB		$253.00
		735151066	Debris Seal Kit Reduces debris ingression to engine compartment and chassis For use with TV380 models built July 2012 or later	17 LB		$283.00
		735152036	New Hood with Debris Seal Kit Contains new hood and additional sealing items Reduces debris ingression to engine compartment and chassis For use with TR320 TIER 3 models built prior to July 2012	124 LB		$749.00
		735152056	New Hood with Debris Seal Kit Contains new hood and additional sealing items Reduces debris ingression to engine compartment and chassis For use with TV380 TIER 3 models built prior to July 2012	109 LB		$901.00
		735161006	Heavy Duty Front Lights - Radial Model For use with Radial Models	26 LB		$429.00
		735161016	Heavy Duty Front Lights - Vertical Model For use with Vertical Models	26 LB		$429.00
		735163006	Heavy Duty Rear Door	140 LB		$769.00

Handles - E-H Models

		735126006	LH EH Handle Kit (NO 2nd Aux) Adds Front Electric.	2 LB		$191.00
		735127006	RH EH Handle Kit Adds Front Electric.	2 LB		$191.00
		735132006	LH EH Handle Kit (WITH 2nd Aux) Adds Second Auxiliary with Front Electric.	2 LB		$191.00

TR320 & TV380 T4 INTERIM
US PRICE LIST

(Ex Works Wichita, KS)

Handles - Mechanical Models

		735134006	LH Mechanical Handle Kit (NO 2nd Aux) Adds Front Electric.	2 LB		$191.00
		735135006	LH Mechanical Handle Kit (WITH 2nd Aux) Adds Second Auxiliary with Front Electric.	2 LB		$191.00
		735136006	RH Mechanical Handle Kit Adds Front Electric.	2 LB		$191.00

Pallet Fork

		735075006	Pallet Fork Frame w/48" Tines	540 LB		$1,355.00

Dirt & Foundry Bucket

		735056016	78" Dirt & Foundry Bucket (1981 mm), 18.4 cu. ft. Heaped Capacity	429 LB		$1,112.00

Low Profile Extended Bucket

		735063016	78" Low Profile Extended Bucket (1981 mm), 18.6 cu. ft. Heaped Capacity	531 LB		$1,164.00
		735064016	84" Low Profile Extended Bucket (2134 mm), 20.2 cu. ft. Heaped Capacity	607 LB		$1,257.00

Light Material Bucket

		735067016	84" Light Material Bucket (2134 mm), 27.9 cu. ft. Heaped Capacity	532 LB		$1,051.00

Manure & Slurry Bucket

		735070016	84" Manure-Slurry Bucket (2134 mm), 22.5 cu. ft. Heaped Capacity	535 LB		$1,066.00

Heavy Duty Dirt Bucket

		735073016	78" Heavy Duty Dirt Bucket (1981 mm), 15.9 cu. ft. Heaped Capacity	526 LB		$1,442.00
		735074016	84" Heavy Duty Dirt Bucket (2134 mm), 19.4 cu. ft. Heaped Capacity	550 LB		$1,550.00

TR340 & TV380 T4 FINAL
US PRICE LIST

(Ex Works Wichita, KS)

Standard Equipment

ENGINE:
- FPT F5B FL413E water-cooled diesel engine
- 207 CID (3.4L) Turbo
- Tier 4 Final Certified
- Diesel Oxidation Catalyst (DOC) with Selectitve Catalytic Reduction (SCR) Muffler
- High Pressure Common Rail (HPCR) Fuel Injection
- Charged Air Cooler (CAC)
- Horsepower:
  - Gross 90
  - Net 84
  - Peak torque 282 lb-ft (383 Nm)
- 120 amp alternator
- Air cleaner - dual element
- Organic Acid Technology (OAT) Anti-freeze solution to -34° F
- Fuel tank - 25.5 gal. (US)
- 3-stack after cooler/radiator/ oil cool configuration
- Maintenance Free Belt
- Glow Plugs
- Maintenance free 1000 CCA battery with master electrical disconnect

OPERATOR'S PROTECTIVE STRUCTURE:
- Enclosed Cab with Heater and AC
- Control lockout system
- Tilt forward ROPS/FOPS
- Electric parking brake control
- Hand throttle
- Foot throttle
- Switchable (H - ISO) Electro Hydraulic (EH) controls (only on EH models)
- Proportional auxiliary hydraulic control
- Operator's compartment floor cleanout
- Rear window with emergency escape
- Padded seat bar with integral arm rests
- Air Ride Suspension Seat with 2" retractable lap seat belt
- Foot rest
- Dome Light

OPERATOR'S PROTECTIVE STRUCTURE (Continued):
- 12V Power plug socket
- Cup holder
- Tool Pocket
- Top window
- Headliner
- Alarm package (backup and horn)

HYDRAULICS:
- 6 micron oil filtration system
- 3 spool loader control valve
- Auxiliary hydraulics, Proportional thumb wheel activated: loader arm mounted with ISO specification flat face "connect-under-pressure" disconnects including case drain
- Heavy duty hydraulic oil cooler
- Loader arm float position
- Auxiliary hydraulic function lockout override
- Loader arm circuit lockout override
- Self Level
- Ride Control

LOADER (TR340):
- Heavy Duty Hydraulic attachment coupler
- Radial arm geometry
- Loader lift arm support strut
- SAE operating load:
  - 3400 lbs. at 50%
  - 2380 lbs. at 35%
- Tipping load: 6800 lbs.

LOADER (TV380):
- Heavy Duty Hydraulic attachment coupler
- Vertical Lift Arm geometry
- In-cab Loader Lock
- SAE operating load:
  - 3800 lbs. at 50%
  - 2660 lbs. at 35%
- Tipping load: 7600 lbs.

TR340 & TV380 T4 FINAL
US PRICE LIST

(Ex Works Wichita, KS)

Standard Equipment

INSTRUMENTATION:
- Advanced Instrument Cluster with
  - Hour meter
  - Tachometer
  - Fuel gauge
  - Diesel Exhaust Fluid gauge
  - Engine coolant temperature gauge
  - Diagnostic features
  - Security lock-out
- Warning lights with alarms:
  - Critical system stop
  - Engine system
  - Hydraulic system
  - Electrical and diagnostic system
- Warning alarms:
  - Battery voltage (plus display)
  - Diesel Exhaust Fluid (DEF)
  - Engine oil service
- Indicator Light:
  - Engine preheat, Parking brake, Seat bar reminder

TRACK SYSTEM:
- Electro Hydraulic Controlled Hydrostatic 2-speed planetary final drive
- Positive drive imbedded steel rubber track belt
- Spring applied hydraulic release (SAHR) disc parking brake
- Dynamic braking

UNDERCARRIAGE:
- Undercarriage hose covers
- Rigid track frame mounting
- Permanently sealed (duo cone face seal) & lubricated idlers and rollers
- Triple flange lower rollers
- Single flange front and rear idlers
- Hydraulic track adjustment
- Track recoil spring
- Tapered track frame cover

OTHER STANDARD FEATURES:
- Lights - 2 front, 2 side, 2 rear flood (halogen)
- Heavy Duty Front Lights
- Pre-wired for rotating beacon
- Service access hood, lockable
- Single point daily service
- Tail lights
- Option Harness
- Remote oil drain
- Remote oil and fuel filters
- Debris Ingression Prevention Sealing
- Block Heater
- Heavy Duty Rear Door

TR340 & TV380 T4 FINAL
US PRICE LIST

(Ex Works Wichita, KS)

Models

COMMERCIAL MODEL	Weight	Factory Data	List Price
TR340 T4 FINAL	8,880 LB		$87,918.00
TV380 T4 FINAL	10,207 LB		$93,121.00

TR340 & TV380 T4 FINAL
US PRICE LIST

(Ex Works Wichita, KS)

Factory Supplied Options

Order Code	Description	Weight	Factory Data	List Price

CONTROLS AND TRANSMISSION

SD_01100 CONTROLS LEVEL

		761029	2 Speed Mechanical Controls **H-Pattern**			($2,245.00)
		761031	2 Speed E-H Controls **Electro-Hydraulic Switchable (ISO-H Pattern) Controls with Two Speed**			No Charge

ROPS/CAB

SD_05009 CAB

		761043	Open Cab (No Heat or HVAC) **with top window and keyed start**			($5,700.00)
		761046	Enclosed Cab with Heater **Includes side windows, front glass door with wiper, shoulder belt, radio with speakers and keyless start**			($1,500.00)
		761045	Enclosed Cab with Heater & AC **Includes side windows, front glass door with wiper, shoulder belt, radio with speakers and keyless start**			No Charge
		761184	Enclosed Cab w/Heat -Demo Door **Includes side windows, 1/2" polycarbonate front glass door with wiper, shoulder belt, radio with speakers and keyless start**			$314.00
		761183	Enclosed Cab w/HVAC -Demo Door **Includes side windows, 1/2" polycarbonate front glass door with wiper, shoulder belt, radio with speakers and keyless start**			$1,908.00

SD_05016 OPEN CAB TRIM

		X05016X	No Open Cab Interior Trim Pkg			No Charge
		761186	Open Cab Interior Trim Package **For use with Open Cab. Covers interior sides and rear.**			$330.00

SD_05185 CAB SEAT

		761052	Suspension Seat (Vinyl)			($624.00)
		761062	Air Ride Suspension Seat **(Fabric) with temperature control** **(may not be ordered with Open Cab option 761043)**			No Charge

TR340 & TV380 T4 FINAL
US PRICE LIST

(Ex Works Wichita, KS)

SD_K6480 HEAVY DUTY FRONT LIGHTS

		XK6480X	No Heavy Duty Front Lights			($100.00)
		761201	Heavy Duty Front Lights			No Charge

COUPLER

SD_K5101 COUPLERS

		726003	Manual Coupler			($1,100.00)
		761206	Heavy Duty Hydraulic Coupler			No Charge

BLOCK HEATER

SD_02086 BLOCK HEATER

		X02086X	No Block Heater			($125.00)
		761048	Block Heater (120V)			No Charge

OPERATOR MANUALS

SD_32035 LANGUAGE OPTIONS

		761085	English USA			No Charge
		761088	French Canadian			No Charge
		761097	Spanish Latin American			No Charge

OPTIONAL PACKAGES

SD_01201 OPTION PACKAGES

		761032	Standard Equipment Only			($950.00)
		761034	Front Electric/Multi-Function **Contains Front Electric (Multi-function) for Standard Auxiliaries**			($587.00)
		761033	Performance Package **Contains ON/OFF One-way Self Leveling and Ride Control**			No Charge
		761035	Performance w/Front Electric **Contains ON/OFF One-way Self Leveling, Ride Control, and Front Electric**			$669.00
		761036	High Flow Package **Contains High Flow Hydraulics with Front Electric**			$1,421.00
		761037	High Flow Plus Package **Contains Front Electric, High Flow Hydraulics, ON/OFF One-way Self Leveling and Ride Control**			$2,678.00

TR340 & TV380 T4 FINAL
US PRICE LIST

(Ex Works Wichita, KS)

		761039	Enhanced High Flow Package **Only available with units equipped with EH Controls** **Contains 40100 PSI High Flow Hydraulics, second auxiliaries, front electric, high flow hydraulics, ON/OFF One-way self leveling and ride control**			$6,181.00

TRACK BELT OPTIONS

SD_10015 TRACK OPTIONS

		8500147	450 mm (17.7 inch) **78" OW**			No Charge

SD_39100 HEAVY DUTY TRACK COVERS

		X39100X	No Undercarriage Hose Covers			($100.00)
		761204	Undercarriage Hose Covers			No Charge

FRONT ATTACHMENTS

BUCKETS

SD_K5231 BUCKETS

		XK5231X	No Bucket			No Charge
		Dirt & Foundry Bucket				
		761126	78" Dirt & Foundry Bucket **1981 mm, 18.4 cu. ft. Heaped Capacity**			$1,112.00
		Heavy Duty Dirt Bucket				
		761143	78" Heavy Duty Dirt Bucket **1981 mm, 15.9 cu. ft. Heaped Capacity**			$1,442.00
		761144	84" Heavy Duty Dirt Bucket **2134 mm, 19.4 cu. ft. Heaped Capacity**			$1,550.00
		Light Material Bucket				
		761137	84" Light Material Bucket **2134 mm, 27.9 cu. ft. Heaped Capacity**			$1,051.00
		Low Profile Extended Bucket				
		761133	78" Low Profile Extended **1981 mm, 18.6 cu. ft. Heaped Capacity**			$1,164.00
		761134	84" Low Profile Extended **2134 mm, 20.2 cu. ft. Heaped Capacity**			$1,257.00
		Manure & Slurry Bucket				
		761140	84" Manure-Slurry Bucket **2134 mm, 22.5 cu. ft. Heaped Capacity**			$1,066.00

SPILL GUARDS

SD_K5400 SPILL GUARDS

		XK5400X	No Spill Guard			No Charge

TR340 & TV380 T4 FINAL
US PRICE LIST

(Ex Works Wichita, KS)

		761178	78" Spill Guard **For use with Heavy Duty Buckets only**			$237.00
		761179	84" Spill Guard **For use with Heavy Duty Buckets only**			$252.00

BOLT ON CUTTING EDGES

SD_K6399 BOLT ON CUTTING EDGE

		XK6399X	No Bolt on Cutting Edge			No Charge
		761148	78" Bolt on Cutting Edge			$278.00
		761149	84" Bolt on Cutting Edge			$299.00

MOVE TO BIC

SD_K6440 OFF-SITE SERVICE

		XK6440X	No Offsite Service Arrangement			No Charge
		761175	Offsite Service Arrangement			No Charge

SPECIAL PAINT

SD_50103 SPECIAL PAINT

		X50103X	No Special Paint			No Charge
		726029	Special Paint **The price listed is for a color change only from the standard factory color: CNH #86609760 (MS42-Tan). All Special Color formulations will be applied using approved factory processes and materials. Metallic or other special formulations and/or materials are not available. A color chip must be provided to CNH for non CNH colors. A minimum lead time of 8 business weeks will be required prior to production. Unless specified, regular production decals will be applied. Requests can be made that decals not be applied. However, SAFETY decals MUST BE APPLIED in all cases. The following components remain CNH grey: lift & bucket cylinders, front coupler and attachments, ROPS, side screens, rear hood, upper chassis and control links, undercarriages and brackets.**			$3,213.00

TELEMATICS

SD_K6450 TELEMATICS

		XK6450X	No Telematics			No Charge
		761187	CASE SiteWatch Telematics			$874.00

TR340 & TV380 T4 FINAL
US PRICE LIST

(Ex Works Wichita, KS)

Factory Supplied Attachments

Order Code			Description	Weight	Factory Data	List Price
Basic Attachments						
		735030006	Demo Rear Door Insert	32 LB		$330.00
		735006006	Beacon Kit	1 LB		$165.00
		735007006	4-Corner LED Strobe Kit Must order connector. Reference dependency matrix.	24 LB		$536.00
		735159026	Heater Complete For use with Tier 3 Must order applicable harness. Reference dependency matrix.	137 LB		$1,472.00
		735159046	Heater Complete For use with TR310 Tier 4 Final, TR320 Tier 4 Interim and TV380 Tier 4 Interim Must order applicable harness. Reference dependency matrix.	141 LB		$1,472.00
		735159066	Heater Complete For use with TR340 Tier 4 Final and TV380 Tier 4 Final Must order applicable harness. Reference dependency matrix.	118 LB		$1,472.00
		735158056	HVAC Complete For use with TR320 Tier 3 Must order applicable harness. Reference dependency matrix.	379 LB		$3,162.00
		735158066	HVAC Complete For use with TV380 Tier 3 Must order applicable harness. Reference dependency matrix.	383 LB		$3,162.00
		735158146	HVAC Complete For use with TR320 Tier 4 Interim Must order applicable harness. Reference dependency matrix.	384 LB		$3,162.00
		735158156	HVAC Complete For use with TV380 Tier 4 Interim Must order applicable harness. Reference dependency matrix.	381 LB		$3,162.00
		735158196	HVAC Complete For use wtih TR340 Tier 4 Final Must order applicable harness. Reference dependency matrix.	394 LB		$3,162.00
		735158206	HVAC Complete For use with TV380 Tier 4 Final Must order applicable harness. Reference dependency matrix.	396 LB		$3,162.00
		735146006	Three Point Seat Belt	4 LB		$250.00
		735011006	Glass Front Door Kit Center mounted wiper Requires three point seat belt. Must order applicable harness. Reference dependency matrix.	182 LB		$1,653.00
		735012006	Demo Front Door Kit Center mounted wiper Requires three point seat belt. Must order applicable harness. Reference dependency matrix.	182 LB		$2,905.00
		735013006	Cab Side Windows Kit	139 LB		$927.00
		735016006	Radio Kit Must order applicable harness. Reference dependency matrix.	16 LB		$443.00
		735149006	Open Cab Interior Trim Kit For use with TR340 Tier 4 Final and TV380 Tier 4 Final	42 LB		$399.00
		735150006	Open Cab Interior Trim Kit For use with Open Cab. Covers interior sides and rear.	20 LB		$399.00

TR340 & TV380 T4 FINAL
US PRICE LIST

(Ex Works Wichita, KS)

		735020016	Road Light Kit For use with TR320 Tier 3 and Tier 4 Interim	111 LB		$649.00
		735020026	Road Light Kit For use with TV380 Tier 3 and Tier 4 Interim	111 LB		$649.00
		735124006	Side Lamp Kit	6 LB		$272.00
		735021006	Multi-Function Front Electrical Mech Kit For use with TR310 Tier 4 Final and TR320 Tier 3 and Tier 4 Interim Must order applicable handle. Reference dependency matrix.	11 LB		$294.00
		735021016	Multi-Function Front Electrical Mech Kit For use with TV380 Tier 3 and Tier 4 Interim Must order applicable handle. Reference dependency matrix.	11 LB		$294.00
		735021036	Multi-Function Front Electrical Mech Kit For use with TR340 Tier 4 Final Must order applicable handle. Reference dependency matrix.	62 LB		$294.00
		735021046	Multi-Function Front Electrical Mech Kit For use with TV380 Tier 4 Final Must order applicable handle. Reference dependency matrix.	62 LB		$294.00
		735125006	Multi-Function Front Electrical E-H Kit For use with TR310 Tier 4 Final, TR320 Tier 3 and Tier 4 Interim Must order applicable handle. Reference dependency matrix.	11 LB		$294.00
		735125016	Multi-Function Front Electrical E-H Kit For use with TV380 Tier 3 and Tier 4 Interim Must order applicable handle. Reference dependency matrix.	11 LB		$294.00
		735125036	Multi-Function Front Electrical E-H Kit For use with TR340 Tier 4 Final Must order applicable handle. Reference dependency matrix.	97 LB		$294.00
		735125046	Multi-Function Front Electrical E-H Kit For use with TV380 Tier 4 Final Must order applicable handle. Reference dependency matrix.	62 LB		$294.00
		735022016	One Way Self Level Kit For use with TV380 Tier 3, Tier 4 Interim and Final	14 LB		$520.00
		735022046	One Way Self Level Kit For use with TR310 Tier 4 Final, TR320 Tier 3, TR320 Tier 4 Interim and TR340 Tier 4 Final	15 LB		$520.00
		735023006	Ride Control Kit Must order applicable handle. Reference dependency martix.	33 LB		$515.00
		735024006	Hydraulic Coupler Kit For use with TR310 Tier 4 Final, TR320 Tier 3 and Tier 4 Interim Must order applicable harness. Reference dependency matrix.	160 LB		$1,324.00
		735024016	Hydraulic Coupler Kit For use with TV380 Tier 3 and Tier 4 Interim Must order applicable harness. Reference dependency matrix.	159 LB		$1,324.00
		735024036	Hydraulic Coupler Kit For use with TR320 Tier 3 and Tier 4 Interim and TR340 Tier 4 Final Must order applicable harness. Reference dependency matrix.	151 LB		$1,441.00
		735024046	Hydraulic Coupler Kit For use with TV380 Tier 3 and Tier 4 Interim and Final Must order applicable harness. Reference dependency matrix.	152 LB		$1,441.00
		735025026	High Flow Auxiliary Kit For use with TV380 Tier 3 Must order applicable harness. Reference dependency matrix.	193 LB		$2,699.00

TR340 & TV380 T4 FINAL
US PRICE LIST

(Ex Works Wichita, KS)

		735025036	High Flow Auxiliary Kit For use with TR320 Tier 3 Must order applicable harness. Reference dependency matrix.	190 LB		$2,699.00
		735025056	High Flow Auxiliary Kit For use with TR320 Tier 4 Interim Must order applicable harness. Reference dependency matrix.	192 LB		$2,699.00
		735025066	High Flow Auxiliary Kit For use with TV380 Tier 4 Interim Must order applicable harness. Reference dependency matrix.	191 LB		$2,699.00
		735025116	High Flow Auxiliary Kit For use with TR340 Tier 4 Final Must order applicable harness. Reference dependency matrix.	97 LB		$2,699.00
		735025126	High Flow Auxiliary Kit For use with TV380 Tier 4 Final Must order applicable harness. Reference dependency matrix.	97 LB		$2,699.00
		735027026	Second Hydraulic Front Auxiliary Kit For use with TV380 Tier 3 and Tier 4 Interim Must order applicable handle. Reference dependency matrix.	86 LB		$1,103.00
		735027036	Second Hydraulic Front Auxiliary Kit For use with TR320 Tier 3 and Tier 4 Interim Must order applicable handle. Reference dependency matrix.	84 LB		$1,103.00
		735036026	4-Point Lift Hook Kit For use with TR320 Tier 3 and Tier 4 Interim and TV380 Tier 3 and Tier 4 Interim	10 LB		$238.00
		735036036	4-Point Lift Hook Kit For use with TR340 Tier 4 Final and TV380 Tier 4 Final	20 LB		$238.00
		735037006	Single Point Lift Hook Kit For use with TR320 Tier 3, Tier 4 Interim and TR340 Tier 4 Final	289 LB		$1,102.00
		735037046	Single Point Lift Hook Kit For use with TV380 Tier 3, Tier 4 Interim and Tier 4 Final	269 LB		$1,102.00
		735038006	FOPS Level 2 Modification Kit	61 LB		$368.00
		735039036	Extra Counterweight Kit	659 LB		$1,251.00
		735040036	Aspirator Kit For use with TV380 Tier 3	13 LB		$340.00
		735040056	Aspirator Kit For use with TR320 Tier 3	9 LB		$340.00
		735040066	Aspirator Kit For use with TV380 Tier 4 Interim	15 LB		$340.00
		735040076	Aspirator Kit For use with TR320 Tier 4 Interim	16 LB		$340.00
		735042006	Interior Mirror Kit	4 LB		$62.00
		735045006	Foot Control Conversion Kit For use with Tier 3	54 LB		$659.00
		735045046	Foot Control Conversion Kit	52 LB		$659.00
		735046026	Hand Control Conversion Kit For use with Tier 3	78 LB		$883.00
		735046056	Hand Control Conversion Kit For use with TR320 Tier 4 Interim and TV380 Tier 4 Interim	77 LB		$883.00
		735046066	Hand Control Conversion Kit	76 LB		$883.00
		735047006	120V Block Heater Kit	6 LB		$221.00
		735048006	220V Block Heater Kit	6 LB		$221.00
		735142006	Cylinder Guard Kit	21 LB		$792.00

TR340 & TV380 T4 FINAL
US PRICE LIST

(Ex Works Wichita, KS)

		735151046	Debris Seal Kit For use with TR320 Tier 3 and Tier 4 Interim units built prior to July 2012 Reduces debris ingression to engine compartment and chassis	23 LB		$253.00
		735151066	Debris Seal Kit For use with TV380 Tier 3 and Tier 4 Interim units built prior to July 2012 Reduces debris ingression to engine compartment and chassis	17 LB		$283.00
		735152036	New Hood with Debris Seal Kit Contains new hood and additional sealing items Reduces debris ingression to engine compartment and chassis For use with TR320 Tier 3 models built prior to July 2012	124 LB		$749.00
		735152056	New Hood with Debris Seal Kit Contains new hood and additional sealing items Reduces debris ingression to engine compartment and chassis For use with TV380 Tier 3 models built prior to July 2012	109 LB		$901.00
		735161006	Heavy Duty Front Lights - Radial Model For use with TR310 Tier 4 Final, TR320 Tier 3 and Tier 4 Interim	26 LB		$429.00
		735161016	Heavy Duty Front Lights - Vertical Model For use with TV380 Tier 3 and Tier 4 Interim	26 LB		$429.00
		735163006	Heavy Duty Rear Door For use with TR320 Tier 3 and Tier 4 Interim and TV380 Tier 3 and Tier 4 Interim	140 LB		$769.00

Handles - E-H Models

		735126006	LH EH Handle Kit (NO 2nd Aux) Adds Front Electric.	2 LB		$191.00
		735127006	RH EH Handle Kit Adds Front Electric.	2 LB		$191.00
		735132006	LH EH Handle Kit (WITH 2nd Aux) Adds Second Auxiliary with Front Electric.	2 LB		$191.00

Handles - Mechanical Models

		735134006	LH Mechanical Handle Kit (NO 2nd Aux) Adds Front Electric.	2 LB		$191.00
		735135006	LH Mechanical Handle Kit (WITH 2nd Aux) Adds Second Auxiliary with Front Electric.	2 LB		$191.00
		735136006	RH Mechanical Handle Kit Adds Front Electric.	2 LB		$191.00

Pallet Fork

		735075006	Pallet Fork Frame w/48" Tines	540 LB		$1,355.00

Dirt & Foundry Bucket

		735056016	78" Dirt & Foundry Bucket (1981 mm), 18.4 cu. ft. Heaped Capacity	429 LB		$1,112.00

Low Profile Extended Bucket

		735063016	78" Low Profile Extended Bucket (1981 mm), 18.6 cu. ft. Heaped Capacity	531 LB		$1,164.00
		735064016	84" Low Profile Extended Bucket (2134 mm), 20.2 cu. ft. Heaped Capacity	607 LB		$1,257.00

TR340 & TV380 T4 FINAL
US PRICE LIST

(Ex Works Wichita, KS)

Light Material Bucket

		735067016	84" Light Material Bucket (2134 mm), 27.9 cu. ft. Heaped Capacity	532 LB		$1,051.00

Manure & Slurry Bucket

		735070016	84" Manure-Slurry Bucket (2134 mm), 22.5 cu. ft. Heaped Capacity	535 LB		$1,066.00

Heavy Duty Dirt Bucket

		735073016	78" Heavy Duty Dirt Bucket (1981 mm), 15.9 cu. ft. Heaped Capacity	526 LB		$1,442.00
		735074016	84" Heavy Duty Dirt Bucket (2134 mm), 19.4 cu. ft. Heaped Capacity	550 LB		$1,550.00

CONSTRUCTION EQUIPMENT

U.S. PRICE LIST

SKID STEER LOADER

PL-200 SL SAP REVISION 15b

REVISED JANUARY 1, 2015

Below is a list of Family(s) and Model(s) that are included in this price list.

Skid Steers
- SR130 TIER 4 FINAL
- SR160 TIER 4 FINAL
- SR175 TIER 4 FINAL
- SV185 TIER 4 FINAL
- SR210 TIER 4 FINAL
- SR220 TIER 4 INTERIM
- SR240 TIER 4 FINAL
- SR250 TIER 4 INTERIM
- SR270 TIER 4 FINAL
- SV250 TIER 4 INTERIM
- SV280 TIER 4 FINAL
- SV300 TIER 4 INTERIM
- SV300 TIER 4 FINAL

Copyright 2015 By

CNH Industrial America LLC

SKID STEER LOADER
TABLE OF CONTENTS

SKID STEER LOADER

SERIAL NUMBER BRAEK REFERENCE GUIDE…… SL- 7

SR130 & SR160 TIER 4 FINAL SKID STEER LOADER

Standard Features …….. SL- 9

Price List …… SL- 11

Attachment Dependency Matrix…….... SL- 17

Factory Supplied Attachments…… SL- 19

SR175 & SV185 TIER 4 FINAL SKID STEER LOADER

Standard Features …… SL- 23

Price List …… SL- 25

Attachment Dependency Matrix…….... SL- 31

Tire Dependency Matrix…….... SL- 35

Factory Supplied Attachments…… SL- 37

SR210 TIER 4 FINAL SKID STEER LOADER

Standard Features …….. SL- 43

Price List …… SL- 45

Attachment Dependency Matrix…….... SL- 51

Tire Dependency Matrix…….... SL- 55

Factory Supplied Attachments…… SL- 57

SR220 TIER 4 INTERIM SKID STEER LOADER

Standard Features …….. SL- 63

Price List …… SL- 65

Attachment Dependency Matrix…….... SL- 71

Tire Dependency Matrix…….... SL- 75

Factory Supplied Attachments…… SL- 77

SR240 TIER 4 FINAL SKID STEER LOADER

Standard Features …….. SL- 83

Price List …… SL- 85

Attachment Dependency Matrix…….... SL- 91

Tire Dependency Matrix…….... SL- 95

Factory Supplied Attachments…… SL- 97

SR250 TIER 4 INTERIM SKID STEER LOADER

Standard Features …….. SL- 103

Price List …… SL- 105

Attachment Dependency Matrix…….... SL- 111

Tire Dependency Matrix…….... SL- 115

Factory Supplied Attachments…… SL- 117

SR270 TIER 4 FINAL SKID STEER LOADER

Standard Features …….. SL- 123

Price List …… SL- 125

Attachment Dependency Matrix…….... SL- 131

Tire Dependency Matrix…….... SL- 137

Factory Supplied Attachments…… SL- 139

SKID STEER LOADER
TABLE OF CONTENTS

SKID STEER LOADER

SV250 TIER 4 INTERIM SKID STEER LOADER

Standard Features …….. SL- 145
Price List …… SL- 147
Attachment Dependency Matrix…….... SL- 153
Tire Dependency Matrix……... SL- 157
Factory Supplied Attachments…… SL- 159

SV280 TIER 4 FINAL SKID STEER LOADER

Standard Features …….. SL- 165
Price List …… SL- 167
Attachment Dependency Matrix…….... SL- 173
Tire Dependency Matrix……... SL- 177
Factory Supplied Attachments…… SL- 179

SV300 TIER 4 INTERIM SKID STEER LOADER

Standard Features …….. SL- 185
Price List …… SL- 187
Attachment Dependency Matrix…….... SL- 193
Tire Dependency Matrix……... SL- 197
Factory Supplied Attachments…… SL- 199

SV300 TIER 4 FINAL SKID STEER LOADER

Standard Features …….. SL- 205
Price List …… SL- 207
Attachment Dependency Matrix…….... SL- 213
Tire Dependency Matrix……... SL- 217
Factory Supplied Attachments…… SL- 219

SR130 & SR160 T4 FINAL SKID STEER LOADER
US PRICE LIST

(Ex Works Wichita, KS)

Standard Equipment

ENGINE:
- For SR130
  - ISM N844L-F water cooled diesel engine
  - 134 CID (2.2 L) Naturally Aspirated
  - Tier 4 Final Certified
  - Horsepower:
    - Gross 48.8
    - Net 45.8
    - Peak torque 105.5 lb•ft (143 N•m)
- For SR160
  - ISM N844LT-F water cooled diesel engine
  - 134 CID (2.2 L) Turbo
  - Tier 4 Final Certified
  - Horsepower:
    - Gross 60
    - Net 57
    - Peak torque 139 lb•ft (188 N•m)
- 120 amp alternator
- Air cleaner - dual element
- Anti-freeze solution to -34° F
- Fuel tank - 16 gal. (U.S.)
- Spark Arresting Diesel Particulate Filter (DPF) Muffler
- Single Plane, Top and Bottom Oil Cooler/Radiator Configuration
- Glow Plugs
- Maintenance free 925 CCA battery with master disconnect

OPERATOR'S PROTECTIVE STRUCTURE:
- ROPS/FOPS Level 1 canopy with side screens
- Control lockout system
- Tilt forward ROPS/FOPS
- Electric parking brake control
- Electronic Hand throttle
- Electronic Foot throttle
- Mechanical H-Pattern hand controls
- Operator's compartment floor cleanout
- Rear window with emergency escape
- Padded seat bar with integral arm rests

OPERATOR'S PROTECTIVE STRUCTURE (Continued):
- Suspension Seat, vinyl with 2" retractable lap seat belt
- Foot rest
- Dome Light
- 12V Power plug socket
- Cup holder
- Top window
- Headliner
- Alarm package (backup and horn)

OTHER STANDARD FEATURES:
- Lights - 2 front, 2 side, 2 rear flood (halogen)
- Heavy Duty Front Lights
- Pre-wired for rotating beacon
- Service access hood, lockable
- Single point daily service
- Tail lights
- Remote oil drain
- Remote Oil and Fuel Filters
- Manual Quick Coupler
- Block Heater
- Debris Ingression Sealing

INSTRUMENTATION:
- Advanced Instrument Cluster with Hour meter, fuel guage, engine and oil temperature gauge, diagnostic features and security lock-out
- Warning lights with alarms:
  - Engine coolant temperature
  - Systems Critical Stop
  - Electronic System Indicator
  - Engine System Indicator
  - Hydraulic System Indicator
  - Hydraulic oil temperature
- Warning alarms:
  - Battery voltage (plus display)
  - Diesel Particulate Filter (DPF)
- Indicator Light:
  - Engine preheat
  - Parking brake
  - Seat bar reminder

SR130 & SR160 T4 FINAL SKID STEER LOADER
US PRICE LIST

(Ex Works Wichita, KS)

Standard Equipment

DRIVE:
- Manual controlled hydrostatic four wheel drive
- Spring applied hydraulic release (SAHR) disc parking brake
- Dynamic braking
- ASA #80 drive chain

HYDRAULICS:
- 6 micron oil filtration system
- 3 spool loader control valve
- Auxiliary hydraulics, Proportional thumb wheel activated: loader arm mounted with ISO specification flat face "connect-under-pressure" disconnects
  - Including case drain
- Standard duty hydraulic oil cooler
- Loader arm float position
- Auxiliary hydraulic function lockout override
- Loader arm circuit lockout override

LOADER:
- Mechanical attachment coupler
- Radial arm geometry
- Loader lift arm support strut
- For SR130:
  - SAE operating load: 1300 lbs.
  - Tipping load: 2600 lbs.
- For SR160:
  - SAE operating load: 1600 lbs.
  - Tipping load: 3200 lbs.

TIRES:
- 10 X 16.5 Heavy Duty - 59 inch Over-the-Tire Width (OTW) Galaxy XD2002

SR130 & SR160 T4 FINAL SKID STEER LOADER
US PRICE LIST

(Ex Works Wichita, KS)

Models

COMMERCIAL MODEL	Weight	Factory Data	List Price
SR130-T4 FINAL	8,900 LB		$36,794.00
SR160-T4 FINAL	8,900 LB		$40,635.00

SR130 & SR160 T4 FINAL SKID STEER LOADER
US PRICE LIST

(Ex Works Wichita, KS)

Factory Supplied Options

Order Code	Description	Weight	Factory Data	List Price

CONTROLS AND TRANSMISSION

SD_01401 DRIVE CONTROL TYPE

		761040	Hand Controls (H-Pattern)			No Charge
		761041	Foot and Hand Controls			No Charge
		761042	E-H Controls			No Charge

SD_01100 CONTROLS LEVEL

		761028	1 Speed Mechanical Controls			No Charge
		761030	1 Speed E-H Controls **Electro-Hydraulic Switchable (ISO-H Pattern) Controls with Single Speed**			$2,245.00

ROPS/CAB

SD_05009 CAB

		761043	Open Cab (No Heat or HVAC) **with top window and keyed start**			No Charge
		761046	Enclosed Cab with Heater **Includes side windows, front glass door with wiper, shoulder belt, radio with speakers and keyless start**			$4,474.00
		761184	Enclosed Cab w/Heat -Demo Door **Includes side windows, 1/2" polycarbonate front door with wiper, shoulder belt, radio with speakers and keyless start**			$6,383.00

SD_05016 OPEN CAB TRIM

		X05016X	No Open Cab Interior Trim Pkg			No Charge
		761186	Open Cab Interior Trim Package **For use with Open Cab. Covers interior sides and rear.**			$330.00

SD_05185 CAB SEAT

		761050	Non Suspension Seat			($350.00)
		761052	Suspension Seat (Vinyl)			No Charge
		761062	Air Ride Suspension Seat **(Fabric) with temperature control (may not be ordered with Open Cab option 761043)**			$624.00

SD_K6480 HEAVY DUTY FRONT LIGHTS

		XK6480X	No Heavy Duty Front Lights			($100.00)

SR130 & SR160 T4 FINAL SKID STEER LOADER
US PRICE LIST

(Ex Works Wichita, KS)

		761201	Heavy Duty Front Lights			No Charge

COUPLER

SD_K5101 COUPLERS

		726003	Manual Coupler			No Charge
		726004	Hydraulic Coupler			$1,126.00

BLOCK HEATER

SD_02086 BLOCK HEATER

		X02086X	No Block Heater			($125.00)
		761048	Block Heater (120V)			No Charge

OPERATOR MANUALS

SD_32035 LANGUAGE OPTIONS

		761085	English USA			No Charge
		761088	French Canadian			No Charge
		761097	Spanish Latin American			No Charge

OPTIONAL PACKAGES

SD_01201 OPTION PACKAGES

		761032	Standard Equipment Only			No Charge
		761033	Performance Package **Contains ON/OFF One-Way Self Leveling and Ride Control**			$1,257.00

TIRES

SD_16068 TIRE OPTIONS

		8501207	10x16.5 Heavy Duty (59 OTW) **8PR Stamped Center - Galaxy XD2002**			No Charge
		8501307	10x16.5 Premium (59 OTW) **8PR Stamped Center - Galaxy Beefy Baby II**			$278.00
		8501407	10x16.5 Premium-Liner (59 OTW) **8PR Stamped Center - Galaxy Beefy Baby II**			$453.00
		8501507	27x10.5-15 Premium (64 OTW) **(for over-the-wheel tracks only)** **8PR Stamped Center - Galaxy Beefy Baby II**			$268.00

SR130 & SR160 T4 FINAL SKID STEER LOADER
US PRICE LIST

(Ex Works Wichita, KS)

		8502107	10x16.5 Non-Pneumatic (64 OTW) **10PR Welded Plate Center - Solid Flex**			$3,523.00

FRONT ATTACHMENTS

BUCKETS

SD_K5231 BUCKETS

		XK5231X	No Bucket			No Charge
		Dirt & Foundry Bucket				
		761123	60" Dirt & Foundry Bucket **(1524 mm), 11.5 cu. ft. Heaped Capacity**			$855.00
		761124	66" Dirt & Foundry Bucket **(1676 mm), 15.2 cu. ft. Heaped Capacity**			$942.00
		761125	72" Dirt & Foundry Bucket **(1829 mm), 16.7 cu. ft. Heaped Capacity**			$1,071.00
		Heavy Duty Dirt Bucket				
		761141	66" Heavy Duty Dirt Bucket **(1676 mm), 13.3 cu. ft. Heaped Capacity**			$1,215.00
		761142	72" Heavy Duty Dirt Bucket **(1829 mm), 14.6 cu. ft. Heaped Capacity**			$1,329.00
		Light Material Bucket				
		761135	60" Light Material Bucket **(1524 mm), 19.7 cu. ft. Heaped Capacity**			$752.00
		761136	72" Light Material Bucket **(1829 mm), 23.7 cu. ft. Heaped Capacity**			$901.00
		Low Profile Buckets				
		761127	60" Low Profile Bucket **(1524 mm), 11.5 cu. ft. Heaped Capacity**			$803.00
		761128	66" Low Profile Bucket **(1676 mm), 13.2 cu. ft. Heaped Capacity**			$886.00
		761129	72" Low Profile Bucket **(1829 mm), 14.5 cu. ft. Heaped Capacity**			$968.00
		Low Profile Extended Bucket				
		761130	60" Low Profile Extended **(1524 mm), 14.3 cu. ft. Heaped Capacity**			$896.00
		761131	66" Low Profile Extended **(1676 mm), 15.5 cu. ft. Heaped Capacity**			$989.00
		761132	72" Low Profile Extended **(1829 mm), 17.1 cu. ft. Heaped Capacity**			$1,076.00
		Manure & Slurry Bucket				
		761138	60" Manure-Slurry Bucket **(1524 mm), 16.7 cu. ft. Heaped Capacity**			$762.00
		761139	72" Manure-Slurry Bucket **(1829 mm), 19.1 cu. ft. Heaped Capacity**			$917.00

SR130 & SR160 T4 FINAL SKID STEER LOADER
US PRICE LIST

(Ex Works Wichita, KS)

SPILL GUARDS

SD_K5400 SPILL GUARDS

		XK5400X	No Spill Guard			No Charge
		761176	66" Spill Guard **For use with Heavy Duty Buckets only**			$196.00
		761177	72" Spill Guard **For use with Heavy Duty Buckets only**			$216.00

BOLT ON CUTTING EDGES

SD_K6399 BOLT ON CUTTING EDGE

		XK6399X	No Bolt on Cutting Edge			No Charge
		761145	60" Bolt on Cutting Edge			$211.00
		761146	66" Bolt on Cutting Edge			$232.00
		761147	72" Bolt on Cutting Edge			$258.00

MOVE TO BIC

SD_K6440 OFF-SITE SERVICE

		XK6440X	No Offsite Service Arrangement			No Charge
		761175	Offsite Service Arrangement			No Charge

SPECIAL PAINT

SD_50103 SPECIAL PAINT

		X50103X	No Special Paint			No Charge
		726029	Special Paint **The price listed is for a color change only from the standard factory color: CNH #86609760 (MS42-Tan). All Special Color formulations will be applied using approved factory processes and materials. Metallic or other special formulations and/or materials are not available. A color chip must be provided to CNH for non CNH colors. A minimum lead time of 8 business weeks will be required prior to production. Unless specified, regular production decals will be applied. Requests can be made that decals not be applied. However, SAFETY decals MUST BE APPLIED in all cases. The following components remain CNH grey: lift & bucket cylinders, front coupler and attachments, ROPS, side screens, rear hood, upper chassis and control links.**			$3,213.00

SR130 & SR160 T4 FINAL SKID STEER LOADER
US PRICE LIST

(Ex Works Wichita, KS)

TELEMATICS

SD_K6450 TELEMATICS

		XK6450X	No Telematics			No Charge
		761187	CASE SiteWatch Telematics			$874.00

SR130 & SR160 T4 FINAL SKID STEER LOADER
US PRICE LIST

(Ex Works Wichita, KS)

Factory Supplied Attachments

Order Code			Description	Weight	Factory Data	List Price
Basic Attachments						
		735030006	Demo Rear Door Insert	32 LB		$330.00
		735006006	Beacon Kit	1 LB		$165.00
		735007006	4-Corner LED Strobe Kit Must order connector. Reference dependency matrix.	24 LB		$536.00
		735159006	Heater Complete Must order applicable harness. Reference dependency matrix.	135 LB		$1,472.00
		735146006	Three Point Seat Belt	4 LB		$250.00
		735011006	Glass Front Door Kit Center mounted wiper Requires three point seat belt. Must order applicable harness. Reference dependency matrix.	182 LB		$1,653.00
		735012006	Demo Front Door Kit Center mounted wiper Requires three point seat belt. Must order applicable harness. Reference dependency matrix.	182 LB		$2,905.00
		735013006	Cab Side Windows Kit	139 LB		$927.00
		735016006	Radio Kit Must order applicable harness. Reference dependency matrix.	16 LB		$443.00
		735150006	Open Cab Interior Trim Kit For use with Open Cab. Covers interior sides and rear.	20 LB		$399.00
		735020006	Road Light Kit Must order applicable harness. Reference dependency matrix.	33 LB		$649.00
		735124006	Side Lamp Kit	6 LB		$272.00
		735022006	One Way Self Level Kit	9 LB		$520.00
		735023016	Ride Control Kit Must order applicable handle. Reference dependency matrix.	32 LB		$515.00
		735024026	Hydraulic Coupler Kit	172 LB		$1,324.00
		735037026	Single Point Lift Hook Kit Reference dependency matrix.	284 LB		$1,102.00
		735038006	FOPS Level 2 Modification Kit	61 LB		$368.00
		735039006	Extra Counterweight Kit	231 LB		$443.00
		735040086	Aspirator Kit For use with Tier 4	13 LB		$340.00
		735040006	Aspirator Kit For use with Tier 3	15 LB		$340.00
		735042006	Interior Mirror Kit	4 LB		$62.00
		735045006	Foot Control Conversion Kit Not available for units equipped with Electro Hydraulic (EH) controls. For use with Tier 3	54 LB		$659.00
		735045046	Foot Control Conversion Kit Not available for units equipped with Electro Hydraulic (EH) controls. For use with Tier 4	52 LB		$659.00
		735046006	Hand Control Conversion Kit For use with Tier 3	76 LB		$883.00

SR130 & SR160 T4 FINAL SKID STEER LOADER
US PRICE LIST

(Ex Works Wichita, KS)

		735046036	Hand Control Conversion Kit For use with Tier 4	76 LB		$883.00
		735047016	120V Block Heater Kit	3 LB		$221.00
		735048016	220V Block Heater Kit	3 LB		$221.00
		735151036	Debris Seal Kit Reduces debris ingression to engine compartment and chassis For use with Tier 3	29 LB		$363.00
		735151076	Debris Seal Kit Reduces debris ingression to engine compartment and chassis For use with Tier 4	27 LB		$363.00
		735161006	Heavy Duty Front Lights - Radial Model For use with Radial Models	26 LB		$429.00

Handles - E-H Models

		735126006	LH EH Handle Kit (NO 2nd Aux) Adds Front Electric on all models except SR130 and SR160	2 LB		$191.00
		735127006	RH EH Handle Kit Adds Front Electric on all models except SR130 and SR160	2 LB		$191.00

Handles - Mechanical Models

		735134006	LH Mechanical Handle Kit (NO 2nd Aux) Adds Front Electric.	2 LB		$191.00
		735136006	RH Mechanical Handle Kit Adds Front Electric.	2 LB		$191.00

Pallet Forks

		735075006	Pallet Fork Frame w/48" Tines	540 LB		$1,355.00

Dirt & Foundry Bucket

		735053016	60" Dirt & Foundry Bucket (1524 mm), 11.5 cu. ft. heaped capacity	293 LB		$855.00
		735054016	66" Dirt & Foundry Bucket (1676 mm), 15.2 cu. ft. Heaped Capacity	374 LB		$942.00
		735055016	72" Dirt & Foundry Bucket (1829 mm), 16.7 cu. ft. Heaped Capacity	407 LB		$1,071.00

Low Profile Bucket

		735057016	60" Low Profile Bucket (1524 mm), 11.5 cu. ft Heaped Capacity	367 LB		$803.00
		735058016	66" Low Profile Bucket (1676 mm), 13.2 cu. ft. Heaped Capacity	431 LB		$886.00
		735059016	72" Low Profile Bucket (1829 mm), 14.5 cu. ft. Heaped Capacity	471 LB		$968.00

Low Profile Extended Bucket

		735060016	60" Low Profile Extended Bucket (1524 mm), 14.3 cu. ft. Heaped Capacity	391 LB		$896.00
		735061016	66" Low Profile Extended Bucket (1676 mm), 15.5 cu. ft. Heaped Capacity	460 LB		$989.00
		735062016	72" Low Profile Extended Bucket (1829 mm), 17.1 cu. ft. Heaped Capacity	504 LB		$1,076.00

SR130 & SR160 T4 FINAL SKID STEER LOADER
US PRICE LIST

(Ex Works Wichita, KS)

Light Material Bucket

		735065016	60" Light Material Bucket (1524 mm), 19.7 cu. ft. Heaped Capacity	360 LB		$752.00
		735066016	72" Light Material Bucket (1829 mm), 23.7 cu. ft. Heaped Capacity	466 LB		$901.00

Manure & Slurry Bucket

		735068016	60" Manure-Slurry Bucket (1524 mm), 16.7 cu. ft. Heaped Capacity	360 LB		$762.00
		735069016	72" Manure-Slurry Bucket (1829 mm), 19.1 cu. ft. Heaped Capacity	469 LB		$917.00

Heavy Duty Dirt Bucket

		735071016	66" Heavy Duty Dirt Bucket (1676 mm), 13.3 cu. ft. Heaped Capacity	449 LB		$1,215.00
		735072016	72" Heavy Duty Dirt Bucket (1829 mm), 14.6 cu. ft. Heaped Capacity	501 LB		$1,329.00

Heavy Duty Tire Assembly

		735082006	10x16.5 Heavy Duty (59 OTW) RH Kit Galaxy XD2002 Reference Loader Stop matrix. 1 tire assembly	116 LB		$354.00
		735104006	10x16.5 Heavy Duty (59 OTW) LH Kit Galaxy XD2002 Reference Loader Stop matrix. 1 tire assembly	116 LB		$354.00

Premium Tire Assembly

		735083006	10x16.5 Premium (59 OTW) RH Kit Galaxy Beefy Baby II Reference Loader Stop matrix. 1 tire assembly	127 LB		$425.00
		735105006	10x16.5 Premium (59 OTW) LH Kit Galaxy Beefy Baby II Reference Loader Stop matrix. 1 tire assembly	127 LB		$425.00
		735122006	27x10.5-15 Premium (64 OTW) RH Kit Galaxy Beefy Baby II Reference Loader Stop matrix. 1 tire assembly	158 LB		$331.00
		735123006	27x10.5-15 Premium (64 OTW) LH Kit Galaxy Beefy Baby II Reference Loader Stop matrix. 1 tire assembly	158 LB		$331.00

Premium-Liner Tire Assembly

		735084006	10x16.5 Premium-Liner (59 OTW) RH Kit Galaxy Beefy Baby II Reference Loader Stop matrix. 1 tire assembly	90 LB		$470.00
		735106006	10x16.5 Premium-Liner (59 OTW) LH Kit Galaxy Beefy Baby II Reference Loader Stop matrix. 1 tire assembly	90 LB		$470.00

Non-Pneumatic Tire Assembly

		735091006	10x16.5 Non-Pneumatic (64 OTW) RH Kit Solid Flex Reference Loader Stop matrix. 1 tire assembly	251 LB		$1,098.00

SR130 & SR160 T4 FINAL SKID STEER LOADER
US PRICE LIST

(Ex Works Wichita, KS)

		735112006	10x16.5 Non-Pneumatic (64 OTW) LH Kit Solid Flex Reference Loader Stop matrix. 1 tire assembly	251 LB		$1,098.00

SR175 & SV185 T4 FINAL SKID STEER LOADER
US PRICE LIST

(Ex Works Wichita, KS)

Standard Equipment

ENGINE:
- For SR175
  - ISM N844LTA-DI-F-50 water cooled diesel engine
  - 134 CID (2.2 L) Turbo Aftercooled
  - Tier 4 Final Certified
  - High Pressure Common Rail (HPCR) Fuel Injection
  - Horsepower:
    - Gross 67
    - Net 64
    - Peak torque 153 lb•ft (208 N•m)
- For SV185
  - ISM N844LTA-DI-F-45 water cooled diesel engine
  - 134 CID (2.2 L) Turbo Aftercooled
  - Tier 4 Final Certified
  - High Pressure Common Rail (HPCR) Fuel Injection
  - Horsepower:
    - Gross 60
    - Net 57
    - Peak torque 135 lb•ft (183 N•m)
- 120 amp alternator
- Air cleaner - dual element
- Anti-freeze solution to -34° F
- Fuel tank - 20 gal. (U.S.)
- Spark Arresting Diesel Oxidation Catalyst (DOC) Muffler
- Charged Air Cooler (CAC)
- 3-stack, after cooler, radiator, oil cooler configuration
- Glow Plugs
- Maintenance free 925 CCA battery with master disconnect

OPERATOR'S PROTECTIVE STRUCTURE:
- ROPS/FOPS Level 1 canopy with side screens
- Control lockout system
- Tilt forward ROPS/FOPS
- Electric parking brake control
- Electronic Hand throttle
- Electronic Foot throttle

OPERATOR'S PROTECTIVE STRUCTURE (Continued):
- 2 Speed Mechanical H-Pattern hand controls
- Operator's compartment floor cleanout
- Rear window with emergency escape
- Padded seat bar with integral arm rests
- Suspension Seat, vinyl with 2" retractable lap seat belt
- Foot rest
- Dome Light
- 12V Power plug socket
- Cup holder
- Tool Pocket
- Top window
- Headliner
- Alarm package (backup and horn)

OTHER STANDARD FEATURES:
- Lights - 2 front, 2 side, 2 rear flood (halogen)
- Heavy Duty Front Lights
- Pre-wired for rotating beacon
- Service access hood, lockable
- Single point daily service
- Tail lights
- Remote oil drain
- Remote Oil and Fuel Filters
- Block Heater
- Debirs Ingression Sealing

INSTRUMENTATION:
- Advanced Instrument Cluster with Hour meter, fuel guage, engine and oil temperature gauge, diagnostic features and security lock-out
- Warning lights with alarms:
  - Engine coolant temperature
  - Systems Critical Stop
  - Electronic System Indicator
  - Engine System Indicator
  - Hydraulic System Indicator
  - Hydraulic oil temperature
- Warning alarms:
  - Battery voltage (plus display)

SR175 & SV185 T4 FINAL SKID STEER LOADER
US PRICE LIST

(Ex Works Wichita, KS)

Standard Equipment

INSTRUMENTATION (Continued):
- Indicator Light:
  - Engine preheat
  - Parking brake
  - Seat bar reminder

DRIVE:
- Manual controlled hydrostatic four wheel drive
- Spring applied hydraulic release (SAHR) disc parking brake
- Dynamic braking
- ASA #80 drive chain

HYDRAULICS:
- 6 micron oil filtration system
- 3 spool loader control valve
- Auxiliary hydraulics, Proportional thumb wheel activated: loader arm mounted with ISO specification flat face "connect-under-pressure" disconnects
  - Including case drain
- Heavy duty hydraulic oil cooler
- Loader arm float position
- Auxiliary hydraulic function lockout override
- Loader arm circuit lockout override
- Self Level
- Ride Control

LOADER:
- Mechanical attachment coupler
- For SR175:
  - Radial arm geometry
  - Loader lift arm support strut
  - SAE operating load: 1750 lbs.
  - Tipping load: 3500 lbs.
- For SV185:
  - Vertical Lift Geometry
  - In-CAB loader lock
  - SAE operating load: 1850 lbs.
  - Tipping load: 3700 lbs.

TIRES
- 10 X 16.5 Heavy Duty - 64 inch Over-the-Tire Width (OTW)
- Galaxy XD2002

SR175 & SV185 T4 FINAL SKID STEER LOADER
US PRICE LIST

(Ex Works Wichita, KS)

Models

COMMERCIAL MODEL	Weight	Factory Data	List Price
SR175-T4 FINAL	7,565 LB		$44,208.00
SV185-T4 FINAL	7,565 LB		$47,260.00

SR175 & SV185 T4 FINAL SKID STEER LOADER
US PRICE LIST

(Ex Works Wichita, KS)

Factory Supplied Options

Order Code	Description	Weight	Factory Data	List Price

CONTROLS AND TRANSMISSION

SD_01401 DRIVE CONTROL TYPE

		761040	Hand Controls (H-Pattern)			No Charge
		761041	Foot and Hand Controls			No Charge
		761042	E-H Controls			No Charge

SD_01100 CONTROLS LEVEL

		761028	1 Speed Mechanical Controls			($1,400.00)
		761029	2 Speed Mechanical Controls			No Charge
		761031	2 Speed E-H Controls **Electro-Hydraulic Switchable (ISO-H Pattern) Controls with Two Speed**			$2,245.00

ROPS/CAB

SD_05009 CAB

		761043	Open Cab (No Heat or HVAC) **with top window and keyed start**			No Charge
		761046	Enclosed Cab with Heater **Includes side windows, front glass door with wiper, shoulder belt, radio with speakers and keyless start**			$4,474.00
		761045	Enclosed Cab with Heater & AC **Includes side windows, front glass door with wiper, shoulder belt, radio with speakers and keyless start**			$6,069.00
		761184	Enclosed Cab w/Heat -Demo Door **Includes side windows, 1/2" polycarbonate front door with wiper, shoulder belt, radio with speakers and keyless start**			$6,383.00
		761183	Enclosed Cab w/HVAC -Demo Door **Includes side windows, 1/2" polycarbonate front door with wiper, shoulder belt, radio with speakers and keyless start**			$7,977.00

SD_05016 OPEN CAB TRIM

		X05016X	No Open Cab Interior Trim Pkg			No Charge
		761186	Open Cab Interior Trim Package **For use with Open Cab. Covers interior sides and rear.**			$330.00

SD_05185 CAB SEAT

		761050	Non Suspension Seat			($350.00)

SR175 & SV185 T4 FINAL SKID STEER LOADER
US PRICE LIST

(Ex Works Wichita, KS)

		761052	Suspension Seat (Vinyl)			No Charge
		761062	Air Ride Suspension Seat **(Fabric) with temperature control (may not be ordered with Open Cab option 761043)**			$624.00

SD_K6480 HEAVY DUTY FRONT LIGHTS

		XK6480X	No Heavy Duty Front Lights			($100.00)
		761201	Heavy Duty Front Lights			No Charge

COUPLER

SD_K5101 COUPLERS

		726003	Manual Coupler			No Charge
		726004	Hydraulic Coupler			$1,126.00

BLOCK HEATER

SD_02086 BLOCK HEATER

		X02086X	No Block Heater			($125.00)
		761048	Block Heater (120V)			No Charge

OPERATOR MANUALS

SD_32035 LANGUAGE OPTIONS

		761085	English USA			No Charge
		761088	French Canadian			No Charge
		761097	Spanish Latin American			No Charge

OPTIONAL PACKAGES

SD_01201 OPTION PACKAGES

		761032	Standard Equipment Only			
			if MODEL is SV185			($950.00)
			if MODEL is SR175			($950.00)
		761034	Front Electric/Multi-Function **Contains Front Electric (Multi-Function) for Standard Auxiliaries**			($587.00)
		761033	Performance Package **Contains ON/OFF One-Way Self Leveling and Ride Control**			No Charge
		761035	Performance w/Front Electric **Contains ON/OFF One-Way Self Leveling, Ride Control and Front Electric**			$669.00
		761036	High Flow Package **Contains High Flow Hydraulics with Front Electric**			$1,421.00

SR175 & SV185 T4 FINAL SKID STEER LOADER
US PRICE LIST

(Ex Works Wichita, KS)

		761037	High Flow Plus Package **Contains Front Electric, High Flow Hydraulics,** **ON/OFF One-way Self Leveling and Ride Control**			$2,678.00

TIRES

SD_16068 TIRE OPTIONS

		8501707	10x16.5 Heavy Duty (64 OTW) **8PR Stamped Center - Galaxy XD2002**			No Charge
		8501807	10x16.5 Premium (64 OTW) **8PR Stamped Center - Galaxy Beefy Baby II**			$278.00
		8501907	10x16.5 Premium-Liner (64 OTW) **8PR Stamped Center- Galaxy Beefy Baby II**			$453.00
		8502007	10x16.5 Severe Duty (64 OTW) **10PR Stamped Center - Galaxy Hulk**			$474.00
		8502107	10x16.5 Non-Pneumatic (64 OTW) **10PR Welded Plate Center - Solid Flex**			$3,523.00
		8503107	12x16.5 Heavy Duty (70 OTW) **10PR Stamped Center - Galaxy XD2002**			$371.00
		8503207	12x16.5 Premium (70 OTW) **10PR Welded Plate Center - Galaxy Beefy Baby II**			$592.00
		8503307	12x16.5 Premium-Liner (70 OTW) **10PR Welded Plate Center - Galaxy Beefy Baby II**			$762.00

FRONT ATTACHMENTS

BUCKETS

SD_K5231 BUCKETS

		XK5231X	No Bucket			No Charge
Dirt & Foundry Bucket						
		761124	66" Dirt & Foundry Bucket **(1676 mm), 15.2 cu. ft. Heaped Capacity**			$942.00
		761125	72" Dirt & Foundry Bucket **(1829 mm), 16.7 cu. ft. Heaped Capacity**			$1,071.00
		761126	78" Dirt & Foundry Bucket **(1981 mm), 18.4 cu. ft. Heaped Capacity**			$1,112.00
Heavy Duty Dirt Bucket						
		761141	66" Heavy Duty Dirt Bucket **(1676 mm), 13.3 cu. ft. Heaped Capacity**			$1,215.00
		761142	72" Heavy Duty Dirt Bucket **(1829 mm), 14.6 cu. ft. Heaped Capacity**			$1,329.00
		761143	78" Heavy Duty Dirt Bucket **(1981 mm), 15.9 cu. ft. Heaped Capacity**			$1,442.00

SR175 & SV185 T4 FINAL SKID STEER LOADER
US PRICE LIST

(Ex Works Wichita, KS)

Light Material Bucket						
		761136	72" Light Material Bucket **(1829 mm), 23.7 cu. ft. Heaped Capacity**			$901.00
		761137	84" Light Material Bucket **(2134 mm), 27.9 cu. ft. Heaped Capacity**			$1,051.00
Low Profile Buckets						
		761128	66" Low Profile Bucket **(1676 mm), 13.2 cu. ft. Heaped Capacity**			$886.00
		761129	72" Low Profile Bucket **(1829 mm), 14.5 cu. ft. Heaped Capacity**			$968.00
Low Profile Extended Bucket						
		761131	66" Low Profile Extended **(1676 mm), 15.5 cu. ft. Heaped Capacity**			$989.00
		761132	72" Low Profile Extended **(1829 mm), 17.1 cu. ft. Heaped Capacity**			$1,076.00
		761133	78" Low Profile Extended **(1981 mm), 18.6 cu. ft. Heaped Capacity**			$1,164.00
		761134	84" Low Profile Extended **(2134 mm), 20.2 cu. ft. Heaped Capacity**			$1,257.00
Manure & Slurry Bucket						
		761139	72" Manure-Slurry Bucket **(1829 mm), 19.1 cu. ft. Heaped Capacity**			$917.00
		761140	84" Manure-Slurry Bucket **(2134 mm), 22.5 cu. ft. Heaped Capacity**			$1,066.00

SPILL GUARDS

SD_K5400 SPILL GUARDS

		XK5400X	No Spill Guard			No Charge
		761176	66" Spill Guard **For use with Heavy Duty Buckets only**			$196.00
		761177	72" Spill Guard **For use with Heavy Duty Buckets only**			$216.00
		761178	78" Spill Guard **For use with Heavy Duty Buckets only**			$237.00

BOLT ON CUTTING EDGES

SD_K6399 BOLT ON CUTTING EDGE

		XK6399X	No Bolt on Cutting Edge			No Charge
		761146	66" Bolt on Cutting Edge			$232.00
		761147	72" Bolt on Cutting Edge			$258.00
		761148	78" Bolt on Cutting Edge			$278.00
		761149	84" Bolt on Cutting Edge			$299.00

SR175 & SV185 T4 FINAL SKID STEER LOADER
US PRICE LIST

(Ex Works Wichita, KS)

MOVE TO BIC

SD_K6440 OFF-SITE SERVICE

		XK6440X	No Offsite Service Arrangement			No Charge
		761175	Offsite Service Arrangement			No Charge

SPECIAL PAINT

SD_50103 SPECIAL PAINT

		X50103X	No Special Paint			No Charge
		726029	Special Paint **The price listed is for a color change only from the standard factory color: CNH #86609760 (MS42-Tan). All Special Color formulations will be applied using approved factory processes and materials. Metallic or other special formulations and/or materials are not available. A color chip must be provided to CNH for non CNH colors. A minimum lead time of 8 business weeks will be required prior to production. Unless specified, regular production decals will be applied. Requests can be made that decals not be applied. However, SAFETY decals MUST BE APPLIED in all cases. The following components remain CNH grey: lift & bucket cylinders, front coupler and attachments, ROPS, side screens, rear hood, upper chassis and control links.**			$3,213.00

TELEMATICS

SD_K6450 TELEMATICS

		XK6450X	No Telematics			No Charge
		761187	CASE SiteWatch Telematics			$874.00

SR175 & SV185 T4 FINAL SKID STEER LOADER
US PRICE LIST

(Ex Works Wichita, KS)

Factory Supplied Attachments

Order Code			Description	Weight	Factory Data	List Price
Basic Attachments						
		735030006	Demo Rear Door Insert	32 LB		$330.00
		735006006	Beacon Kit	1 LB		$165.00
		735007006	4-Corner LED Strobe Kit Must order connector. Reference dependency matrix.	24 LB		$536.00
		735159006	Heater Complete Must order applicable harness. Reference dependency matrix.	135 LB		$1,472.00
		735158006	HVAC Complete For use with SR175 Tier 3 Must order applicable harness. Reference dependency matrix.	346 LB		$3,162.00
		735158026	HVAC Complete For use with SV185 Tier 3 Must order applicable harness. Reference dependency matrix.	347 LB		$3,162.00
		735158086	HVAC Complete For use with SR175 Tier 4 Must order applicable harness. Reference dependency matrix.	330 LB		$3,162.00
		735158126	HVAC Complete For use with SV185 Tier 4 Must order applicable harness. Reference dependency matrix.	330 LB		$3,162.00
		735146006	Three Point Seat Belt	4 LB		$250.00
		735011006	Glass Front Door Kit Center mounted wiper Requires three point seat belt. Must order applicable harness. Reference dependency matrix.	182 LB		$1,653.00
		735012006	Demo Front Door Kit Center mounted wiper Requires three point seat belt. Must order applicable harness. Reference dependency matrix.	182 LB		$2,905.00
		735013006	Cab Side Windows Kit	139 LB		$927.00
		735016006	Radio Kit Must order applicable harness. Reference dependency matrix.	16 LB		$443.00
		735150006	Open Cab Interior Trim Kit For use with Open Cab. Covers interior sides and rear.	20 LB		$399.00
		735020056	Road Light Kit For use with SV185 Must order applicable harness. Reference dependency matrix.	18 LB		$649.00
		735020066	Road Light Kit For use with SR175 and SR200/SR210 Must order applicable harness. Reference dependency matrix.	111 LB		$649.00
		735124006	Side Lamp Kit	6 LB		$272.00
		735021006	Multi-Function Front Electrical Mech Kit For use with SR175 and SR200/SR210 Must order applicable handle. Reference dependency matrix.	11 LB		$294.00
		735021016	Multi-Function Front Electrical Mech Kit For use with SV185 Must order applicable handle. Reference dependency matrix.	11 LB		$294.00
		735125006	Multi-Function Front Electrical E-H Kit For use with SR175 and SR200/SR210 Must order applicable handle. Reference dependency matrix.	11 LB		$294.00

SR175 & SV185 T4 FINAL SKID STEER LOADER
US PRICE LIST

(Ex Works Wichita, KS)

		735125016	Multi-Function Front Electrical E-H Kit For use with SV185 Must order applicable handle. Reference dependency matrix.	11 LB		$294.00
		735022016	One Way Self Level Kit For use with SR175	14 LB		$520.00
		735022036	One Way Self Level Kit For use with SV185	15 LB		$520.00
		735023006	Ride Control Kit Must order applicable handle. Reference dependency martix.	33 LB		$515.00
		735024006	Hydraulic Coupler Kit For use with SR175 and SR220/SR210 Must order applicable harness. Reference dependency matrix.	160 LB		$1,324.00
		735024016	Hydraulic Coupler Kit For use with SV185 Must order applicable harness. Reference dependency matrix.	159 LB		$1,324.00
		735025006	High Flow Auxiliary Kit For use with SV185 Tier 3 Must order applicable harness. Reference dependency matrix.	189 LB		$2,699.00
		735025096	High Flow Auxiliary Kit For use with SR175 Tier 4 Must order applicable harness. Reference dependency matrix.	188 LB		$2,699.00
		735025086	High Flow Auxiliary Kit For use with SV185 Tier 4 Must order applicable harness. Reference dependency matrix.	193 LB		$2,699.00
		735025106	High Flow Auxiliary Kit For use with SR175 Tier 3 models Must order applicable harness. Reference dependency matrix.	192 LB		$2,699.00
		735027006	Second Hydraulic Front Auxiliary Kit For use with SV185 Must order applicable handle. Reference dependency matrix.	79 LB		$1,103.00
		735027016	Second Hydraulic Front Auxiliary Kit For use with SR175 and SR200/SR210 Must order applicable handle. Reference dependency matrix.	81 LB		$1,103.00
		735036016	4-Point Lift Hook Kit	11 LB		$238.00
		735037016	Single Point Lift Hook Kit For use with SR175 and SR200/SR210	284 LB		$1,102.00
		735037036	Single Point Lift Hook Kit For use with SV185	276 LB		$1,102.00
		735038006	FOPS Level 2 Modification Kit	61 LB		$368.00
		735039016	Extra Counterweight Kit	202 LB		$443.00
		735040096	Aspirator Kit For use with SR175 Tier 4	12 LB		$340.00
		735040106	Aspirator Kit For use with SV185 Tier 4	13 LB		$340.00
		735040126	Aspirator Kit For use with SV185 Tier 3	13 LB		$340.00
		735040046	Aspirator Kit For use with SR175 Tier 3	15 LB		$340.00
		735042006	Interior Mirror Kit	4 LB		$62.00
		735045006	Foot Control Conversion Kit Not available for units equipped with Electro Hydraulic (EH) controls. For use with Tier 3	54 LB		$659.00

SR175 & SV185 T4 FINAL SKID STEER LOADER
US PRICE LIST

(Ex Works Wichita, KS)

		735045046	Foot Control Conversion Kit Not available for units equipped with Electro Hydraulic (EH) controls. For use with Tier 4	52 LB		$659.00
		735046016	Hand Control Conversion Kit For use with Tier 3	76 LB		$883.00
		735046046	Hand Control Conversion Kit For use with Tier 4	76 LB		$883.00
		735047016	120V Block Heater Kit	3 LB		$221.00
		735048016	220V Block Heater Kit	3 LB		$221.00
		735142006	Cylinder Guard Kit	21 LB		$792.00
		735151016	Debris Seal Kit Reduces debris ingression to engine compartment and chassis For use with SV185 models built after July 2012	20 LB		$346.00
		735151026	Debris Seal Kit Reduces debris ingression to engine compartment and chassis For use with SR175 and SR200/SR210 models built after July 2012	20 LB		$361.00
		735152016	New Hood with Debris Seal Kit Contains new hood and additional sealing items Reduces debris ingression to engine compartment and chassis For use with SV185 Tier 3 models built prior to July 2012	86 LB		$835.00
		735152026	New Hood with Debris Seal Kit Contains new hood and additional sealing items Reduces debris ingression to engine compartment and chassis For use with SR175 and SR200 Tier 3 models built prior to July 2012	128 LB		$800.00
		735161006	Heavy Duty Front Lights - Radial Model For use with Radial Models	26 LB		$429.00
		735161016	Heavy Duty Front Lights - Vertical Model For use with Vertical Models	26 LB		$429.00

Handles - E-H Models

		735126006	LH EH Handle Kit (NO 2nd Aux) Adds Front Electric on all models except SR130 and SR160	2 LB		$191.00
		735127006	RH EH Handle Kit Adds Front Electric on all models except SR130 and SR160	2 LB		$191.00
		735132006	LH EH Handle Kit (WITH 2nd Aux) Adds Second Auxiliary with Front Electric.	2 LB		$191.00

Handles - Mechanical Models

		735134006	LH Mechanical Handle Kit (NO 2nd Aux) Adds Front Electric.	2 LB		$191.00
		735135006	LH Mechanical Handle Kit (WITH 2nd Aux) Adds Second Auxiliary with Front Electric.	2 LB		$191.00
		735136006	RH Mechanical Handle Kit Adds Front Electric.	2 LB		$191.00

Pallet Forks

		735075006	Pallet Fork Frame w/48" Tines	540 LB		$1,355.00

SR175 & SV185 T4 FINAL SKID STEER LOADER
US PRICE LIST

(Ex Works Wichita, KS)

Dirt & Foundry Bucket

		735054016	66" Dirt & Foundry Bucket (1676 mm), 15.2 cu. ft. Heaped Capacity	374 LB		$942.00
		735055016	72" Dirt & Foundry Bucket (1829 mm), 16.7 cu. ft. Heaped Capacity	407 LB		$1,071.00
		735056016	78" Dirt & Foundry Bucket (1981 mm), 18.4 cu. ft. Heaped Capacity	429 LB		$1,112.00

Low Profile Bucket

		735058016	66" Low Profile Bucket (1676 mm), 13.2 cu. ft. Heaped Capacity	431 LB		$886.00
		735059016	72" Low Profile Bucket (1829 mm), 14.5 cu. ft. Heaped Capacity	471 LB		$968.00

Low Profile Extended Bucket

		735061016	66" Low Profile Extended Bucket (1676 mm), 15.5 cu. ft. Heaped Capacity	460 LB		$989.00
		735062016	72" Low Profile Extended Bucket (1829 mm), 17.1 cu. ft. Heaped Capacity	504 LB		$1,076.00
		735063016	78" Low Profile Extended Bucket (1981 mm), 18.6 cu. ft. Heaped Capacity	531 LB		$1,164.00
		735064016	84" Low Profile Extended Bucket (2134 mm), 20.2 cu. ft. Heaped Capacity	607 LB		$1,257.00

Light Material Bucket

		735066016	72" Light Material Bucket (1829 mm), 23.7 cu. ft. Heaped Capacity	466 LB		$901.00
		735067016	84" Light Material Bucket (2134 mm), 27.9 cu. ft. Heaped Capacity	532 LB		$1,051.00

Manure & Slurry Bucket

		735069016	72" Manure-Slurry Bucket (1829 mm), 19.1 cu. ft. Heaped Capacity	469 LB		$917.00
		735070016	84" Manure-Slurry Bucket (2134 mm), 22.5 cu. ft. Heaped Capacity	535 LB		$1,066.00

Heavy Duty Dirt Bucket

		735071016	66" Heavy Duty Dirt Bucket (1676 mm), 13.3 cu. ft. Heaped Capacity	449 LB		$1,215.00
		735072016	72" Heavy Duty Dirt Bucket (1829 mm), 14.6 cu. ft. Heaped Capacity	501 LB		$1,329.00
		735073016	78" Heavy Duty Dirt Bucket (1981 mm), 15.9 cu. ft. Heaped Capacity	526 LB		$1,442.00

Heavy Duty Tire Assembly

		735087006	10x16.5 Heavy Duty (64 OTW) RH Kit Galaxy XD2002 Reference Loader Stop matrix. 1 tire assembly	117 LB		$354.00
		735108006	10x16.5 Heavy Duty (64 OTW) LH Kit Galaxy XD2002 Reference Loader Stop matrix. 1 tire assembly	117 LB		$354.00

SR175 & SV185 T4 FINAL SKID STEER LOADER
US PRICE LIST

(Ex Works Wichita, KS)

		735094006	12x16.5 Heavy Duty (70 OTW) RH Kit Galaxy XD2002 Reference Loader Stop matrix. 1 tire assembly	141 LB		$447.00
		735114006	12x16.5 Heavy Duty (70 OTW) LH Kit Galaxy XD2002 Reference Loader Stop matrix. 1 tire assembly	141 LB		$447.00

Premium Tire Assembly

		735088006	10x16.5 Premium (64 OTW) RH Kit Galaxy Beefy Baby II Reference Loader Stop matrix. 1 tire assembly	127 LB		$425.00
		735109006	10x16.5 Premium (64 OTW) LH Kit Galaxy Beefy Baby II Reference Loader Stop matrix. 1 tire assembly	127 LB		$425.00
		735095006	12x16.5 Premium (70 OTW) RH Kit Galaxy Beefy Baby II Reference Loader Stop matrix. 1 tire assembly	152 LB		$546.00
		735115006	12x16.5 Premium (70 OTW) LH Kit Galaxy Beefy Baby II Reference Loader Stop matrix. 1 tire assembly	152 LB		$546.00

Premium-Liner Tire Assembly

		735089006	10x16.5 Premium-Liner (64 OTW) RH Kit Galaxy Beefy Baby II Reference Loader Stop matrix. 1 tire assembly	90 LB		$470.00
		735110006	10x16.5 Premium-Liner (64 OTW) LH Kit Galaxy Beefy Baby II Reference Loader Stop matrix. 1 tire assembly	90 LB		$470.00
		735096006	12x16.5 Premium-Liner (70 OTW) RH Kit Galaxy Beefy Baby II Reference Loader Stop matrix. 1 tire assembly	152 LB		$680.00
		735116006	12x16.5 Premium-Liner (70 OTW) LH Kit Galaxy Beefy Baby II Reference Loader Stop matrix. 1 tire assembly	152 LB		$680.00

Non-Pneumatic Tire Assembly

		735091006	10x16.5 Non-Pneumatic (64 OTW) RH Kit Solid Flex Reference Loader Stop matrix. 1 tire assembly	251 LB		$1,098.00
		735112006	10x16.5 Non-Pneumatic (64 OTW) LH Kit Solid Flex Reference Loader Stop matrix. 1 tire assembly	251 LB		$1,098.00

Severe Duty Tire Assembly

		735090006	10x16.5 Severe Duty (64 OTW) RH Kit Galaxy Hulk Reference Loader Stop matrix. 1 tire assembly	147 LB		$524.00
		735111006	10x16.5 Severe Duty (64 OTW) LH Kit Galaxy Hulk Reference Loader Stop matrix. 1 tire assembly	147 LB		$524.00

SR210 T4 FINAL SKID STEER LOADER
US PRICE LIST

(Ex Works Wichita, KS)

Standard Equipment

ENGINE:
- FPT F5HFL463A water cooled diesel engine
- 207 CID (3.4 L) Turbo
- Tier 4 Final Certified
- Particulate Matter Catalyst
- High Pressure Common Rail (HPCR) Fuel Injection
- Horsepower:
  - Gross 74
  - Net 68
  - Peak torque 232 lb•ft (314 N•m)
- 120 amp alternator
- Air cleaner - dual element
- Anti-freeze solution to -34° F
- Fuel tank - 19.5 gal. (U.S.)
- Single Plane, Top and Bottom Oil Cooler/Radiator Configuration
- No maintenance belt
- Glow Plugs
- Maintenance free 925 CCA battery with master disconnect

OPERATOR'S PROTECTIVE STRUCTURE:
- ROPS/FOPS Level 1 canopy with side screens
- Control lockout system
- Tilt forward ROPS/FOPS
- Electric parking brake control
- Hand throttle
- Foot throttle
- 2 Speed Low effort ergonomic H-Pattern hand controls
- Operator's compartment floor cleanout
- Rear window with emergency escape
- Padded seat bar with integral arm rests
- Suspension Seat, vinyl with 2" retractable lap seat belt
- Foot rest
- Dome Light
- 12V Power plug socket
- Cup holder
- Tool Pocket

OPERATOR'S PROTECTIVE STRUCTURE (continued):
- Top window
- Headliner
- Alarm package (backup and horn)

OTHER STANDARD FEATURES:
- Lights - 2 front, 2 side, 2 rear flood (halogen)
- Heavy Duty Front Lights
- Pre-wired for rotating beacon
- Service access hood, lockable
- Single point daily service
- Tail lights
- Remote oil drain
- Remote Oil and Fuel Filters
- Block Heater
- Debris Ingression Sealing

INSTRUMENTATION:
- Advanced Instrument Cluster with Hour meter, fuel guage, engine and oil temperature gauge, diagnostic features and security lock-out
- Warning lights with alarms:
  - Engine coolant temperature
  - Systems Critical Stop
  - Electronic System Indicator
  - Engine System Indicator
  - Hydraulic System Indicator
  - Hydraulic oil temperature
- Warning alarms:
  - Battery voltage (plus display)
- Indicator Light:
  - Engine preheat
  - Parking brake
  - Seat bar reminder

DRIVE:
- Servo assist controlled hydrostatic four wheel drive
- Spring applied hydraulic release (SAHR) disc parking brake
- Dynamic braking
- ASA #100 drive chain

SR210 T4 FINAL SKID STEER LOADER
US PRICE LIST

(Ex Works Wichita, KS)

Standard Equipment

HYDRAULICS:
- 6 micron oil filtration system
- 3 spool loader control valve
- Auxiliary hydraulics, Proportional thumb wheel activated: loader arm mounted with ISO specification flat face "connect-under-pressure" disconnects
  - Including case drain
- Heavy duty hydraulic oil cooler
- Loader arm float position
- Auxiliary hydraulic function lockout override
- Loader arm circuit lockout override
- Self Level
- Ride Control

LOADER:
- Mechanical attachment coupler
- Radial arm geometry
- Loader lift arm support strut
- SAE operating load: 2100 lbs.
- Tipping load: 4200 lbs.

TIRES
- 12 X 16.5 Heavy Duty - 70 inch
- Over-the-Tire Width (OTW)
- Galaxy XD2002

SR210 T4 FINAL SKID STEER LOADER
US PRICE LIST

(Ex Works Wichita, KS)

Models

COMMERCIAL MODEL	Weight	Factory Data	List Price
SR210-T4 FINAL	7,565 LB		$49,908.00

Packet			Description	Weight	Factory Data	List Price
Economy Package						($1,150.00)
SD_01201-OPTION PACKAGES			Standard Equipment Only			
SD_02086-BLOCK HEATER			Block Heater (120V)			
SD_05009-CAB			Open Cab (No Heat or HVAC)			
SD_05016-OPEN CAB TRIM			No Open Cab Interior Trim Pkg			
SD_05185-CAB SEAT			Suspension Seat (Vinyl)			
SD_K5101-COUPLERS			Manual Coupler			
SD_K6480-HEAVY DUTY FRONT LIGHTS			Heavy Duty Front Lights			
Economy Plus Package						$1237.60
SD_01201-OPTION PACKAGES			Performance Package			
SD_02086-BLOCK HEATER			Block Heater (120V)			
SD_05009-CAB			Open Cab (No Heat or HVAC)			
SD_05016-OPEN CAB TRIM			Open Cab Interior Trim Package			
SD_05185-CAB SEAT			Suspension Seat (Vinyl)			
SD_K5101-COUPLERS			Hydraulic Coupler			
SD_K6480-HEAVY DUTY FRONT LIGHTS			Heavy Duty Front Lights			
Power Package						$8922.45
SD_01201-OPTION PACKAGES			High Flow Plus Package			
SD_02086-BLOCK HEATER			Block Heater (120V)			
SD_05009-CAB			Enclosed Cab with Heater & AC			
SD_05185-CAB SEAT			Air Ride Suspension Seat			
SD_K5101-COUPLERS			Hydraulic Coupler			
SD_K6480-HEAVY DUTY FRONT LIGHTS			Heavy Duty Front Lights			
Productivity Package						$7214.80
SD_01201-OPTION PACKAGES			Performance w/Front Electric			
SD_02086-BLOCK HEATER			Block Heater (120V)			
SD_05009-CAB			Enclosed Cab with Heater & AC			
SD_05185-CAB SEAT			Air Ride Suspension Seat			
SD_K5101-COUPLERS			Hydraulic Coupler			
SD_K6480-HEAVY DUTY FRONT LIGHTS			Heavy Duty Front Lights			

SR210 T4 FINAL SKID STEER LOADER
US PRICE LIST

(Ex Works Wichita, KS)

Factory Supplied Options

Order Code	Description	Weight	Factory Data	List Price

CONTROLS AND TRANSMISSION

SD_01401 DRIVE CONTROL TYPE

		761040	Hand Controls (H-Pattern)			No Charge
		761041	Foot and Hand Controls			No Charge
		761042	E-H Controls			No Charge

SD_01100 CONTROLS LEVEL

		761028	1 Speed Mechanical Controls			($1,400.00)
		761029	2 Speed Mechanical Controls			No Charge
		761031	2 Speed E-H Controls **Electro-Hydraulic Switchable (ISO-H Pattern) Controls with Two Speed**			$2,245.00

ROPS/CAB

SD_05009 CAB

		761043	Open Cab (No Heat or HVAC) **with top window and keyed start**			No Charge
		761046	Enclosed Cab with Heater **Includes side windows, front glass door with wiper, shoulder belt, radio with speakers and keyless start**			$4,474.00
		761045	Enclosed Cab with Heater & AC **Includes side windows, front glass door with wiper, shoulder belt, radio with speakers and keyless start**			$6,069.00
		761184	Enclosed Cab w/Heat -Demo Door **Includes side windows, 1/2" polycarbonate front door with wiper, shoulder belt, radio with speakers and keyless start**			$6,383.00
		761183	Enclosed Cab w/HVAC -Demo Door **Includes side windows, 1/2" polycarbonate front door with wiper, shoulder belt, radio with speakers and keyless start**			$7,977.00

SD_05016 OPEN CAB TRIM

		X05016X	No Open Cab Interior Trim Pkg			No Charge
		761186	Open Cab Interior Trim Package **For use with Open Cab. Covers interior sides and rear.**			$330.00

SD_05185 CAB SEAT

		761050	Non Suspension Seat			($350.00)

SR210 T4 FINAL SKID STEER LOADER
US PRICE LIST

(Ex Works Wichita, KS)

		761052	Suspension Seat (Vinyl)			No Charge
		761062	Air Ride Suspension Seat **(Fabric) with temperature control (may not be ordered with Open Cab option 761043)**			$624.00

SD_K6480 HEAVY DUTY FRONT LIGHTS

		XK6480X	No Heavy Duty Front Lights			($100.00)
		761201	Heavy Duty Front Lights			No Charge

COUPLER

SD_K5101 COUPLERS

		726003	Manual Coupler			No Charge
		726004	Hydraulic Coupler			$1,126.00

BLOCK HEATER

SD_02086 BLOCK HEATER

		X02086X	No Block Heater			($125.00)
		761048	Block Heater (120V)			No Charge

OPERATOR MANUALS

SD_32035 LANGUAGE OPTIONS

		761085	English USA			No Charge
		761088	French Canadian			No Charge
		761097	Spanish Latin American			No Charge

OPTIONAL PACKAGES

SD_01201 OPTION PACKAGES

		761032	Standard Equipment Only			($950.00)
		761034	Front Electric/Multi-Function **Contains Front Electric (Multi-Function) for Standard Auxiliaries**			($587.00)
		761033	Performance Package **Contains ON/OFF One-Way Self Leveling and Ride Control**			No Charge
		761035	Performance w/Front Electric **Contains ON/OFF One-Way Self Leveling, Ride Control and Front Electric**			$669.00
		761036	High Flow Package **Contains High Flow Hydraulics with Front Electric**			$1,421.00

SR210 T4 FINAL SKID STEER LOADER
US PRICE LIST

(Ex Works Wichita, KS)

		761037	High Flow Plus Package **Contains Front Electric, High Flow Hydraulics,** **ON/OFF One-way Self Leveling and Ride Control**			$2,678.00

TIRES

SD_16068 TIRE OPTIONS

		8501707	10x16.5 Heavy Duty (64 OTW) **8PR Stamped Center - Galaxy XD2002**			($371.00)
		8501807	10x16.5 Premium (64 OTW) **8PR Stamped Center - Galaxy Beefy Baby II**			($93.00)
		8501907	10x16.5 Premium-Liner (64 OTW) **8PR Stamped Center- Galaxy Beefy Baby II**			$82.00
		8502007	10x16.5 Severe Duty (64 OTW) **10PR Stamped Center - Galaxy Hulk**			$103.00
		8502107	10x16.5 Non-Pneumatic (64 OTW) **10PR Welded Plate Center - Solid Flex**			$3,152.00
		8503107	12x16.5 Heavy Duty (70 OTW) **10PR Stamped Center - Galaxy XD2002**			No Charge
		8503207	12x16.5 Premium (70 OTW) **10PR Welded Plate Center - Galaxy Beefy Baby II**			$221.00
		8503307	12x16.5 Premium-Liner (70 OTW) **10PR Welded Plate Center - Galaxy Beefy Baby II**			$391.00
		8503407	12x16.5 Severe Duty (70 OTW) **12PR Welded Plate Center - Galaxy Hulk**			$536.00
		8503507	12x16.5 Mining (70 OTW) **12PR Welded Plate Center - Galaxy King Kong**			$639.00
		8503607	12x16.5 Non-Pneumatic (70 OTW) **Welded Plate Center - Solid Flex**			$3,152.00
		8505007	33X15.5 Flotation (76 OTW) **12PR Welded Plate Center - Galaxy Hippo**			$371.00

FRONT ATTACHMENTS

BUCKETS

SD_K5231 BUCKETS

		XK5231X	No Bucket			No Charge
		Dirt & Foundry Bucket				
		761124	66" Dirt & Foundry Bucket **(1676 mm), 15.2 cu. ft. Heaped Capacity**			$942.00
		761125	72" Dirt & Foundry Bucket **(1829 mm), 16.7 cu. ft. Heaped Capacity**			$1,071.00
		761126	78" Dirt & Foundry Bucket **(1981 mm), 18.4 cu. ft. Heaped Capacity**			$1,112.00

SR210 T4 FINAL SKID STEER LOADER
US PRICE LIST

(Ex Works Wichita, KS)

		Heavy Duty Dirt Bucket				
		761141	66" Heavy Duty Dirt Bucket **(1676 mm), 13.3 cu. ft. Heaped Capacity**			$1,215.00
		761142	72" Heavy Duty Dirt Bucket **(1829 mm), 14.6 cu. ft. Heaped Capacity**			$1,329.00
		761143	78" Heavy Duty Dirt Bucket **(1981 mm), 15.9 cu. ft. Heaped Capacity**			$1,442.00
		Light Material Bucket				
		761136	72" Light Material Bucket **(1829 mm), 23.7 cu. ft. Heaped Capacity**			$901.00
		761137	84" Light Material Bucket **(2134 mm), 27.9 cu. ft. Heaped Capacity**			$1,051.00
		Low Profile Buckets				
		761128	66" Low Profile Bucket **(1676 mm), 13.2 cu. ft. Heaped Capacity**			$886.00
		761129	72" Low Profile Bucket **(1829 mm), 14.5 cu. ft. Heaped Capacity**			$968.00
		Low Profile Extended Bucket				
		761131	66" Low Profile Extended **(1676 mm), 15.5 cu. ft. Heaped Capacity**			$989.00
		761132	72" Low Profile Extended **(1829 mm), 17.1 cu. ft. Heaped Capacity**			$1,076.00
		761133	78" Low Profile Extended **(1981 mm), 18.6 cu. ft. Heaped Capacity**			$1,164.00
		761134	84" Low Profile Extended **(2134 mm), 20.2 cu. ft. Heaped Capacity**			$1,257.00
		Manure & Slurry Bucket				
		761139	72" Manure-Slurry Bucket **(1829 mm), 19.1 cu. ft. Heaped Capacity**			$917.00
		761140	84" Manure-Slurry Bucket **(2134 mm), 22.5 cu. ft. Heaped Capacity**			$1,066.00

SPILL GUARDS

SD_K5400 SPILL GUARDS

		XK5400X	No Spill Guard			No Charge
		761176	66" Spill Guard **For use with Heavy Duty Buckets only**			$196.00
		761177	72" Spill Guard **For use with Heavy Duty Buckets only**			$216.00
		761178	78" Spill Guard **For use with Heavy Duty Buckets only**			$237.00

BOLT ON CUTTING EDGES

SD_K6399 BOLT ON CUTTING EDGE

		XK6399X	No Bolt on Cutting Edge			No Charge
		761146	66" Bolt on Cutting Edge			$232.00

SR210 T4 FINAL SKID STEER LOADER
US PRICE LIST

(Ex Works Wichita, KS)

		761147	72" Bolt on Cutting Edge			$258.00
		761148	78" Bolt on Cutting Edge			$278.00
		761149	84" Bolt on Cutting Edge			$299.00

MOVE TO BIC

SD_K6440 OFF-SITE SERVICE

		XK6440X	No Offsite Service Arrangement			No Charge
		761175	Offsite Service Arrangement			No Charge

SPECIAL PAINT

SD_50103 SPECIAL PAINT

		X50103X	No Special Paint			No Charge
		726029	Special Paint **The price listed is for a color change only from the standard factory color: CNH #86609760 (MS42-Tan). All Special Color formulations will be applied using approved factory processes and materials. Metallic or other special formulations and/or materials are not available. A color chip must be provided to CNH for non CNH colors. A minimum lead time of 8 business weeks will be required prior to production. Unless specified, regular production decals will be applied. Requests can be made that decals not be applied. However, SAFETY decals MUST BE APPLIED in all cases. The following components remain CNH grey: lift & bucket cylinders, front coupler and attachments, ROPS, side screens, rear hood, upper chassis and control links.**			$3,213.00

TELEMATICS

SD_K6450 TELEMATICS

		XK6450X	No Telematics			No Charge
		761187	CASE SiteWatch Telematics			$874.00

SR210 T4 FINAL SKID STEER LOADER
US PRICE LIST

(Ex Works Wichita, KS)

Factory Supplied Attachments

Order Code			Description	Weight	Factory Data	List Price
Basic Attachments						
		735006006	Beacon Kit	1 LB		$165.00
		735007006	4-Corner LED Strobe Kit Must order connector. Reference dependency matrix.	24 LB		$536.00
		735159026	Heater Complete For use with Tier 3 Must order applicable harness. Reference dependency matrix.	137 LB		$1,472.00
		735159046	Heater Complete For use with Tier 4 Must order applicable harness. Reference dependency matrix.	141 LB		$1,472.00
		735158036	HVAC Complete For use with Tier 3 Must order applicable harness. Reference dependency matrix.	342 LB		$3,162.00
		735158106	HVAC Complete For use with Tier 4 Must order applicable harness. Reference dependency matrix.	332 LB		$3,162.00
		735146006	Three Point Seat Belt	4 LB		$250.00
		735011006	Glass Front Door Kit Center mounted wiper Requires three point seat belt. Must order applicable harness. Reference dependency matrix.	182 LB		$1,653.00
		735012006	Demo Front Door Kit Center mounted wiper Requires three point seat belt. Must order applicable harness. Reference dependency matrix.	182 LB		$2,905.00
		735013006	Cab Side Windows Kit	139 LB		$927.00
		735016006	Radio Kit Must order applicable harness. Reference dependency matrix.	16 LB		$443.00
		735150006	Open Cab Interior Trim Kit For use with Open Cab. Covers interior sides and rear.	20 LB		$399.00
		735020066	Road Light Kit For use with SR175 and SR200/SR210 Must order applicable harness. Reference dependency matrix.	111 LB		$649.00
		735124006	Side Lamp Kit	6 LB		$272.00
		735021006	Multi-Function Front Electrical Mech Kit For use with SR175 and SR200/SR210 Must order applicable handle. Reference dependency matrix.	11 LB		$294.00
		735125006	Multi-Function Front Electrical E-H Kit For use with SR175 and SR200/SR210 Must order applicable handle. Reference dependency matrix.	11 LB		$294.00
		735022046	One Way Self Level Kit	15 LB		$520.00
		735023006	Ride Control Kit Must order applicable handle. Reference dependency martix.	33 LB		$515.00
		735024006	Hydraulic Coupler Kit For use with SR175 and SR220/SR210 Must order applicable harness. Reference dependency matrix.	160 LB		$1,324.00
		735025016	High Flow Auxiliary Kit For use with Tier 3 Must order applicable harness. Reference dependency matrix.	189 LB		$2,699.00

SR210 T4 FINAL SKID STEER LOADER
US PRICE LIST

(Ex Works Wichita, KS)

		735025076	High Flow Auxiliary Kit For use with Tier 4 Must order applicable harness. Reference dependency matrix.	191 LB		$2,699.00
		735027016	Second Hydraulic Front Auxiliary Kit For use with SR175 and SR200/SR210 Must order applicable handle. Reference dependency matrix.	81 LB		$1,103.00
		735036016	4-Point Lift Hook Kit	11 LB		$238.00
		735037016	Single Point Lift Hook Kit For use with SR175 and SR200/SR210	284 LB		$1,102.00
		735038006	FOPS Level 2 Modification Kit	61 LB		$368.00
		735039016	Extra Counterweight Kit	202 LB		$443.00
		735040146	Aspirator Kit For use with Tier 4	14 LB		$340.00
		735040026	Aspirator Kit For use with Tier 3	12 LB		$340.00
		735042006	Interior Mirror Kit	4 LB		$62.00
		735045006	Foot Control Conversion Kit Not available for units equipped with Electro Hydraulic (EH) controls. For use with Tier 3	54 LB		$659.00
		735045046	Foot Control Conversion Kit Not available for units equipped with Electro Hydraulic (EH) controls. For use with Tier 4	52 LB		$659.00
		735046016	Hand Control Conversion Kit For use with Tier 3	76 LB		$883.00
		735046046	Hand Control Conversion Kit For use with Tier 4	76 LB		$883.00
		735047006	120V Block Heater Kit	6 LB		$221.00
		735048006	220V Block Heater Kit	6 LB		$221.00
		735142006	Cylinder Guard Kit	21 LB		$792.00
		735151026	Debris Seal Kit Reduces debris ingression to engine compartment and chassis For use with SR175 and SR200/SR210 models built after July 2012	20 LB		$361.00
		735152026	New Hood with Debris Seal Kit Contains new hood and additional sealing items Reduces debris ingression to engine compartment and chassis For use with SR175 and SR200 Tier 3 models built prior to July 2012	128 LB		$800.00
		735161006	Heavy Duty Front Lights - Radial Model For use with Radial Models	26 LB		$429.00

Handles - E-H Models

		735126006	LH EH Handle Kit (NO 2nd Aux) Adds Front Electric on all models except SR130 and SR160	2 LB		$191.00
		735127006	RH EH Handle Kit Adds Front Electric on all models except SR130 and SR160	2 LB		$191.00
		735132006	LH EH Handle Kit (WITH 2nd Aux) Adds Second Auxiliary with Front Electric.	2 LB		$191.00

SR210 T4 FINAL SKID STEER LOADER
US PRICE LIST

(Ex Works Wichita, KS)

Handles - Mechanical Models

		735134006	LH Mechanical Handle Kit (NO 2nd Aux) Adds Front Electric.	2 LB		$191.00
		735135006	LH Mechanical Handle Kit (WITH 2nd Aux) Adds Second Auxiliary with Front Electric.	2 LB		$191.00
		735136006	RH Mechanical Handle Kit Adds Front Electric.	2 LB		$191.00

Pallet Forks

		735075006	Pallet Fork Frame w/48" Tines	540 LB		$1,355.00

Dirt & Foundry Bucket

		735054016	66" Dirt & Foundry Bucket (1676 mm), 15.2 cu. ft. Heaped Capacity	374 LB		$942.00
		735055016	72" Dirt & Foundry Bucket (1829 mm), 16.7 cu. ft. Heaped Capacity	407 LB		$1,071.00
		735056016	78" Dirt & Foundry Bucket (1981 mm), 18.4 cu. ft. Heaped Capacity	429 LB		$1,112.00

Low Profile Bucket

		735058016	66" Low Profile Bucket (1676 mm), 13.2 cu. ft. Heaped Capacity	431 LB		$886.00
		735059016	72" Low Profile Bucket (1829 mm), 14.5 cu. ft. Heaped Capacity	471 LB		$968.00

Low Profile Extended Bucket

		735061016	66" Low Profile Extended Bucket (1676 mm), 15.5 cu. ft. Heaped Capacity	460 LB		$989.00
		735062016	72" Low Profile Extended Bucket (1829 mm), 17.1 cu. ft. Heaped Capacity	504 LB		$1,076.00
		735063016	78" Low Profile Extended Bucket (1981 mm), 18.6 cu. ft. Heaped Capacity	531 LB		$1,164.00
		735064016	84" Low Profile Extended Bucket (2134 mm), 20.2 cu. ft. Heaped Capacity	607 LB		$1,257.00

Light Material Bucket

		735066016	72" Light Material Bucket (1829 mm), 23.7 cu. ft. Heaped Capacity	466 LB		$901.00
		735067016	84" Light Material Bucket (2134 mm), 27.9 cu. ft. Heaped Capacity	532 LB		$1,051.00

Manure & Slurry Bucket

		735069016	72" Manure-Slurry Bucket (1829 mm), 19.1 cu. ft. Heaped Capacity	469 LB		$917.00
		735070016	84" Manure-Slurry Bucket (2134 mm), 22.5 cu. ft. Heaped Capacity	535 LB		$1,066.00

Heavy Duty Dirt Bucket

		735071016	66" Heavy Duty Dirt Bucket (1676 mm), 13.3 cu. ft. Heaped Capacity	449 LB		$1,215.00
		735072016	72" Heavy Duty Dirt Bucket (1829 mm), 14.6 cu. ft. Heaped Capacity	501 LB		$1,329.00

SR210 T4 FINAL SKID STEER LOADER
US PRICE LIST

(Ex Works Wichita, KS)

		735073016	78" Heavy Duty Dirt Bucket (1981 mm), 15.9 cu. ft. Heaped Capacity	526 LB		$1,442.00

Heavy Duty Tire Assembly

		735087006	10x16.5 Heavy Duty (64 OTW) RH Kit Galaxy XD2002 Reference Loader Stop matrix. 1 tire assembly	117 LB		$354.00
		735108006	10x16.5 Heavy Duty (64 OTW) LH Kit Galaxy XD2002 Reference Loader Stop matrix. 1 tire assembly	117 LB		$354.00
		735094006	12x16.5 Heavy Duty (70 OTW) RH Kit Galaxy XD2002 Reference Loader Stop matrix. 1 tire assembly	141 LB		$447.00
		735114006	12x16.5 Heavy Duty (70 OTW) LH Kit Galaxy XD2002 Reference Loader Stop matrix. 1 tire assembly	141 LB		$447.00

Premium Tire Assembly

		735088006	10x16.5 Premium (64 OTW) RH Kit Galaxy Beefy Baby II Reference Loader Stop matrix. 1 tire assembly	127 LB		$425.00
		735109006	10x16.5 Premium (64 OTW) LH Kit Galaxy Beefy Baby II Reference Loader Stop matrix. 1 tire assembly	127 LB		$425.00
		735095006	12x16.5 Premium (70 OTW) RH Kit Galaxy Beefy Baby II Reference Loader Stop matrix. 1 tire assembly	152 LB		$546.00
		735115006	12x16.5 Premium (70 OTW) LH Kit Galaxy Beefy Baby II Reference Loader Stop matrix. 1 tire assembly	152 LB		$546.00

Premium-Liner Tire Assembly

		735089006	10x16.5 Premium-Liner (64 OTW) RH Kit Galaxy Beefy Baby II Reference Loader Stop matrix. 1 tire assembly	90 LB		$470.00
		735110006	10x16.5 Premium-Liner (64 OTW) LH Kit Galaxy Beefy Baby II Reference Loader Stop matrix. 1 tire assembly	90 LB		$470.00
		735096006	12x16.5 Premium-Liner (70 OTW) RH Kit Galaxy Beefy Baby II Reference Loader Stop matrix. 1 tire assembly	152 LB		$680.00
		735116006	12x16.5 Premium-Liner (70 OTW) LH Kit Galaxy Beefy Baby II Reference Loader Stop matrix. 1 tire assembly	152 LB		$680.00

Non-Pneumatic Tire Assembly

		735091006	10x16.5 Non-Pneumatic (64 OTW) RH Kit Solid Flex Reference Loader Stop matrix. 1 tire assembly	251 LB		$1,098.00
		735112006	10x16.5 Non-Pneumatic (64 OTW) LH Kit Solid Flex Reference Loader Stop matrix. 1 tire assembly	251 LB		$1,098.00

SR210 T4 FINAL SKID STEER LOADER
US PRICE LIST

(Ex Works Wichita, KS)

		735119006	12x16.5 Non-Pneumatic (70 OTW) RH Kit Solid Flex Reference Loader Stop matrix. 1 tire assembly	301 LB		$1,274.00
		735099006	12x16.5 Non-Pneumatic (70 OTW) LH Kit Solid Flex Reference Loader Stop matrix. 1 tire assembly	301 LB		$1,274.00

Severe Duty Tire Assembly

		735090006	10x16.5 Severe Duty (64 OTW) RH Kit Galaxy Hulk Reference Loader Stop matrix. 1 tire assembly	147 LB		$524.00
		735111006	10x16.5 Severe Duty (64 OTW) LH Kit Galaxy Hulk Reference Loader Stop matrix. 1 tire assembly	147 LB		$524.00
		735097006	12x16.5 Severe Duty (70 OTW) RH Kit Galaxy Hulk Reference Loader Stop matrix. 1 tire assembly	168 LB		$691.00
		735117006	12x16.5 Severe Duty (70 OTW) LH Kit Galaxy Hulk Reference Loader Stop matrix. 1 tire assembly	168 LB		$691.00

Mining Tire Assembly

		735098006	12x16.5 Mining (70 OTW) RH Kit Galaxy King Kong Reference Loader Stop matrix. 1 tire assembly	439 LB		$656.00
		735118006	12x16.5 Mining (70 OTW) LH Kit Galaxy King Kong Reference Loader Stop matrix. 1 tire assembly	439 LB		$656.00

Flotation Tire Assembly

		735100006	33x15.5 Flotation (76 OTW) RH Kit Galaxy Hippo Reference Loader Stop matrix. 1 tire assembly	178 LB		$748.00
		735120006	33x15.5 Flotation (76 OTW) LH Kit Galaxy Hippo Reference Loader Stop matrix. 1 tire assembly	178 LB		$748.00

SR220 T4 INTERIM SKID STEER LOADER
US PRICE LIST

(Ex Works Wichita, KS)

Standard Equipment

ENGINE:
- FPT F5HFL413H water cooled diesel engine
- 207 CID (3.4 L) Turbo
- Tier 4 Interim Certified
- High Pressure Common Rail (HPCR) Fuel Injection
- Charged Air Cooler (CAC)
- Diesel Particulate Filter (DPF)
- Horsepower:
  - Gross 82
  - Net 76
  - Peak torque 257 lb•ft (349 N•m)
- 120 amp alternator
- Air cleaner - dual element
- Anti-freeze solution to -34º F
- Fuel tank - 25.5 gal. (U.S.)
- 3-stack after cooler/radiator/ oil cooler configuration
- Glow Plugs
- Maintenance free 1000 CCA battery with master electrical disconnect

OPERATOR'S PROTECTIVE STRUCTURE:
- Enclosed Cab with Heater and AC
- Control lockout system
- Tilt forward ROPS/FOPS
- Electric parking brake control
- Hand throttle
- Foot throttle
- 2 Speed Low effort ergonomic H-Pattern hand controls
- Proportional auxiliary hydraulic control
- Operator's compartment floor cleanout
- Rear window with emergency escape
- Padded seat bar with integral arm rests
- Air Suspension Seat, with 2" retractable lap seat belt
- Foot rest
- Dome Light
- 12V Power plug socket
- Cup holder

OPERATOR'S PROTECTIVE STRUCTURE:
- Tool Pocket
- Top window
- Headliner
- Alarm package (backup and horn)

OTHER STANDARD FEATURES:
- Lights - 2 front, 2 side, 2 rear flood (halogen)
- Heavy Duty Front Lights
- Pre-wired for rotating beacon
- Service access hood, lockable
- Single point daily service
- Tail lights
- Remote oil drain
- Remote Oil and Fuel Filters
- Block Heater
- Debris Ingression Sealing

INSTRUMENTATION:
- Advanced Instrument Cluster with
  - Hour meter
  - Tachometer
  - Fuel guage
  - Hydraulic oil temperature guage
  - Engine coolant temperature guage
  - Diagnostic features
  - Security lock-out
- Warning lights with alarms:
  - Critical system stop
  - Engine system
  - Hydraulic system
  - Electrical and diagnostic system
- Warning alarms:
  - Battery voltage (plus display)
  - Diesel Particulate Filter (DPF)
  - Oil Service
- Indicator Light:
  - Engine preheat
  - Parking brake
  - Seat bar reminder

SR220 T4 INTERIM SKID STEER LOADER
US PRICE LIST

(Ex Works Wichita, KS)

Standard Equipment

DRIVE:
- Servo assist hydrostatic four wheel drive
- Spring applied hydraulic release (SAHR) disc parking brake
- Dynamic braking
- ASA #100 drive chain

HYDRAULICS:
- 6 micron oil filtration system
- 3 spool loader control valve
- Auxiliary hydraulics, Proportional thumb wheel activated: loader arm mounted with ISO specification flat face "connect-under-pressure" disconnects
  Including case drain
- Heavy duty hydraulic oil cooler
- Loader arm float position
- Auxiliary hydraulic function lockout override
- Loader arm circuit lockout override
- Self Level
- Ride Control

LOADER:
- Heavy Duty Hydraulic attachment coupler
- Radial arm geometry
- Loader lift arm support strut
- SAE operating load: 2200 lbs.
- Tipping load: 4400 lbs.

TIRES:
- 12 X 16.5 Heavy Duty - 70 inch
- Over-the-Tire Width (OTW)
- Galaxy XD2002

SR220 T4 INTERIM SKID STEER LOADER
US PRICE LIST

(Ex Works Wichita, KS)

Models

COMMERCIAL MODEL	Weight	Factory Data	List Price
SR220-T4 INTERIM	7,565 LB		$59,249.00

SR220 T4 INTERIM SKID STEER LOADER
US PRICE LIST

(Ex Works Wichita, KS)

Factory Supplied Options

Order Code	Description	Weight	Factory Data	List Price

CONTROLS AND TRANSMISSION

SD_01401 DRIVE CONTROL TYPE

		761040	Hand Controls (H-Pattern)			No Charge
		761042	E-H Controls			No Charge

SD_01100 CONTROLS LEVEL

		761028	1 Speed Mechanical Controls			($1,400.00)
		761029	2 Speed Mechanical Controls			No Charge
		761031	2 Speed E-H Controls **Electro-Hydraulic Switchable (ISO-H Pattern) Controls with Two Speed**			$2,245.00

ROPS/CAB

SD_05009 CAB

		761043	Open Cab (No Heat or HVAC) **with top window and keyed start**			($5,700.00)
		761046	Enclosed Cab with Heater **Includes side windows, front glass door with wiper, shoulder belt, radio with speakers and keyless start**			($1,500.00)
		761045	Enclosed Cab with Heater & AC **Includes side windows, front glass door with wiper, shoulder belt, radio with speakers and keyless start**			No Charge
		761184	Enclosed Cab w/Heat -Demo Door **Includes side windows, 1/2" polycarbonate front door with wiper, shoulder belt, radio with speakers and keyless start**			$314.00
		761183	Enclosed Cab w/HVAC -Demo Door **Includes side windows, 1/2" polycarbonate front door with wiper, shoulder belt, radio with speakers and keyless start**			$1,908.00

SD_05016 OPEN CAB TRIM

		X05016X	No Open Cab Interior Trim Pkg			No Charge
		761186	Open Cab Interior Trim Package **For use with Open Cab. Covers interior sides and rear.**			$330.00

SD_05185 CAB SEAT

		761050	Non Suspension Seat			($974.00)
		761052	Suspension Seat (Vinyl)			($624.00)

SR220 T4 INTERIM SKID STEER LOADER
US PRICE LIST

(Ex Works Wichita, KS)

		761062	Air Ride Suspension Seat **(Fabric) with temperature control (may not be ordered with Open Cab option 761043)**			No Charge

SD_K6480 HEAVY DUTY FRONT LIGHTS

		XK6480X	No Heavy Duty Front Lights			($100.00)
		761201	Heavy Duty Front Lights			No Charge

REAR DOOR

SD_39021 REAR DOOR

		761075	Rear Door			No Charge
		761205	Heavy Duty Rear Door			$471.00

COUPLER

SD_K5101 COUPLERS

		726003	Manual Coupler			($1,100.00)
		761206	Heavy Duty Hydraulic Coupler			No Charge

BLOCK HEATER

SD_02086 BLOCK HEATER

		X02086X	No Block Heater			($125.00)
		761048	Block Heater (120V)			No Charge

OPERATOR MANUALS

SD_32035 LANGUAGE OPTIONS

		761085	English USA			No Charge
		761088	French Canadian			No Charge
		761097	Spanish Latin American			No Charge

OPTIONAL PACKAGES

SD_01201 OPTION PACKAGES

		761032	Standard Equipment Only			($950.00)
		761034	Front Electric/Multi-Function **Contains Front Electric (Multi-Function) for Standard Auxiliaries**			($587.00)
		761033	Performance Package **Contains ON/OFF One-Way Self Leveling and Ride Control**			No Charge

SR220 T4 INTERIM SKID STEER LOADER
US PRICE LIST

(Ex Works Wichita, KS)

		761035	Performance w/Front Electric **Contains ON/OFF One-Way Self Leveling, Ride Control and Front Electric**			$669.00
		761036	High Flow Package **Contains High Flow Hydraulics with Front Electric**			$1,421.00
		761037	High Flow Plus Package **Contains Front Electric, High Flow Hydraulics, ON/OFF One-way Self Leveling and Ride Control**			$2,678.00

TIRES

SD_16068 TIRE OPTIONS

		8503107	12x16.5 Heavy Duty (70 OTW) **10PR Stamped Center - Galaxy XD2002**			No Charge
		8503207	12x16.5 Premium (70 OTW) **10PR Welded Plate Center - Galaxy Beefy Baby II**			$221.00
		8503307	12x16.5 Premium-Liner (70 OTW) **10PR Welded Plate Center - Galaxy Beefy Baby II**			$391.00
		8503407	12x16.5 Severe Duty (70 OTW) **12PR Welded Plate Center - Galaxy Hulk**			$536.00
		8503507	12x16.5 Mining (70 OTW) **12PR Welded Plate Center - Galaxy King Kong**			$639.00
		8503607	12x16.5 Non-Pneumatic (70 OTW) **Welded Plate Center - Solid Flex**			$3,152.00
		8505007	33X15.5 Flotation (76 OTW) **12PR Welded Plate Center - Galaxy Hippo**			$371.00
		8505107	14x17.5 Premium (76 OTW) **may not be used for over-the-wheel tracks** **10PR Welded Plate Center - Galaxy Beefy Baby II**			$536.00

FRONT ATTACHMENTS

BUCKETS

SD_K5231 BUCKETS

		XK5231X	No Bucket			No Charge
Dirt & Foundry Bucket						
		761125	72" Dirt & Foundry Bucket **(1829 mm), 16.7 cu. ft. Heaped Capacity**			$1,071.00
		761126	78" Dirt & Foundry Bucket **(1981 mm), 18.4 cu. ft. Heaped Capacity**			$1,112.00
Heavy Duty Dirt Bucket						
		761142	72" Heavy Duty Dirt Bucket **(1829 mm), 14.6 cu. ft. Heaped Capacity**			$1,329.00
		761143	78" Heavy Duty Dirt Bucket **(1981 mm), 15.9 cu. ft. Heaped Capacity**			$1,442.00

SR220 T4 INTERIM SKID STEER LOADER
US PRICE LIST

(Ex Works Wichita, KS)

		761144	84" Heavy Duty Dirt Bucket **(2134 mm), 19.4 cu. ft. Heaped Capacity**			$1,550.00
Light Material Bucket						
		761136	72" Light Material Bucket **(1829 mm), 23.7 cu. ft. Heaped Capacity**			$901.00
		761137	84" Light Material Bucket **(2134 mm), 27.9 cu. ft. Heaped Capacity**			$1,051.00
Low Profile Buckets						
		761129	72" Low Profile Bucket **(1829 mm), 14.5 cu. ft. Heaped Capacity**			$968.00
Low Profile Extended Bucket						
		761132	72" Low Profile Extended **(1829 mm), 17.1 cu. ft. Heaped Capacity**			$1,076.00
		761133	78" Low Profile Extended **(1981 mm), 18.6 cu. ft. Heaped Capacity**			$1,164.00
		761134	84" Low Profile Extended **(2134 mm), 20.2 cu. ft. Heaped Capacity**			$1,257.00
Manure & Slurry Bucket						
		761139	72" Manure-Slurry Bucket **(1829 mm), 19.1 cu. ft. Heaped Capacity**			$917.00
		761140	84" Manure-Slurry Bucket **(2134 mm), 22.5 cu. ft. Heaped Capacity**			$1,066.00

SPILL GUARDS

SD_K5400 SPILL GUARDS

		XK5400X	No Spill Guard			No Charge
		761177	72" Spill Guard **For use with Heavy Duty Buckets only**			$216.00
		761178	78" Spill Guard **For use with Heavy Duty Buckets only**			$237.00
		761179	84" Spill Guard **For use with Heavy Duty Buckets only**			$252.00

BOLT ON CUTTING EDGES

SD_K6399 BOLT ON CUTTING EDGE

		XK6399X	No Bolt on Cutting Edge			No Charge
		761147	72" Bolt on Cutting Edge			$258.00
		761148	78" Bolt on Cutting Edge			$278.00
		761149	84" Bolt on Cutting Edge			$299.00

MOVE TO BIC

SD_K6440 OFF-SITE SERVICE

		XK6440X	No Offsite Service Arrangement			No Charge

SR220 T4 INTERIM SKID STEER LOADER
US PRICE LIST

(Ex Works Wichita, KS)

		761175	Offsite Service Arrangement			No Charge

SPECIAL PAINT

SD_50103 SPECIAL PAINT

		X50103X	No Special Paint			No Charge
		726029	Special Paint **The price listed is for a color change only from the standard factory color: CNH #86609760 (MS42-Tan). All Special Color formulations will be applied using approved factory processes and materials. Metallic or other special formulations and/or materials are not available. A color chip must be provided to CNH for non CNH colors. A minimum lead time of 8 business weeks will be required prior to production. Unless specified, regular production decals will be applied. Requests can be made that decals not be applied. However, SAFETY decals MUST BE APPLIED in all cases. The following components remain CNH grey: lift & bucket cylinders, front coupler and attachments, ROPS, side screens, rear hood, upper chassis and control links.**			$3,213.00

TELEMATICS

SD_K6450 TELEMATICS

		XK6450X	No Telematics			No Charge
		761187	CASE SiteWatch Telematics			$874.00

SR220 T4 INTERIM SKID STEER LOADER
US PRICE LIST

(Ex Works Wichita, KS)

Factory Supplied Attachments

Order Code			Description	Weight	Factory Data	List Price
Basic Attachments						
		735030006	Demo Rear Door Insert	32 LB		$330.00
		735006006	Beacon Kit	1 LB		$165.00
		735007006	4-Corner LED Strobe Kit Must order connector. Reference dependency matrix.	24 LB		$536.00
		735159026	Heater Complete For use with Tier 3 Must order applicable harness. Reference dependency matrix.	137 LB		$1,472.00
		735159046	Heater Complete For use with Tier 4 Must order applicable harness. Reference dependency matrix.	141 LB		$1,472.00
		735158056	HVAC Complete For use with Tier 3 Must order applicable harness. Reference dependency matrix.	379 LB		$3,162.00
		735158146	HVAC Complete For use with Tier 4 Must order applicable harness. Reference dependency matrix.	384 LB		$3,162.00
		735146006	Three Point Seat Belt	4 LB		$250.00
		735011006	Glass Front Door Kit Center mounted wiper Requires three point seat belt. Must order applicable harness. Reference dependency matrix.	182 LB		$1,653.00
		735012006	Demo Front Door Kit Center mounted wiper Requires three point seat belt. Must order applicable harness. Reference dependency matrix.	182 LB		$2,905.00
		735013006	Cab Side Windows Kit	139 LB		$927.00
		735016006	Radio Kit Must order applicable harness. Reference dependency matrix.	16 LB		$443.00
		735150006	Open Cab Interior Trim Kit For use with Open Cab. Covers interior sides and rear.	20 LB		$399.00
		735020016	Road Light Kit Must order applicable harness. Reference dependency matrix.	111 LB		$649.00
		735124006	Side Lamp Kit	6 LB		$272.00
		735021006	Multi-Function Front Electrical Mech Kit For use with SR175 and SR200/SR210 Must order applicable handle. Reference dependency matrix.	11 LB		$294.00
		735125006	Multi-Function Front Electrical E-H Kit For use with SR175 and SR200/SR210 Must order applicable handle. Reference dependency matrix.	11 LB		$294.00
		735022026	One Way Self Level Kit	14 LB		$520.00
		735023006	Ride Control Kit Must order applicable handle. Reference dependency martix.	33 LB		$515.00
		735024006	Hydraulic Coupler Kit For use with SR175 and SR220/SR210 Must order applicable harness. Reference dependency matrix.	160 LB		$1,324.00
		735025056	High Flow Auxiliary Kit For use with TIER 4 models ONLY. Must order applicable harness. Reference dependency matrix.	192 LB		$2,699.00

SR220 T4 INTERIM SKID STEER LOADER
US PRICE LIST

(Ex Works Wichita, KS)

		735025036	High Flow Auxiliary Kit For use with TIER 3 models ONLY. Must order applicable harness. Reference dependency matrix.	190 LB		$2,699.00
		735027036	Second Hydraulic Front Auxiliary Kit Must order applicable handle. Reference dependency matrix.	84 LB		$1,103.00
		735036026	4-Point Lift Hook Kit	10 LB		$238.00
		735037006	Single Point Lift Hook Kit	289 LB		$1,102.00
		735038006	FOPS Level 2 Modification Kit	61 LB		$368.00
		735039026	Extra Counterweight Kit	362 LB		$736.00
		735040056	Aspirator Kit For use with TIER 3 models ONLY.	9 LB		$340.00
		735040076	Aspirator Kit For use with TIER 4 models ONLY.	16 LB		$340.00
		735042006	Interior Mirror Kit	4 LB		$62.00
		735045006	Foot Control Conversion Kit Not available for units equipped with Electro Hydraulic (EH) controls. For use with Tier 3	54 LB		$659.00
		735045046	Foot Control Conversion Kit Not available for units equipped with Electro Hydraulic (EH) controls. For use with Tier 4	52 LB		$659.00
		735046056	Hand Control Conversion Kit For use with units built PRIOR to S/N NDM461595 (SR220), NDM443253 (SR250), NDM469210 (SV250) and NDM460105 (SV300)	77 LB		$883.00
		735046066	Hand Control Conversion Kit For use with units built AFTER S/N NDM461595 (SR220), NDM443253 (SR250), NDM469210 (SV250) and NDM460105 (SV300)	76 LB		$883.00
		735047006	120V Block Heater Kit	6 LB		$221.00
		735142006	Cylinder Guard Kit	21 LB		$792.00
		735151046	Debris Seal Kit Reduces debris ingression to engine compartment and chassis For use with models built July 2012 or later	23 LB		$253.00
		735152036	New Hood with Debris Seal Kit Contains new hood and additional sealing items Reduces debris ingression to engine compartment and chassis For use with Tier 3 models built prior to July 2012	124 LB		$749.00
		735161006	Heavy Duty Front Lights - Radial Model For use with Radial Models	26 LB		$429.00
		735163006	Heavy Duty Rear Door	140 LB		$769.00

Handles - E-H Models

		735126006	LH EH Handle Kit (NO 2nd Aux) Adds Front Electric on all models except SR130 and SR160	2 LB		$191.00
		735127006	RH EH Handle Kit Adds Front Electric on all models except SR130 and SR160	2 LB		$191.00
		735132006	LH EH Handle Kit (WITH 2nd Aux) Adds Second Auxiliary with Front Electric.	2 LB		$191.00

SR220 T4 INTERIM SKID STEER LOADER
US PRICE LIST

(Ex Works Wichita, KS)

Handles - Mechanical Models

		735134006	LH Mechanical Handle Kit (NO 2nd Aux) Adds Front Electric.	2 LB		$191.00
		735135006	LH Mechanical Handle Kit (WITH 2nd Aux) Adds Second Auxiliary with Front Electric.	2 LB		$191.00
		735136006	RH Mechanical Handle Kit Adds Front Electric.	2 LB		$191.00

Pallet Forks

		735075006	Pallet Fork Frame w/48" Tines	540 LB		$1,355.00

Dirt & Foundry Bucket

		735055016	72" Dirt & Foundry Bucket (1829 mm), 16.7 cu. ft. Heaped Capacity	407 LB		$1,071.00
		735056016	78" Dirt & Foundry Bucket (1981 mm), 18.4 cu. ft. Heaped Capacity	429 LB		$1,112.00

Low Profile Bucket

		735059016	72" Low Profile Bucket (1829 mm), 14.5 cu. ft. Heaped Capacity	471 LB		$968.00

Low Profile Extended Bucket

		735062016	72" Low Profile Extended Bucket (1829 mm), 17.1 cu. ft. Heaped Capacity	504 LB		$1,076.00
		735063016	78" Low Profile Extended Bucket (1981 mm), 18.6 cu. ft. Heaped Capacity	531 LB		$1,164.00
		735064016	84" Low Profile Extended Bucket (2134 mm), 20.2 cu. ft. Heaped Capacity	607 LB		$1,257.00

Light Material Bucket

		735066016	72" Light Material Bucket (1829 mm), 23.7 cu. ft. Heaped Capacity	466 LB		$901.00
		735067016	84" Light Material Bucket (2134 mm), 27.9 cu. ft. Heaped Capacity	532 LB		$1,051.00

Manure & Slurry Bucket

		735069016	72" Manure-Slurry Bucket (1829 mm), 19.1 cu. ft. Heaped Capacity	469 LB		$917.00
		735070016	84" Manure-Slurry Bucket (2134 mm), 22.5 cu. ft. Heaped Capacity	535 LB		$1,066.00

Heavy Duty Dirt Bucket

		735072016	72" Heavy Duty Dirt Bucket (1829 mm), 14.6 cu. ft. Heaped Capacity	501 LB		$1,329.00
		735073016	78" Heavy Duty Dirt Bucket (1981 mm), 15.9 cu. ft. Heaped Capacity	526 LB		$1,442.00
		735074016	84" Heavy Duty Dirt Bucket (2134 mm), 19.4 cu. ft. Heaped Capacity	550 LB		$1,550.00

SR220 T4 INTERIM SKID STEER LOADER
US PRICE LIST

(Ex Works Wichita, KS)

Heavy Duty Tire Assembly

		735094006	12x16.5 Heavy Duty (70 OTW) RH Kit Galaxy XD2002 Reference Loader Stop matrix. 1 tire assembly	141 LB		$447.00
		735114006	12x16.5 Heavy Duty (70 OTW) LH Kit Galaxy XD2002 Reference Loader Stop matrix. 1 tire assembly	141 LB		$447.00

Premium Tire Assembly

		735095006	12x16.5 Premium (70 OTW) RH Kit Galaxy Beefy Baby II Reference Loader Stop matrix. 1 tire assembly	152 LB		$546.00
		735115006	12x16.5 Premium (70 OTW) LH Kit Galaxy Beefy Baby II Reference Loader Stop matrix. 1 tire assembly	152 LB		$546.00
		735102006	14x17.5 Premium (76 OTW) RH Kit Galaxy Beefy Baby II Reference Loader Stop matrix. 1 tire assembly	89 LB		$745.00
		735121006	14x17.5 Premium (76 OTW) LH Kit Galaxy Beefy Baby II Reference Loader Stop matrix. 1 tire assembly	89 LB		$745.00

Premium-Liner Tire Assembly

		735096006	12x16.5 Premium-Liner (70 OTW) RH Kit Galaxy Beefy Baby II Reference Loader Stop matrix. 1 tire assembly	152 LB		$680.00
		735116006	12x16.5 Premium-Liner (70 OTW) LH Kit Galaxy Beefy Baby II Reference Loader Stop matrix. 1 tire assembly	152 LB		$680.00

Non-Pneumatic Tire Assembly

		735119006	12x16.5 Non-Pneumatic (70 OTW) RH Kit Solid Flex Reference Loader Stop matrix. 1 tire assembly	301 LB		$1,274.00
		735099006	12x16.5 Non-Pneumatic (70 OTW) LH Kit Solid Flex Reference Loader Stop matrix. 1 tire assembly	301 LB		$1,274.00

Severe Duty Tire Assembly

		735097006	12x16.5 Severe Duty (70 OTW) RH Kit Galaxy Hulk Reference Loader Stop matrix. 1 tire assembly	168 LB		$691.00
		735117006	12x16.5 Severe Duty (70 OTW) LH Kit Galaxy Hulk Reference Loader Stop matrix. 1 tire assembly	168 LB		$691.00

Mining Tire Assembly

		735098006	12x16.5 Mining (70 OTW) RH Kit Galaxy King Kong Reference Loader Stop matrix. 1 tire assembly	439 LB		$656.00
		735118006	12x16.5 Mining (70 OTW) LH Kit Galaxy King Kong Reference Loader Stop matrix. 1 tire assembly	439 LB		$656.00

SR220 T4 INTERIM SKID STEER LOADER
US PRICE LIST

(Ex Works Wichita, KS)

Flotation Tire Assembly

		735100006	33x15.5 Flotation (76 OTW) RH Kit Galaxy Hippo Reference Loader Stop matrix. 1 tire assembly	178 LB		$748.00
		735120006	33x15.5 Flotation (76 OTW) LH Kit Galaxy Hippo Reference Loader Stop matrix. 1 tire assembly	178 LB		$748.00

SR240 T4 FINAL SKID STEER LOADER
US PRICE LIST

(Ex Works Wichita, KS)

Standard Equipment

ENGINE:
- FPT F5H FL463H water cooled diesel engine
- 207 CID (3.4 L) Turbo
- Tier 4 Final Certified
- Particulate Matter Catalyst
- High Pressure Common Rail (HPCR) Fuel Injection
- Charged Air Cooler (CAC)
- Horsepower:
  - Gross 74
  - Net 68
  - Peak torque 232 lb•ft (314 N•m)
- 120 amp alternator
- Air cleaner - dual element
- Organic Acid Technology (OAT) Anti-freeze solution to -34º F
- Fuel tank - 25.5 gal. (U.S.)
- 3-stack after cooler/radiator/ oil cooler configuration
- Maintenance-Free Belt
- Glow Plugs
- Maintenance free 1000 CCA battery with master electrical disconnect

OPERATOR'S PROTECTIVE STRUCTURE:
- Enclosed Cab with heater and AC
- Control lockout system
- Tilt forward ROPS/FOPS
- Electric parking brake control
- Hand throttle
- Foot throttle
- Low effort ergonomic H-Pattern hand controls
- Proportional auxiliary hydraulic control
- Operator's compartment floor cleanout
- Rear window with emergency escape
- Padded seat bar with integral arm rests
- Air Ride Suspension Seat with 2" retractable lap seat belt
- Foot rest
- Dome Light
- 12V Power plug socket

OPERATOR'S PROTECTIVE STRUCTURE:
- Cup holder
- Tool Pocket
- Top window
- Headliner
- Alarm package (backup and horn)

OTHER STANDARD FEATURES:
- Lights - 2 front, 2 side, 2 rear flood (halogen)
- Heavy Duty Front Lights
- Pre-wired for rotating beacon
- Service access hood, lockable
- Single point daily service
- Tail lights
- Remote oil drain
- Remote Oil and Fuel Filters
- Block Heater
- Debris Ingression Prevention Sealing

INSTRUMENTATION:
- Advanced Instrument Cluster with
  - Hour meter
  - Tachometer
  - Fuel guage
  - Hydraulic oil temperature guage
  - Engine coolant temperature guage
  - Diagnostic features
  - Security lock-out
- Warning lights with alarms:
  - Critical system stop
  - Engine system
  - Hydraulic system
  - Electrical and diagnostic system
- Warning alarms:
  - Battery voltage (plus display)
  - Diesel Particulate Filter (DPF)
  - Oil Service
- Indicator Light:
  - Engine preheat
  - Parking brake
  - Seat bar reminder

SR240 T4 FINAL SKID STEER LOADER
US PRICE LIST

(Ex Works Wichita, KS)

Standard Equipment

DRIVE:
- Servo assist, two-speed hydrostatic four wheel drive
- Spring applied hydraulic release (SAHR) disc parking brake
- Dynamic braking
- ASA #100 drive chain

HYDRAULICS:
- 6 micron oil filtration system
- 3 spool loader control valve
- Auxiliary hydraulics, Proportional thumb wheel activated: loader arm mounted with ISO specification flat face "connect-under-pressure" disconnects
  Including case drain
- Heavy duty hydraulic oil cooler
- Loader arm float position
- Auxiliary hydraulic function lockout override
- Loader arm circuit lockout override
- Self Level
- Ride Control

LOADER:
- Heavy Duty Hydraulic attachment coupler
- Radial arm geometry
- Loader lift arm support strut
- SAE operating load: 2400 lbs.
- Tipping load: 4800 lbs.

TIRES:
- 12 X 16.5 Heavy Duty - 70 inch
- Over-the-Tire Width (OTW)
- Galaxy XD2002

SR240 T4 FINAL SKID STEER LOADER
US PRICE LIST

(Ex Works Wichita, KS)

Models

COMMERCIAL MODEL	Weight	Factory Data	List Price
SR240 T4 FINAL	7,400 LB		$59,726.00

SR240 T4 FINAL SKID STEER LOADER
US PRICE LIST

(Ex Works Wichita, KS)

Factory Supplied Options

Order Code	Description	Weight	Factory Data	List Price

CONTROLS AND TRANSMISSION

SD_01100 CONTROLS LEVEL

		761028	1 Speed Mechanical Controls			($1,400.00)
		761029	2 Speed Mechanical Controls			No Charge
		761031	2 Speed E-H Controls **Electro-Hydraulic Switchable (ISO-H Pattern) Controls with Two Speed**			$2,245.00

SD_01401 DRIVE CONTROL TYPE

		761040	Hand Controls (H-Pattern)			No Charge
		761042	E-H Controls			No Charge

ROPS/CAB

SD_05009 CAB

		761043	Open Cab (No Heat or HVAC) **with top window and keyed start**			($5,700.00)
		761046	Enclosed Cab with Heater **Includes side windows, front glass door with wiper, shoulder belt, radio with speakers and keyless start**			($1,500.00)
		761045	Enclosed Cab with Heater & AC **Includes side windows, front glass door with wiper, shoulder belt, radio with speakers and keyless start**			No Charge
		761184	Enclosed Cab w/Heat -Demo Door **Includes side windows, 1/2" polycarbonate front door with wiper, shoulder belt, radio with speakers and keyless start**			$314.00
		761183	Enclosed Cab w/HVAC -Demo Door **Includes side windows, 1/2" polycarbonate front door with wiper, shoulder belt, radio with speakers and keyless start**			$1,908.00

SD_05016 OPEN CAB TRIM

		X05016X	No Open Cab Interior Trim Pkg			No Charge
		761186	Open Cab Interior Trim Package **For use wtih Open Cab. Covers interior sides and rear.**			$330.00

SD_05185 CAB SEAT

		761050	Non Suspension Seat			($974.00)
		761052	Suspension Seat (Vinyl)			($624.00)

SR240 T4 FINAL SKID STEER LOADER
US PRICE LIST

(Ex Works Wichita, KS)

		761062	Air Ride Suspension Seat **(Fabric) with temperature control** **(may not be ordered with Open Cab option 761043)**			No Charge

SD_K6480 HEAVY DUTY FRONT LIGHTS

		XK6480X	No Heavy Duty Front Lights			($100.00)
		761201	Heavy Duty Front Lights			No Charge

REAR DOOR

SD_39021 REAR DOOR

		761075	Rear Door			No Charge
		761205	Heavy Duty Rear Door			$471.00

COUPLER

SD_K5101 COUPLERS

		726003	Manual Coupler			($1,100.00)
		761206	Heavy Duty Hydraulic Coupler			No Charge

BLOCK HEATER

SD_02086 BLOCK HEATER

		X02086X	No Block Heater			($125.00)
		761048	Block Heater (120V)			No Charge

OPERATOR MANUALS

SD_32035 LANGUAGE OPTIONS

		761085	English USA			No Charge
		761088	French Canadian			No Charge
		761097	Spanish Latin American			No Charge

OPTIONAL PACKAGES

SD_01201 OPTION PACKAGES

		761032	Standard Equipment Only			($950.00)
		761034	Front Electric/Multi-Function **Contains Front Electric (Multi-Function) for Standard Auxiliaries**			($587.00)
		761033	Performance Package **Contains ON/OFF One-Way Self Leveling and Ride Control**			No Charge

SR240 T4 FINAL SKID STEER LOADER
US PRICE LIST

(Ex Works Wichita, KS)

		761035	Performance w/Front Electric **Contains ON/OFF One-Way Self Leveling, Ride Control and Front Electric**			$669.00
		761036	High Flow Package **Contains High Flow Hydraulics with Front Electric**			$1,421.00
		761037	High Flow Plus Package **Contains Front Electric, High Flow Hydraulics, ON/OFF One-Way Self Leveling and Ride Control**			$2,678.00

TIRES

SD_16068 TIRE OPTIONS

		8503107	12x16.5 Heavy Duty (70 OTW) **10PR Stamped Center - Galaxy XD2002**			No Charge
		8503207	12x16.5 Premium (70 OTW) **10PR Stamped Center - Galaxy Beefy Baby II**			$221.00
		8503307	12x16.5 Premium-Liner (70 OTW) **10PR Stamped Center - Galaxy Beefy Baby II**			$391.00
		8503407	12x16.5 Severe Duty (70 OTW) **12PR Welded Plate Center - Galaxy Hulk**			$536.00
		8503507	12x16.5 Mining (70 OTW) **12PR Welded Plate Center - Galaxy King Kong**			$639.00
		8503607	12x16.5 Non-Pneumatic (70 OTW) **Welded Plate Center - Solid Flex**			$3,152.00
		8505007	33X15.5 Flotation (76 OTW) **12PR Welded Plate Center - Galaxy Hippo**			$371.00
		8505107	14x17.5 Premium (76 OTW) **may not be used for over-the-wheel tracks** **10PR Welded Plate Center - Galaxy Beefy Baby II**			$536.00

FRONT ATTACHMENTS

BUCKETS

SD_K5231 BUCKETS

		XK5231X	No Bucket			No Charge
Dirt & Foundry Bucket						
		761125	72" Dirt & Foundry Bucket **(1829 mm), 16.7 cu. ft. Heaped Capacity**			$1,071.00
		761126	78" Dirt & Foundry Bucket **(1981 mm), 18.4 cu. ft. Heaped Capacity**			$1,112.00
Heavy Duty Dirt Bucket						
		761142	72" Heavy Duty Dirt Bucket **(1829 mm), 14.6 cu. ft. Heaped Capacity**			$1,329.00
		761143	78" Heavy Duty Dirt Bucket **(1981 mm), 15.9 cu. ft. Heaped Capacity**			$1,442.00

SR240 T4 FINAL SKID STEER LOADER
US PRICE LIST

(Ex Works Wichita, KS)

		761144	84" Heavy Duty Dirt Bucket **(2134 mm), 19.4 cu. ft. Heaped Capacity**			$1,550.00
Light Material Bucket						
		761136	72" Light Material Bucket **(1829 mm), 14.5 cu. ft. Heaped Capacity**			$901.00
		761137	84" Light Material Bucket **(2134 mm), 27.9 cu. ft. Heaped Capacity**			$1,051.00
Low Profile Bucket						
		761129	72" Low Profile Bucket **(1829 mm), 14.5 cu. ft. Heaped Capacity**			$968.00
Low Profile Extended Bucket						
		761132	72" Low Profile Extended **(1829 mm), 17.1 cu. ft. Heaped Capacity**			$1,076.00
		761133	78" Low Profile Extended **(1981 mm), 18.6 cu. ft. Heaped Capacity**			$1,164.00
		761134	84" Low Profile Extended **(2134 mm), 20.2 cu. ft. Heaped Capacity**			$1,257.00
Manure & Slurry Bucket						
		761139	72" Manure-Slurry Bucket **(1829 mm), 19.1 cu. ft. Heaped Capacity**			$917.00
		761140	84" Manure-Slurry Bucket **(2134 mm), 22.5 cu. ft. Heaped Capacity**			$1,066.00

SPILL GUARDS

SD_K5400 SPILL GUARDS

		XK5400X	No Spill Guard			No Charge
		761177	72" Spill Guard **For use with Heavy Duty Buckets only**			$216.00
		761178	78" Spill Guard **For use with Heavy Duty Buckets only**			$237.00
		761179	84" Spill Guard **For use with Heavy Duty Buckets only**			$252.00

BOLT ON CUTTING EDGES

SD_K6399 BOLT ON CUTTING EDGE

		XK6399X	No Bolt on Cutting Edge			No Charge
		761147	72" Bolt on Cutting Edge			$258.00
		761148	78" Bolt on Cutting Edge			$278.00
		761149	84" Bolt on Cutting Edge			$299.00

MOVE TO BIC

SD_K6440 OFF-SITE SERVICE

		XK6440X	No Offsite Service Arrangement			No Charge

SR240 T4 FINAL SKID STEER LOADER
US PRICE LIST

(Ex Works Wichita, KS)

		761175	Offsite Service Arrangement			No Charge

SPECIAL PAINT

SD_50103 SPECIAL PAINT

		X50103X	No Special Paint			No Charge
		726029	Special Paint **The price listed is for a color change only from the standard factory color: CNH #86609760 (MS42-Tan). All Special Color formulations will be applied using approved factory processes and materials. Metallic or other special formulations and/or materials are not available. A color chip must be provided to CNH for non CNH colors. A minimum lead time of 8 business weeks will be required prior to production. Unless specified, regular production decals will be applied. Requests can be made that decals not be applied. However, SAFETY decals MUST BE APPLIED in all cases. The following components remain CNH grey: lift & bucket cylinders, front coupler and attachments, ROPS, side screens, rear hood, upper chassis and control links.**			$3,213.00

TELEMATICS

SD_K6450 TELEMATICS

		XK6450X	No Telematics			No Charge
		761187	CASE SiteWatch Telematics			$874.00

SR240 T4 FINAL SKID STEER LOADER
US PRICE LIST

(Ex Works Wichita, KS)

Factory Supplied Attachments

Order Code			Description	Weight	Factory Data	List Price
Basic Attachments						
		735030006	Demo Rear Door Insert	32 LB		$330.00
		735006006	Beacon Kit	1 LB		$165.00
		735007006	4-Corner LED Strobe Kit Must order connector. Reference dependency matrix.	24 LB		$536.00
		735159026	Heater Complete For use with Tier 3 Must order applicable harness. Reference dependency matrix.	137 LB		$1,472.00
		735159046	Heater Complete For use with SR220 Tier 4 Interim, SR240 Tier 4 Final, SR250 Tier 4 Interim, SV250 Tier 4 Interim, SV280 Tier 4 Final and SV300 Tier 4 Inteirm Must order applicable harness. Reference dependency matrix.	141 LB		$1,472.00
		735158056	HVAC Complete For use with SR220 Tier 3 and SR250 Tier 3 Must order applicable harness. Reference dependency matrix.	379 LB		$3,162.00
		735158146	HVAC Complete For use with SR220 Tier 4 Interim and SR250 Tier 4 Interim Must order applicable harness. Reference dependency matrix.	384 LB		$3,162.00
		735158176	HVAC Complete For use with SR240 Tier 4 Final Must order applicable harness. Reference dependency matrix.	381 LB		$3,162.00
		735146006	Three Point Seat Belt	4 LB		$250.00
		735011006	Glass Front Door Kit Center mounted wiper Requires three point seat belt. Must order applicable harness. Reference dependency matrix.	182 LB		$1,653.00
		735012006	Demo Front Door Kit Center mounted wiper Requires three point seat belt. Must order applicable harness. Reference dependency matrix.	182 LB		$2,905.00
		735013006	Cab Side Windows Kit	139 LB		$927.00
		735016006	Radio Kit Must order applicable harness. Reference dependency matrix.	16 LB		$443.00
		735150006	Open Cab Interior Trim Kit For use with Open Cab. Covers interior sides and rear.	20 LB		$399.00
		735020016	Road Light Kit For use with SR220 Tier 3 and Tier 4 Interim, SR240 Tier 4 Final and SR250 T4 Interim Must order applicable harness. Reference dependency matrix.	111 LB		$649.00
		735124006	Side Lamp Kit	6 LB		$272.00
		735021006	Multi-Function Front Electrical Mech Kit For use with SR220 Tier 3 and Tier 4 Interim, SR240 Tier 4 Final and SR250 Tier 3 and Tier 4 Interim Must order applicable handle. Reference dependency matrix.	11 LB		$294.00
		735125006	Multi-Function Front Electrical E-H Kit For use with SR220 Tier 3 and Tier 4 Interim, SR240 Tier 4 Final and SR250 Tier 3 and Tier 4 Interim	11 LB		$294.00
		735022026	One Way Self Level Kit	14 LB		$520.00

SR240 T4 FINAL SKID STEER LOADER
US PRICE LIST

(Ex Works Wichita, KS)

		735023006	Ride Control Kit Must order applicable handle. Reference dependency martix.	33 LB		$515.00
		735024006	Hydraulic Coupler Kit Must order applicable harness. Reference dependency matrix.	160 LB		$1,324.00
		735025036	High Flow Auxiliary Kit For use with SR220 Tier 3 and SR250 Tier 3 Must order applicable harness. Reference dependency matrix.	190 LB		$2,699.00
		735025056	High Flow Auxiliary Kit For use with SR220 Tier 4 Interim, SR240 Tier 4 Final and SR250 Tier 3 and Tier 4 Interim Must order applicable harness. Reference dependency matrix.	192 LB		$2,699.00
		735027036	Second Hydraulic Front Auxiliary Kit For use with SR220 Tier 3 and Tier 4 Interim, SR240 Tier 4 Final and SR250 Tier 3 and Tier 4 Interim Must order applicable handle. Reference dependency matrix.	84 LB		$1,103.00
		735036026	4-Point Lift Hook Kit For use with SR220 Tier 3 and Tier 4 Interim, SR240 T4 Final, SR250 Tier 3 and Tier 4 Interim, SV250 Tier 3 and Tier 4 Interim, SV280 Tier 4 Final and SV300 Tier 4 Interim	10 LB		$238.00
		735037006	Single Point Lift Hook Kit	289 LB		$1,102.00
		735038006	FOPS Level 2 Modification Kit	61 LB		$368.00
		735039026	Extra Counterweight Kit	362 LB		$736.00
		735040056	Aspirator Kit For use with SR220 Tier 3 and SR250 Tier 3	9 LB		$340.00
		735040076	Aspirator Kit For use with SR220 Tier 4 Interim and SR250 Tier 4 Interim	16 LB		$340.00
		735040156	Aspirator Kit For use with SR240 Tier 4 Final	17 LB		$340.00
		735042006	Interior Mirror Kit	4 LB		$62.00
		735045006	Foot Control Conversion Kit For use with Tier 3	54 LB		$659.00
		735045046	Foot Control Conversion Kit Not available for units equipped with Electro Hydraulic (EH) controls.	52 LB		$659.00
		735046056	Hand Control Conversion Kit For use with units built PRIOR to S/N NDM461595 (SR220 Tier 4 Interim), NDM443253 (SR250 Tier 4 Interim), NDM469210 (SV250 Tier 4 Interim) and NDM460105 (SV300 Tier 4 Interim)	77 LB		$883.00
		735046066	Hand Control Conversion Kit For use with units built AFTER S/N NDM461595 (SR220 Tier 4 Interim and Final), NDM443253 (SR250 Tier 4 Interim and Final), NDM469210 (SV250 Tier 4 Interim and Final) and NDM460105 (SV300 Tier 4 Interim and Final)	76 LB		$883.00
		735047006	120V Block Heater Kit	6 LB		$221.00
		735048006	220V Block Heater Kit	6 LB		$221.00
		735142006	Cylinder Guard Kit	21 LB		$792.00
		735151046	Debris Seal Kit For use with SR220 Tier 3 and Tier 4 Interim, SR240 Tier 4 Final and SR250 Tier 3 and Tier 4 Interim Reduces debris ingression to engine compartmet and chassis	23 LB		$253.00
		735152036	New Hood with Debris Seal Kit For use with SR220 Tier 3 and SR250 Tier 3 Reduces debris ingression to engine compartment and chassis	124 LB		$749.00

SR240 T4 FINAL SKID STEER LOADER
US PRICE LIST

(Ex Works Wichita, KS)

		735161006	Heavy Duty Front Lights - Radial Model For use with SR220 T4 Interim, SR240 T4 Final and SR250 T4 Interim	26 LB		$429.00
		735163006	Heavy Duty Rear Door For use with SR220 T4 Interim, SR240 T4 Final, SR250 T4 Interim, SV250 T4 Interim, SV280 T4 Final and SV300 T4 Interim	140 LB		$769.00

Handles - E-H Models

		735126006	LH EH Handle Kit (NO 2nd Aux) Adds Front Electric.	2 LB		$191.00
		735127006	RH EH Handle Kit Adds Front Electric.	2 LB		$191.00
		735132006	LH EH Handle Kit (WITH 2nd Aux) Adds Second Auxiliary with Front Electric.	2 LB		$191.00

Handles - Mechanical Models

		735134006	LH Mechanical Handle Kit (NO 2nd Aux) Adds Front Electric.	2 LB		$191.00
		735135006	LH Mechanical Handle Kit (WITH 2nd Aux) Adds Second Auxiliary with Front Electric.	2 LB		$191.00
		735136006	RH Mechanical Handle Kit Adds Front Electric.	2 LB		$191.00

Pallet Fork

		735075006	Pallet Fork Frame w/48" Tines	540 LB		$1,355.00

Dirt & Foundry Bucket

		735055016	72" Dirt & Foundry Bucket (1829 mm), 16.7 cu. ft. Heaped Capacity	407 LB		$1,071.00
		735056016	78" Dirt & Foundry Bucket (1981 mm), 18.4 cu. ft. Heaped Capacity	429 LB		$1,112.00

Low Profile Bucket

		735059016	72" Low Profile Bucket (1829 mm), 14.5 cu. ft. Heaped Capacity	471 LB		$968.00

Low Profile Extended Bucket

		735062016	72" Low Profile Extended Bucket (1829 mm), 17.1 cu. ft. Heaped Capacity	504 LB		$1,076.00
		735063016	78" Low Profile Extended Bucket (1981 mm), 18.6 cu. ft. Heaped Capacity	531 LB		$1,164.00
		735064016	84" Low Profile Extended Bucket (2134 mm), 20.2 cu. ft. Heaped Capacity	607 LB		$1,257.00

Light Material Bucket

		735066016	72" Light Material Bucket (1829 mm), 23.7 cu. ft. Heaped Capacity	466 LB		$901.00
		735067016	84" Light Material Bucket (2134 mm), 27.9 cu. ft. Heaped Capacity	532 LB		$1,051.00

SR240 T4 FINAL SKID STEER LOADER
US PRICE LIST

(Ex Works Wichita, KS)

Manure & Slurry Bucket

		735069016	72" Manure-Slurry Bucket (1829 mm), 19.1 cu. ft. Heaped Capacity	469 LB		$917.00
		735070016	84" Manure-Slurry Bucket (2134 mm), 22.5 cu. ft. Heaped Capacity	535 LB		$1,066.00

Heavy Duty Dirt Bucket

		735072016	72" Heavy Duty Dirt Bucket (1829 mm), 14.6 cu. ft. Heaped Capacity	501 LB		$1,329.00
		735073016	78" Heavy Duty Dirt Bucket (1981 mm), 15.9 cu. ft. Heaped Capacity	526 LB		$1,442.00
		735074016	84" Heavy Duty Dirt Bucket (2134 mm), 19.4 cu. ft. Heaped Capacity	550 LB		$1,550.00

Heavy Duty Tire Assembly

		735094006	12x16.5 Heavy Duty (70 OTW) RH Kit Galaxy XD2002 Reference Loader Stop matrix. 1 tire assembly	141 LB		$447.00
		735114006	12x16.5 Heavy Duty (70 OTW) LH Kit Galaxy XD2002 Reference Loader Stop matrix. 1 tire assembly	141 LB		$447.00

Premium Tire Assembly

		735095006	12x16.5 Premium (70 OTW) RH Kit Galaxy Beefy Baby II Reference Loader Stop matrix. 1 tire assembly	152 LB		$546.00
		735115006	12x16.5 Premium (70 OTW) LH Kit Galaxy Beefy Baby II Reference Loader Stop matrix. 1 tire assembly	152 LB		$546.00
		735102006	14x17.5 Premium (76 OTW) RH Kit Galaxy Beefy Baby II Reference Loader Stop matrix. 1 tire assembly	89 LB		$745.00
		735121006	14x17.5 Premium (76 OTW) LH Kit Galaxy Beefy Baby II Reference Loader Stop matrix. 1 tire assembly	89 LB		$745.00

Non-Pneumatic Tire Assembly

		735119006	12x16.5 Non-Pneumatic (70 OTW) RH Kit Solid Flex Reference Loader Stop matrix. 1 tire assembly	301 LB		$1,274.00
		735099006	12x16.5 Non-Pneumatic (70 OTW) LH Kit Solid Flex Reference Loader Stop matrix. 1 tire assembly	301 LB		$1,274.00

Premium-Liner Tire Assembly

		735096006	12x16.5 Premium-Liner (70 OTW) RH Kit Galaxy Beefy Baby II Reference Loader Stop matrix. 1 tire assembly	152 LB		$680.00
		735116006	12x16.5 Premium-Liner (70 OTW) LH Kit Galaxy Beefy Baby II Reference Loader Stop matrix. 1 tire assembly	152 LB		$680.00

SR240 T4 FINAL SKID STEER LOADER
US PRICE LIST

(Ex Works Wichita, KS)

Severe Duty Tire Assembly

		735097006	12x16.5 Severe Duty (70 OTW) RH Kit Galaxy Hulk Reference Loader Stop matrix. 1 tire assembly	168 LB		$691.00
		735117006	12x16.5 Severe Duty (70 OTW) LH Kit Galaxy Hulk Reference Loader Stop matrix. 1 tire assembly	168 LB		$691.00

Mining Tire Assembly

		735098006	12x16.5 Mining (70 OTW) RH Kit Galaxy King Kong Reference Loader Stop matrix. 1 tire assembly	439 LB		$656.00
		735118006	12x16.5 Mining (70 OTW) LH Kit Galaxy King Kong Reference Loader Stop matrix. 1 tire assembly	439 LB		$656.00

Flotation Tire Assembly

		735100006	33x15.5 Flotation (76 OTW) RH Kit Galaxy Hippo Reference Loader Stop matrix. 1 tire assembly	178 LB		$748.00
		735120006	33x15.5 Flotation (76 OTW) LH Kit Galaxy Hippo Reference Loader Stop matrix. 1 tire assembly	178 LB		$748.00

SR250 T4 INTERIM SKID STEER LOADER
US PRICE LIST

(Ex Works Wichita, KS)

Standard Equipment

ENGINE:
- F5H FL413L water-cooled diesel engine
- 207 CID (3.4L) Turbo
- Tier 4 Interim Certified
- High Pressure Common Rail (HPCR) Fuel Injection
- Charged Air Cooler (CAC)
- Diesel Particulate Filter (DPF)
- Horsepower:
  - Gross 90
  - Net 84
  - Peak torque 282 lb•ft (383 N•m)
- 120 amp alternator
- Air cleaner - dual element
- Anti-freeze solution to -34° F
- Fuel tank - 25.5 gal. (US)
- 3-stack after cooler/radiator/ oil cooler configuration
- Glow Plugs
- Maintenance free 1000 CCA battery with master electrical disconnect

OPERATOR'S PROTECTIVE STRUCTURE:
- Enclosed Cab with Heater and AC
- Control lockout system
- Tilt forward ROPS/FOPS
- Electric parking brake control
- Hand throttle
- Foot throttle
- 2 Speed Low effort servo-assist H-Pattern hand controls
- Proportional auxiliary hydraulic control
- Operator's compartment floor cleanout
- Rear window with emergency escape
- Padded seat bar with integral arm rests
- Air Suspension Seat, with 2" retractable lap seat belt
- Foot rest
- Dome Light
- 12V Power plug socket
- Cup holder

OPERATOR'S PROTECTIVE STRUCTURE (Continued):
- Tool Pocket
- Top window
- Headliner
- Alarm package (backup and horn)

OTHER STANDARD FEATURES:
- Lights - 2 front, 2 side, 2 rear flood (halogen)
- Heavy Duty Front Lights
- Pre-wired for rotating beacon
- Service access hood, lockable
- Single point daily service
- Tail lights
- Remote oil drain
- Remote oil and fuel filters
- Block Heater
- Debris Ingression Sealing

INSTRUMENTATION:
- Advanced Instrument Cluster with
  - Hour meter
  - Tachometer
  - Fuel gauge
  - Hydraulic oil temperature gauge
  - Engine coolant temperature gauge
  - Diagnostic features
  - Security lock-out
- Warning lights with alarms:
  - Critical system stop
  - Engine system
  - Hydraulic system
  - Electrical and diagnostic system
- Warning alarms:
  - Battery voltage (plus display)
  - Diesel particulate filter (DPF)
  - Oil Service
- Indicator Light:
  - Engine preheat, Parking brake, Seat bar reminder

SR250 T4 INTERIM SKID STEER LOADER
US PRICE LIST

(Ex Works Wichita, KS)

Standard Equipment

DRIVE:
- Servo assist, two-speed hydrostatic four wheel drive
- Spring applied hydraulic release (SAHR) disc parking brake
- Dynamic braking
- ASA #100 drive chain

HYDRAULICS:
- 6 micron oil filtration system
- 3 spool loader control valve
- Auxiliary hydraulics, proportional thumb wheel activated: loader arm mounted with ISO specification flat face "connect-under-pressure" disconnects including case drain
- Heavy duty hydraulic oil cooler
- Loader arm float position
- Auxiliary hydraulic function lockout override
- Loader arm circuit lockout override
- Self Level
- Ride Control

LOADER:
- Heavy Duty Hydraulic attachment coupler
- Radial arm geometry
- Loader lift arm support strut
- SAE operating load: 2500 lbs.
- Tipping load: 5000 lbs.

TIRES
- 12 X 16.5 Heavy Duty - 70 inch
- Over-the-Tire Width (OTW)
- Galaxy XD2002

SR250 T4 INTERIM SKID STEER LOADER
US PRICE LIST

(Ex Works Wichita, KS)

Models

COMMERCIAL MODEL	Weight	Factory Data	List Price
SR250-T4 INTERIM	7,565 LB		$62,485.00

SR250 T4 INTERIM SKID STEER LOADER
US PRICE LIST

(Ex Works Wichita, KS)

Factory Supplied Options

Order Code	Description	Weight	Factory Data	List Price

CONTROLS AND TRANSMISSION

SD_01401 DRIVE CONTROL TYPE

		761040	Hand Controls (H-Pattern)			No Charge
		761042	E-H Controls			No Charge

SD_01100 CONTROLS LEVEL

		761029	2 Speed Mechanical Controls			No Charge
		761031	2 Speed E-H Controls **Electro-Hydraulic Switchable (ISO-H Pattern) Controls with Two Speed**			$2,245.00

ROPS/CAB

SD_05009 CAB

		761043	Open Cab (No Heat or HVAC) **with top window and keyed start**			($5,700.00)
		761046	Enclosed Cab with Heater **Includes side windows, front glass door with wiper, shoulder belt, radio with speakers and keyless start**			($1,500.00)
		761045	Enclosed Cab with Heater & AC **Includes side windows, front glass door with wiper, shoulder belt, radio with speakers and keyless start**			No Charge
		761184	Enclosed Cab w/Heat -Demo Door **Includes side windows, 1/2" polycarbonate front door with wiper, shoulder belt, radio with speakers and keyless start**			$314.00
		761183	Enclosed Cab w/HVAC -Demo Door **Includes side windows, 1/2" polycarbonate front door with wiper, shoulder belt, radio with speakers and keyless start**			$1,908.00

SD_05016 OPEN CAB TRIM

		X05016X	No Open Cab Interior Trim Pkg			No Charge
		761186	Open Cab Interior Trim Package **For use with Open Cab. Covers interior sides and rear.**			$330.00

SD_05185 CAB SEAT

		761050	Non Suspension Seat			($974.00)
		761052	Suspension Seat (Vinyl)			($624.00)

SR250 T4 INTERIM SKID STEER LOADER
US PRICE LIST

(Ex Works Wichita, KS)

		761062	Air Ride Suspension Seat **(Fabric) with temperature control (may not be ordered with Open Cab option 761043)**			No Charge

SD_K6480 HEAVY DUTY FRONT LIGHTS

		XK6480X	No Heavy Duty Front Lights			($100.00)
		761201	Heavy Duty Front Lights			No Charge

REAR DOOR

SD_39021 REAR DOOR

		761075	Rear Door			No Charge
		761205	Heavy Duty Rear Door			$471.00

COUPLER

SD_K5101 COUPLERS

		726003	Manual Coupler			($1,100.00)
		761206	Heavy Duty Hydraulic Coupler			No Charge

BLOCK HEATER

SD_02086 BLOCK HEATER

		X02086X	No Block Heater			($125.00)
		761048	Block Heater (120V)			No Charge

OPERATOR MANUALS

SD_32035 LANGUAGE OPTIONS

		761085	English USA			No Charge
		761088	French Canadian			No Charge
		761097	Spanish Latin American			No Charge

OPTIONAL PACKAGES

SD_01201 OPTION PACKAGES

		761032	Standard Equipment Only			($950.00)
		761034	Front Electric/Multi-Function **Contains Front Electric (Multi-Function) for Standard Auxiliaries**			($587.00)
		761033	Performance Package **Contains ON/OFF One-Way Self Leveling and Ride Control**			No Charge

SR250 T4 INTERIM SKID STEER LOADER
US PRICE LIST

(Ex Works Wichita, KS)

		761035	Performance w/Front Electric **Contains ON/OFF One-Way Self Leveling, Ride Control and Front Electric**			$669.00
		761036	High Flow Package **Contains High Flow Hydraulics with Front Electric**			$1,421.00
		761037	High Flow Plus Package **Contains Front Electric, High Flow Hydraulics, ON/OFF One-way Self Leveling and Ride Control**			$2,678.00
		761039	Enhanced High Flow Package **Only available with units equipped with EH Controls. Contains 4000 PSI High Flow Hydraulics, Second Auxiliaries, Front Electric, High Flow Hydraulics, ON/OFF One-way Self Leveling and Ride Control**			$6,181.00

TIRES

SD_16068 TIRE OPTIONS

		8503107	12x16.5 Heavy Duty (70 OTW) **10PR Stamped Center - Galaxy XD2002**			No Charge
		8503207	12x16.5 Premium (70 OTW) **10PR Welded Plate Center - Galaxy Beefy Baby II**			$221.00
		8503307	12x16.5 Premium-Liner (70 OTW) **10PR Welded Plate Center - Galaxy Beefy Baby II**			$391.00
		8503407	12x16.5 Severe Duty (70 OTW) **12PR Welded Plate Center - Galaxy Hulk**			$536.00
		8503507	12x16.5 Mining (70 OTW) **12PR Welded Plate Center - Galaxy King Kong**			$639.00
		8503607	12x16.5 Non-Pneumatic (70 OTW) **Welded Plate Center - Solid Flex**			$3,152.00
		8505007	33X15.5 Flotation (76 OTW) **12PR Welded Plate Center - Galaxy Hippo**			$371.00
		8505107	14x17.5 Premium (76 OTW) **may not be used for over-the-wheel tracks** **10PR Welded Plate Center - Galaxy Beefy Baby II**			$536.00

FRONT ATTACHMENTS

BUCKETS

SD_K5231 BUCKETS

		XK5231X	No Bucket			No Charge
Dirt & Foundry Bucket						
		761125	72" Dirt & Foundry Bucket **(1829 mm), 16.7 cu. ft. Heaped Capacity**			$1,071.00
		761126	78" Dirt & Foundry Bucket **(1981 mm), 18.4 cu. ft. Heaped Capacity**			$1,112.00

SR250 T4 INTERIM SKID STEER LOADER
US PRICE LIST

(Ex Works Wichita, KS)

		Heavy Duty Dirt Bucket				
		761142	72" Heavy Duty Dirt Bucket **(1829 mm), 14.6 cu. ft. Heaped Capacity**			$1,329.00
		761143	78" Heavy Duty Dirt Bucket **(1981 mm), 15.9 cu. ft. Heaped Capacity**			$1,442.00
		761144	84" Heavy Duty Dirt Bucket **(2134 mm), 19.4 cu. ft. Heaped Capacity**			$1,550.00
		Light Material Bucket				
		761136	72" Light Material Bucket **(1829 mm), 23.7 cu. ft. Heaped Capacity**			$901.00
		761137	84" Light Material Bucket **(2134 mm), 27.9 cu. ft. Heaped Capacity**			$1,051.00
		Low Profile Buckets				
		761129	72" Low Profile Bucket **(1829 mm), 14.5 cu. ft. Heaped Capacity**			$968.00
		Low Profile Extended Bucket				
		761132	72" Low Profile Extended **(1829 mm), 17.1 cu. ft. Heaped Capacity**			$1,076.00
		761133	78" Low Profile Extended **(1981 mm), 18.6 cu. ft. Heaped Capacity**			$1,164.00
		761134	84" Low Profile Extended **(2134 mm), 20.2 cu. ft. Heaped Capacity**			$1,257.00
		Manure & Slurry Bucket				
		761139	72" Manure-Slurry Bucket **(1829 mm), 19.1 cu. ft. Heaped Capacity**			$917.00
		761140	84" Manure-Slurry Bucket **(2134 mm), 22.5 cu. ft. Heaped Capacity**			$1,066.00

SPILL GUARDS

SD_K5400 SPILL GUARDS

		XK5400X	No Spill Guard			No Charge
		761177	72" Spill Guard **For use with Heavy Duty Buckets only**			$216.00
		761178	78" Spill Guard **For use with Heavy Duty Buckets only**			$237.00
		761179	84" Spill Guard **For use with Heavy Duty Buckets only**			$252.00

BOLT ON CUTTING EDGES

SD_K6399 BOLT ON CUTTING EDGE

		XK6399X	No Bolt on Cutting Edge			No Charge
		761147	72" Bolt on Cutting Edge			$258.00
		761148	78" Bolt on Cutting Edge			$278.00
		761149	84" Bolt on Cutting Edge			$299.00

SR250 T4 INTERIM SKID STEER LOADER
US PRICE LIST

(Ex Works Wichita, KS)

MOVE TO BIC

SD_K6440 OFF-SITE SERVICE

		XK6440X	No Offsite Service Arrangement			No Charge
		761175	Offsite Service Arrangement			No Charge

SPECIAL PAINT

SD_50103 SPECIAL PAINT

		X50103X	No Special Paint			No Charge
		726029	Special Paint **The price listed is for a color change only from the standard factory color: CNH #86609760 (MS42-Tan). All Special Color formulations will be applied using approved factory processes and materials. Metallic or other special formulations and/or materials are not available. A color chip must be provided to CNH for non CNH colors. A minimum lead time of 8 business weeks will be required prior to production. Unless specified, regular production decals will be applied. Requests can be made that decals not be applied. However, SAFETY decals MUST BE APPLIED in all cases. The following components remain CNH grey: lift & bucket cylinders, front coupler and attachments, ROPS, side screens, rear hood, upper chassis and control links.**			$3,213.00

TELEMATICS

SD_K6450 TELEMATICS

		XK6450X	No Telematics			No Charge
		761187	CASE SiteWatch Telematics			$874.00

SR250 T4 INTERIM SKID STEER LOADER
US PRICE LIST

(Ex Works Wichita, KS)

Factory Supplied Attachments

Order Code			Description	Weight	Factory Data	List Price
Basic Attachments						
		735030006	Demo Rear Door Insert	32 LB		$330.00
		735006006	Beacon Kit	1 LB		$165.00
		735007006	4-Corner LED Strobe Kit Must order connector. Reference dependency matrix.	24 LB		$536.00
		735159026	Heater Complete For use with Tier 3 Must order applicable harness. Reference dependency matrix.	137 LB		$1,472.00
		735159046	Heater Complete For use with Tier 4 Must order applicable harness. Reference dependency matrix.	141 LB		$1,472.00
		735158056	HVAC Complete For use with Tier 3 Must order applicable harness. Reference dependency matrix.	379 LB		$3,162.00
		735158146	HVAC Complete For use with Tier 4 Must order applicable harness. Reference dependency matrix.	384 LB		$3,162.00
		735146006	Three Point Seat Belt	4 LB		$250.00
		735011006	Glass Front Door Kit Center mounted wiper Requires three point seat belt. Must order applicable harness. Reference dependency matrix.	182 LB		$1,653.00
		735012006	Demo Front Door Kit Center mounted wiper Requires three point seat belt. Must order applicable harness. Reference dependency matrix.	182 LB		$2,905.00
		735013006	Cab Side Windows Kit	139 LB		$927.00
		735016006	Radio Kit Must order applicable harness. Reference dependency matrix.	16 LB		$443.00
		735150006	Open Cab Interior Trim Kit For use with Open Cab. Covers interior sides and rear.	20 LB		$399.00
		735020016	Road Light Kit Must order applicable harness. Reference dependency matrix.	111 LB		$649.00
		735124006	Side Lamp Kit	6 LB		$272.00
		735021006	Multi-Function Front Electrical Mech Kit For use with SR175 and SR200/SR210 Must order applicable handle. Reference dependency matrix.	11 LB		$294.00
		735125006	Multi-Function Front Electrical E-H Kit For use with SR175 and SR200/SR210 Must order applicable handle. Reference dependency matrix.	11 LB		$294.00
		735022026	One Way Self Level Kit	14 LB		$520.00
		735023006	Ride Control Kit Must order applicable handle. Reference dependency martix.	33 LB		$515.00
		735024006	Hydraulic Coupler Kit For use with SR175 and SR220/SR210 Must order applicable harness. Reference dependency matrix.	160 LB		$1,324.00
		735025056	High Flow Auxiliary Kit For use with TIER 4 models ONLY. Must order applicable harness. Reference dependency matrix.	192 LB		$2,699.00

SR250 T4 INTERIM SKID STEER LOADER
US PRICE LIST

(Ex Works Wichita, KS)

		735025036	High Flow Auxiliary Kit For use with TIER 3 models ONLY. Must order applicable harness. Reference dependency matrix.	190 LB		$2,699.00
		735027036	Second Hydraulic Front Auxiliary Kit Must order applicable handle. Reference dependency matrix.	84 LB		$1,103.00
		735036026	4-Point Lift Hook Kit	10 LB		$238.00
		735037006	Single Point Lift Hook Kit	289 LB		$1,102.00
		735038006	FOPS Level 2 Modification Kit	61 LB		$368.00
		735039026	Extra Counterweight Kit	362 LB		$736.00
		735040056	Aspirator Kit For use with TIER 3 models ONLY.	9 LB		$340.00
		735040076	Aspirator Kit For use with TIER 4 models ONLY.	16 LB		$340.00
		735042006	Interior Mirror Kit	4 LB		$62.00
		735045006	Foot Control Conversion Kit Not available for units equipped with Electro Hydraulic (EH) controls. For use with Tier 3	54 LB		$659.00
		735045046	Foot Control Conversion Kit Not available for units equipped with Electro Hydraulic (EH) controls. For use with Tier 4	52 LB		$659.00
		735046026	Hand Control Conversion Kit For use with Tier 3 models	78 LB		$883.00
		735046056	Hand Control Conversion Kit For use with units built PRIOR to S/N NDM461595 (SR220), NDM443253 (SR250), NDM469210 (SV250) and NDM460105 (SV300)	77 LB		$883.00
		735046066	Hand Control Conversion Kit For use with units built AFTER S/N NDM461595 (SR220), NDM443253 (SR250), NDM469210 (SV250) and NDM460105 (SV300)	76 LB		$883.00
		735047006	120V Block Heater Kit	6 LB		$221.00
		735142006	Cylinder Guard Kit	21 LB		$792.00
		735151046	Debris Seal Kit Reduces debris ingression to engine compartment and chassis For use with models built July 2012 or later	23 LB		$253.00
		735152036	New Hood with Debris Seal Kit Contains new hood and additional sealing items Reduces debris ingression to engine compartment and chassis For use with Tier 3 models built prior to July 2012	124 LB		$749.00
		735161006	Heavy Duty Front Lights - Radial Model For use with Radial Models	26 LB		$429.00
		735163006	Heavy Duty Rear Door	140 LB		$769.00

Handles - E-H Models

		735126006	LH EH Handle Kit (NO 2nd Aux) Adds Front Electric on all models except SR130 and SR160	2 LB		$191.00
		735127006	RH EH Handle Kit Adds Front Electric on all models except SR130 and SR160	2 LB		$191.00
		735132006	LH EH Handle Kit (WITH 2nd Aux) Adds Second Auxiliary with Front Electric.	2 LB		$191.00

SR250 T4 INTERIM SKID STEER LOADER
US PRICE LIST

(Ex Works Wichita, KS)

Handles - Mechanical Models

		735134006	LH Mechanical Handle Kit (NO 2nd Aux) Adds Front Electric.	2 LB		$191.00
		735135006	LH Mechanical Handle Kit (WITH 2nd Aux) Adds Second Auxiliary with Front Electric.	2 LB		$191.00
		735136006	RH Mechanical Handle Kit Adds Front Electric.	2 LB		$191.00

Pallet Forks

		735075006	Pallet Fork Frame w/48" Tines	540 LB		$1,355.00

Dirt & Foundry Bucket

		735055016	72" Dirt & Foundry Bucket (1829 mm), 16.7 cu. ft. Heaped Capacity	407 LB		$1,071.00
		735056016	78" Dirt & Foundry Bucket (1981 mm), 18.4 cu. ft. Heaped Capacity	429 LB		$1,112.00

Low Profile Bucket

		735059016	72" Low Profile Bucket (1829 mm), 14.5 cu. ft. Heaped Capacity	471 LB		$968.00

Low Profile Extended Bucket

		735062016	72" Low Profile Extended Bucket (1829 mm), 17.1 cu. ft. Heaped Capacity	504 LB		$1,076.00
		735063016	78" Low Profile Extended Bucket (1981 mm), 18.6 cu. ft. Heaped Capacity	531 LB		$1,164.00
		735064016	84" Low Profile Extended Bucket (2134 mm), 20.2 cu. ft. Heaped Capacity	607 LB		$1,257.00

Light Material Bucket

		735066016	72" Light Material Bucket (1829 mm), 23.7 cu. ft. Heaped Capacity	466 LB		$901.00
		735067016	84" Light Material Bucket (2134 mm), 27.9 cu. ft. Heaped Capacity	532 LB		$1,051.00

Manure & Slurry Bucket

		735069016	72" Manure-Slurry Bucket (1829 mm), 19.1 cu. ft. Heaped Capacity	469 LB		$917.00
		735070016	84" Manure-Slurry Bucket (2134 mm), 22.5 cu. ft. Heaped Capacity	535 LB		$1,066.00

Heavy Duty Dirt Bucket

		735072016	72" Heavy Duty Dirt Bucket (1829 mm), 14.6 cu. ft. Heaped Capacity	501 LB		$1,329.00
		735073016	78" Heavy Duty Dirt Bucket (1981 mm), 15.9 cu. ft. Heaped Capacity	526 LB		$1,442.00
		735074016	84" Heavy Duty Dirt Bucket (2134 mm), 19.4 cu. ft. Heaped Capacity	550 LB		$1,550.00

SR250 T4 INTERIM SKID STEER LOADER
US PRICE LIST

(Ex Works Wichita, KS)

Heavy Duty Tire Assembly

		735094006	12x16.5 Heavy Duty (70 OTW) RH Kit Galaxy XD2002 Reference Loader Stop matrix. 1 tire assembly	141 LB		$447.00
		735114006	12x16.5 Heavy Duty (70 OTW) LH Kit Galaxy XD2002 Reference Loader Stop matrix. 1 tire assembly	141 LB		$447.00

Premium Tire Assembly

		735095006	12x16.5 Premium (70 OTW) RH Kit Galaxy Beefy Baby II Reference Loader Stop matrix. 1 tire assembly	152 LB		$546.00
		735115006	12x16.5 Premium (70 OTW) LH Kit Galaxy Beefy Baby II Reference Loader Stop matrix. 1 tire assembly	152 LB		$546.00
		735102006	14x17.5 Premium (76 OTW) RH Kit Galaxy Beefy Baby II Reference Loader Stop matrix. 1 tire assembly	89 LB		$745.00
		735121006	14x17.5 Premium (76 OTW) LH Kit Galaxy Beefy Baby II Reference Loader Stop matrix. 1 tire assembly	89 LB		$745.00

Premium-Liner Tire Assembly

		735096006	12x16.5 Premium-Liner (70 OTW) RH Kit Galaxy Beefy Baby II Reference Loader Stop matrix. 1 tire assembly	152 LB		$680.00
		735116006	12x16.5 Premium-Liner (70 OTW) LH Kit Galaxy Beefy Baby II Reference Loader Stop matrix. 1 tire assembly	152 LB		$680.00

Non-Pneumatic Tire Assembly

		735119006	12x16.5 Non-Pneumatic (70 OTW) RH Kit Solid Flex Reference Loader Stop matrix. 1 tire assembly	301 LB		$1,274.00
		735099006	12x16.5 Non-Pneumatic (70 OTW) LH Kit Solid Flex Reference Loader Stop matrix. 1 tire assembly	301 LB		$1,274.00

Severe Duty Tire Assembly

		735097006	12x16.5 Severe Duty (70 OTW) RH Kit Galaxy Hulk Reference Loader Stop matrix. 1 tire assembly	168 LB		$691.00
		735117006	12x16.5 Severe Duty (70 OTW) LH Kit Galaxy Hulk Reference Loader Stop matrix. 1 tire assembly	168 LB		$691.00

Mining Tire Assembly

		735098006	12x16.5 Mining (70 OTW) RH Kit Galaxy King Kong Reference Loader Stop matrix. 1 tire assembly	439 LB		$656.00
		735118006	12x16.5 Mining (70 OTW) LH Kit Galaxy King Kong Reference Loader Stop matrix. 1 tire assembly	439 LB		$656.00

SR250 T4 INTERIM SKID STEER LOADER
US PRICE LIST

(Ex Works Wichita, KS)

Flotation Tire Assembly

		735100006	33x15.5 Flotation (76 OTW) RH Kit Galaxy Hippo Reference Loader Stop matrix. 1 tire assembly	178 LB		$748.00
		735120006	33x15.5 Flotation (76 OTW) LH Kit Galaxy Hippo Reference Loader Stop matrix. 1 tire assembly	178 LB		$748.00

SR270 T4 FINAL SKID STEER LOADER
US PRICE LIST

(Ex Works Wichita, KS)

Standard Equipment

ENGINE:
- FPT F5B FL413E water-cooled diesel engine
- 207 CID (3.4L) Turbo
- Tier 4 Final Certified
- Diesel Oxidation Catalyst (DOC) with Selective Catalytic Reduction (SCR) Muffler
- High Pressure Common Rail (HPCR) Fuel Injection
- Charged Air Cooler (CAC)
- Horsepower:
  - Gross 90
  - Net 84
  - Peak torque 282 lb•ft (383 N•m)
- 120 amp alternator
- Air cleaner - dual element
- Organic Acid Technology (OAT) Anti-freeze solution to -34° F
- Fuel tank - 25.5 gal. (US)
- Diesel Exhaust Fluid (DEF) Tank - 2.8 gal. (U.S.)
- 3-stack after cooler/radiator/ oil cooler configuration
- Glow Plugs
- Maintenance free 1000 CCA battery with master electrical disconnect

OPERATOR'S PROTECTIVE STRUCTURE:
- Enclosed Cab with Heater and AC
- Control lockout system
- Tilt forward ROPS/FOPS
- Electric parking brake control
- Hand throttle
- Foot throttle
- Low effort servo-assist H-Pattern hand controls
- Proportional auxiliary hydraulic control
- Operator's compartment floor cleanout
- Rear window with emergency escape
- Padded seat bar with integral arm rests
- Air Ride Suspension Seat with 2" retractable lap seat belt

OPERATOR'S PROTECTIVE STRUCTURE (Continued):
- Foot rest
- Dome Light
- 12V Power plug socket
- Cup holder
- Tool Pocket
- Top window
- Headliner
- Alarm package (backup and horn)

OTHER STANDARD FEATURES:
- Lights - 2 front, 2 side, 2 rear flood (halogen)
- Heavy Duty Front Lights
- Pre-wired for rotating beacon
- Service access hood, lockable
- Single point daily service
- Tail lights
- Remote oil drain
- Remote oil and fuel filters
- Block Heater
- Debris Ingression Prevention Sealing
- Heavy Duty Rear Door

INSTRUMENTATION:
- Advanced Instrument Cluster with
  - Hour meter
  - Tachometer
  - Fuel gauge
  - Diesel Exhaust Fluid gauge
  - Engine coolant temperature gauge
  - Diagnostic features
  - Security lock-out
- Warning lights with alarms:
  - Critical system stop
  - Engine system
  - Hydraulic system
  - Electrical and diagnostic system
- Warning alarms:
  - Battery voltage (plus display)
  - Diesel Exhaust Fluid (DEF)
  - Oil Service

SR270 T4 FINAL SKID STEER LOADER
US PRICE LIST

(Ex Works Wichita, KS)

Standard Equipment

INSTRUMENTATION (continued):
- Indicator Light:
  - Engine preheat, Parking brake, Seat bar reminder

DRIVE:
- Servo assist, two-speed hydrostatic four wheel drive
- Spring applied hydraulic release (SAHR) disc parking brake
- Dynamic braking
- ASA #100 drive chain

HYDRAULICS:
- 6 micron oil filtration system
- 3 spool loader control valve
- Auxiliary hydraulics, proportional thumb wheel activated: loader arm mounted with ISO specification flat face "connect-under-pressure" disconnects including case drain
- Heavy duty hydraulic oil cooler
- Loader arm float position
- Auxiliary hydraulic function lockout override
- Loader arm circuit lockout override
- Self Level
- Ride Control

LOADER:
- Heavy Duty Hydraulic attachment coupler
- Radial arm geometry
- Loader lift arm support strut
- SAE operating load: 2700 lbs.
- Tipping load: 5400 lbs.

TIRES
- 12 X 16.5 Heavy Duty - 70 inch Over-the-Tire Width (OTW) Galaxy XD2002

SR270 T4 FINAL SKID STEER LOADER
US PRICE LIST

(Ex Works Wichita, KS)

Models

COMMERCIAL MODEL	Weight	Factory Data	List Price
SR270 T4 FINAL	8,117 LB		$69,841.00

SR270 T4 FINAL SKID STEER LOADER
US PRICE LIST

(Ex Works Wichita, KS)

Factory Supplied Options

Order Code	Description	Weight	Factory Data	List Price

CONTROLS AND TRANSMISSION

SD_01100 CONTROLS LEVEL

		761029	2 Speed Mechanical Controls			No Charge
		761031	2 Speed E-H Controls **Electro-Hydraulic Switchable (ISO-H Pattern) Controls with Two Speed**			$2,245.00

SD_01401 DRIVE CONTROL TYPE

		761040	Hand Controls (H-Pattern)			No Charge
		761042	E-H Controls			No Charge

ROPS/CAB

SD_05009 CAB

		761043	Open Cab (No Heat or HVAC) **with top window and keyed start**			($5,700.00)
		761046	Enclosed Cab with Heater **Includes side windows, front glass door with wiper, shoulder belt, radio with speakers and keyless start**			($1,500.00)
		761045	Enclosed Cab with Heater & AC **Includes side windows, front glass door with wiper, shoulder belt, radio with speakers and keyless start**			No Charge
		761184	Enclosed Cab w/Heat -Demo Door **Includes side windows, 1/2" polycarbonate front door with wiper, shoulder belt, radio with speakers and keyless start**			$314.00
		761183	Enclosed Cab w/HVAC -Demo Door **Includes side windows, 1/2" polycarbonate front door with wiper, shoulder belt, radio with speakers and keyless start**			$1,908.00

SD_05016 OPEN CAB TRIM

		X05016X	No Open Cab Interior Trim Pkg			No Charge
		761186	Open Cab Interior Trim Package **For use wtih Open Cab. Covers interior sides and rear.**			$330.00

SD_05185 CAB SEAT

		761050	Non Suspension Seat			($974.00)
		761052	Suspension Seat (Vinyl)			($624.00)

SR270 T4 FINAL SKID STEER LOADER
US PRICE LIST

(Ex Works Wichita, KS)

		761062	Air Ride Suspension Seat **(Fabric) with temperature control** **(may not be ordered with Open Cab option 761043)**			No Charge

SD_K6480 HEAVY DUTY FRONT LIGHTS

		XK6480X	No Heavy Duty Front Lights			($100.00)
		761201	Heavy Duty Front Lights			No Charge

COUPLER

SD_K5101 COUPLERS

		726003	Manual Coupler			($1,100.00)
		761206	Heavy Duty Hydraulic Coupler			No Charge

BLOCK HEATER

SD_02086 BLOCK HEATER

		X02086X	No Block Heater			($125.00)
		761048	Block Heater (120V)			No Charge

OPERATOR MANUALS

SD_32035 LANGUAGE OPTIONS

		761085	English USA			No Charge
		761088	French Canadian			No Charge
		761097	Spanish Latin American			No Charge

OPTIONAL PACKAGES

SD_01201 OPTION PACKAGES

		761032	Standard Equipment Only			($950.00)
		761034	Front Electric/Multi-Function **Contains Front Electric (Multi-Function) for Standard Auxiliaries**			($587.00)
		761033	Performance Package **Contains ON/OFF One-Way Self Leveling and Ride Control**			No Charge
		761035	Performance w/Front Electric **Contains ON/OFF One-Way Self Leveling, Ride Control and Front Electric**			$669.00
		761036	High Flow Package **Contains High Flow Hydraulics with Front Electric**			$1,421.00
		761037	High Flow Plus Package **Contains Front Electric, High Flow Hydraulics, ON/OFF One-Way Self Leveling and Ride Control**			$2,678.00

SR270 T4 FINAL SKID STEER LOADER
US PRICE LIST

(Ex Works Wichita, KS)

		761039	Enhanced High Flow Package **Only available with units equipped with EH Controls.** **Contains 4000 PSI High Flow Hydraulics, Second Auxiliaries, Front Electric, High Flow Hydraulics, ON/OFF One-way Self Leveling and Ride Control**			$6,181.00

TIRES

SD_16068 TIRE OPTIONS

		8503107	12x16.5 Heavy Duty (70 OTW) **10PR Stamped Center - Galaxy XD2002**			No Charge
		8503207	12x16.5 Premium (70 OTW) **10PR Stamped Center - Galaxy Beefy Baby II**			$221.00
		8503307	12x16.5 Premium-Liner (70 OTW) **10PR Stamped Center - Galaxy Beefy Baby II**			$391.00
		8503407	12x16.5 Severe Duty (70 OTW) **12PR Welded Plate Center - Galaxy Hulk**			$536.00
		8503507	12x16.5 Mining (70 OTW) **12PR Welded Plate Center - Galaxy King Kong**			$639.00
		8503607	12x16.5 Non-Pneumatic (70 OTW) **Welded Plate Center - Solid Flex**			$3,152.00
		8505007	33X15.5 Flotation (76 OTW) **12PR Welded Plate Center - Galaxy Hippo**			$371.00
		8505107	14x17.5 Premium (76 OTW) **may not be used for over-the-wheel tracks** **10PR Welded Plate Center - Galaxy Beefy Baby II**			$536.00

FRONT ATTACHMENTS

BUCKETS

SD_K5231 BUCKETS

		XK5231X	No Bucket			No Charge
Dirt & Foundry Bucket						
		761125	72" Dirt & Foundry Bucket **(1829 mm), 16.7 cu. ft. Heaped Capacity**			$1,071.00
		761126	78" Dirt & Foundry Bucket **(1981 mm), 18.4 cu. ft. Heaped Capacity**			$1,112.00
Heavy Duty Dirt Bucket						
		761142	72" Heavy Duty Dirt Bucket **(1829 mm), 14.6 cu. ft. Heaped Capacity**			$1,329.00
		761143	78" Heavy Duty Dirt Bucket **(1981 mm), 15.9 cu. ft. Heaped Capacity**			$1,442.00
		761144	84" Heavy Duty Dirt Bucket **(2134 mm), 19.4 cu. ft. Heaped Capacity**			$1,550.00

SR270 T4 FINAL SKID STEER LOADER
US PRICE LIST

(Ex Works Wichita, KS)

Light Material Bucket						
		761136	72" Light Material Bucket **(1829 mm), 14.5 cu. ft. Heaped Capacity**			$901.00
		761137	84" Light Material Bucket **(2134 mm), 27.9 cu. ft. Heaped Capacity**			$1,051.00
Low Profile Bucket						
		761129	72" Low Profile Bucket **(1829 mm), 14.5 cu. ft. Heaped Capacity**			$968.00
Low Profile Extended Bucket						
		761132	72" Low Profile Extended **(1829 mm), 17.1 cu. ft. Heaped Capacity**			$1,076.00
		761133	78" Low Profile Extended **(1981 mm), 18.6 cu. ft. Heaped Capacity**			$1,164.00
		761134	84" Low Profile Extended **(2134 mm), 20.2 cu. ft. Heaped Capacity**			$1,257.00
Manure & Slurry Bucket						
		761139	72" Manure-Slurry Bucket **(1829 mm), 19.1 cu. ft. Heaped Capacity**			$917.00
		761140	84" Manure-Slurry Bucket **(2134 mm), 22.5 cu. ft. Heaped Capacity**			$1,066.00

SPILL GUARDS

SD_K5400 SPILL GUARDS

		XK5400X	No Spill Guard			No Charge
		761177	72" Spill Guard **For use with Heavy Duty Buckets only**			$216.00
		761178	78" Spill Guard **For use with Heavy Duty Buckets only**			$237.00
		761179	84" Spill Guard **For use with Heavy Duty Buckets only**			$252.00

BOLT ON CUTTING EDGES

SD_K6399 BOLT ON CUTTING EDGE

		XK6399X	No Bolt on Cutting Edge			No Charge
		761147	72" Bolt on Cutting Edge			$258.00
		761148	78" Bolt on Cutting Edge			$278.00
		761149	84" Bolt on Cutting Edge			$299.00

MOVE TO BIC

SD_K6440 OFF-SITE SERVICE

		XK6440X	No Offsite Service Arrangement			No Charge
		761175	Offsite Service Arrangement			No Charge

SR270 T4 FINAL SKID STEER LOADER
US PRICE LIST

(Ex Works Wichita, KS)

SPECIAL PAINT

SD_50103 SPECIAL PAINT

		X50103X	No Special Paint			No Charge
		726029	Special Paint **The price listed is for a color change only from the standard factory color: CNH #86609760 (MS42-Tan). All Special Color formulations will be applied using approved factory processes and materials. Metallic or other special formulations and/or materials are not available. A color chip must be provided to CNH for non CNH colors. A minimum lead time of 8 business weeks will be required prior to production. Unless specified, regular production decals will be applied. Requests can be made that decals not be applied. However, SAFETY decals MUST BE APPLIED in all cases. The following components remain CNH grey: lift & bucket cylinders, front coupler and attachments, ROPS, side screens, rear hood, upper chassis and control links.**			$3,213.00

TELEMATICS

SD_K6450 TELEMATICS

		XK6450X	No Telematics			No Charge
		761187	CASE SiteWatch Telematics			$874.00

SR270 T4 FINAL SKID STEER LOADER
US PRICE LIST

(Ex Works Wichita, KS)

Factory Supplied Attachments

Order Code			Description	Weight	Factory Data	List Price
Basic Attachments						
		735030006	Demo Rear Door Insert	32 LB		$330.00
		735006006	Beacon Kit	1 LB		$165.00
		735007006	4-Corner LED Strobe Kit Must order connector. Reference dependency matrix.	24 LB		$536.00
		735159026	Heater Complete For use with Tier 3 Must order applicable harness. Reference dependency matrix.	137 LB		$1,472.00
		735159046	Heater Complete For use with SR220 Tier 4 Interim, SR240 Tier 4 Final, SR250 Tier 4 Interim, SV250 Tier 4 Interim, SV280 Tier 4 Final and SV300 Tier 4 Inteirm Must order applicable harness. Reference dependency matrix.	141 LB		$1,472.00
		735159066	Heater Complete For use with SR270 Tier 4 Final and SV300 Tier 4 Final	118 LB		$1,472.00
		735158056	HVAC Complete For use with SR220 Tier 3 and SR250 Tier 3 Must order applicable harness. Reference dependency matrix.	379 LB		$3,162.00
		735158146	HVAC Complete For use with SR220 Tier 4 Interim and SR250 Tier 4 Interim Must order applicable harness. Reference dependency matrix.	384 LB		$3,162.00
		735158196	HVAC Complete For use with SR270 Tier 4 Final Must order applicable harness. Reference dependency matrix.	394 LB		$3,162.00
		735146006	Three Point Seat Belt	4 LB		$250.00
		735011006	Glass Front Door Kit Center mounted wiper Requires three point seat belt. Must order applicable harness. Reference dependency matrix.	182 LB		$1,653.00
		735012006	Demo Front Door Kit Center mounted wiper Requires three point seat belt. Must order applicable harness. Reference dependency matrix.	182 LB		$2,905.00
		735013006	Cab Side Windows Kit	139 LB		$927.00
		735016006	Radio Kit Must order applicable harness. Reference dependency matrix.	16 LB		$443.00
		735149006	Open Cab Interior Trim Kit For use with SR270 Tier 4 Final and SV300 Tier 4 Final	42 LB		$399.00
		735150006	Open Cab Interior Trim Kit For use with Open Cab. Covers interior sides and rear.	20 LB		$399.00
		735020016	Road Light Kit For use with SR220 Tier 3 and Tier 4 Interim, SR240 Tier 4 Final and SR250 T4 Interim Must order applicable harness. Reference dependency matrix.	111 LB		$649.00
		735124006	Side Lamp Kit	6 LB		$272.00
		735021006	Multi-Function Front Electrical Mech Kit For use with SR220 Tier 3 and Tier 4 Interim, SR240 Tier 4 Final and SR250 Tier 3 and Tier 4 Interim Must order applicable handle. Reference dependency matrix.	11 LB		$294.00

SR270 T4 FINAL SKID STEER LOADER
US PRICE LIST

(Ex Works Wichita, KS)

		735021036	Multi-Function Front Electrical Mech Kit For use with SR270 Tier 4 Final Must order applicable handle. Reference dependency matrix.	62 LB		$294.00
		735125006	Multi-Function Front Electrical E-H Kit For use with SR220 Tier 3 and Tier 4 Interim, SR240 Tier 4 Final and SR250 Tier 3 and Tier 4 Interim	11 LB		$294.00
		735125036	Multi-Function Front Electrical E-H Kit For use with SR270 Tier 4 Final	97 LB		$294.00
		735022026	One Way Self Level Kit	14 LB		$520.00
		735023006	Ride Control Kit Must order applicable handle. Reference dependency martix.	33 LB		$515.00
		735024006	Hydraulic Coupler Kit Must order applicable harness. Reference dependency matrix.	160 LB		$1,324.00
		735025036	High Flow Auxiliary Kit For use with SR220 Tier 3 and SR250 Tier 3 Must order applicable harness. Reference dependency matrix.	190 LB		$2,699.00
		735025056	High Flow Auxiliary Kit For use with SR220 Tier 4 Interim, SR240 Tier 4 Final and SR250 Tier 3 and Tier 4 Interim Must order applicable harness. Reference dependency matrix.	192 LB		$2,699.00
		735025116	High Flow Auxiliary Kit For use with SR270 Tier 4 Final Must order applicable harness. Reference dependency matrix.	97 LB		$2,699.00
		735027036	Second Hydraulic Front Auxiliary Kit For use with SR220 Tier 3 and Tier 4 Interim, SR240 Tier 4 Final and SR250 Tier 3 and Tier 4 Interim Must order applicable handle. Reference dependency matrix.	84 LB		$1,103.00
		735036026	4-Point Lift Hook Kit For use with SR220 Tier 3 and Tier 4 Interim, SR240 T4 Final, SR250 Tier 3 and Tier 4 Interim, SV250 Tier 3 and Tier 4 Interim, SV280 Tier 4 Final and SV300 Tier 4 Interim	10 LB		$238.00
		735036036	4-Point Lift Hook Kit For use with SR270 Tier 4 Final and SV300 Tier 4 Final	20 LB		$238.00
		735037006	Single Point Lift Hook Kit	289 LB		$1,102.00
		735038006	FOPS Level 2 Modification Kit	61 LB		$368.00
		735039026	Extra Counterweight Kit	362 LB		$736.00
		735040056	Aspirator Kit For use with SR220 Tier 3 and SR250 Tier 3	9 LB		$340.00
		735040076	Aspirator Kit For use with SR220 Tier 4 Interim and SR250 Tier 4 Interim	16 LB		$340.00
		735042006	Interior Mirror Kit	4 LB		$62.00
		735045006	Foot Control Conversion Kit For use with Tier 3	54 LB		$659.00
		735045046	Foot Control Conversion Kit Not available for units equipped with Electro Hydraulic (EH) controls.	52 LB		$659.00
		735046026	Hand Control Conversion Kit For use with SR250 Tier 3 and SV300 Tier 3	78 LB		$883.00
		735046056	Hand Control Conversion Kit For use with units built PRIOR to S/N NDM461595 (SR220 Tier 4 Interim), NDM443253 (SR250 Tier 4 Interim), NDM469210 (SV250 Tier 4 Interim) and NDM460105 (SV300 Tier 4 Interim)	77 LB		$883.00

SR270 T4 FINAL SKID STEER LOADER
US PRICE LIST

(Ex Works Wichita, KS)

		735046066	Hand Control Conversion Kit For use with units built AFTER S/N NDM461595 (SR220 Tier 4 Interim and Final), NDM443253 (SR250 Tier 4 Interim and Final), NDM469210 (SV250 Tier 4 Interim and Final) and NDM460105 (SV300 Tier 4 Interim and Final)	76 LB		$883.00
		735047006	120V Block Heater Kit	6 LB		$221.00
		735048006	220V Block Heater Kit	6 LB		$221.00
		735142006	Cylinder Guard Kit	21 LB		$792.00
		735151046	Debris Seal Kit For use with SR220 Tier 3 and Tier 4 Interim, SR240 Tier 4 Final and SR250 Tier 3 and Tier 4 Interim Reduces debris ingression to engine compartmet and chassis	23 LB		$253.00
		735152036	New Hood with Debris Seal Kit For use with SR220 Tier 3 and SR250 Tier 3 Reduces debris ingression to engine compartment and chassis	124 LB		$749.00
		735161006	Heavy Duty Front Lights - Radial Model For use with SR220 T4 Interim, SR240 T4 Final and SR250 T4 Interim	26 LB		$429.00
		735163006	Heavy Duty Rear Door For use with SR220 T4 Interim, SR240 T4 Final, SR250 T4 Interim, SV250 T4 Interim, SV280 T4 Final and SV300 T4 Interim	140 LB		$769.00

Handles - E-H Models

		735126006	LH EH Handle Kit (NO 2nd Aux) Adds Front Electric.	2 LB		$191.00
		735127006	RH EH Handle Kit Adds Front Electric.	2 LB		$191.00
		735132006	LH EH Handle Kit (WITH 2nd Aux) Adds Second Auxiliary with Front Electric.	2 LB		$191.00

Handles - Mechanical Models

		735134006	LH Mechanical Handle Kit (NO 2nd Aux) Adds Front Electric.	2 LB		$191.00
		735135006	LH Mechanical Handle Kit (WITH 2nd Aux) Adds Second Auxiliary with Front Electric.	2 LB		$191.00
		735136006	RH Mechanical Handle Kit Adds Front Electric.	2 LB		$191.00

Pallet Fork

		735075006	Pallet Fork Frame w/48" Tines	540 LB		$1,355.00

Dirt & Foundry Bucket

		735055016	72" Dirt & Foundry Bucket (1829 mm), 16.7 cu. ft. Heaped Capacity	407 LB		$1,071.00
		735056016	78" Dirt & Foundry Bucket (1981 mm), 18.4 cu. ft. Heaped Capacity	429 LB		$1,112.00

Low Profile Bucket

		735059016	72" Low Profile Bucket (1829 mm), 14.5 cu. ft. Heaped Capacity	471 LB		$968.00

SR270 T4 FINAL SKID STEER LOADER
US PRICE LIST

(Ex Works Wichita, KS)

Low Profile Extended Bucket

		735062016	72" Low Profile Extended Bucket (1829 mm), 17.1 cu. ft. Heaped Capacity	504 LB		$1,076.00
		735063016	78" Low Profile Extended Bucket (1981 mm), 18.6 cu. ft. Heaped Capacity	531 LB		$1,164.00
		735064016	84" Low Profile Extended Bucket (2134 mm), 20.2 cu. ft. Heaped Capacity	607 LB		$1,257.00

Light Material Bucket

		735066016	72" Light Material Bucket (1829 mm), 23.7 cu. ft. Heaped Capacity	466 LB		$901.00
		735067016	84" Light Material Bucket (2134 mm), 27.9 cu. ft. Heaped Capacity	532 LB		$1,051.00

Manure & Slurry Bucket

		735069016	72" Manure-Slurry Bucket (1829 mm), 19.1 cu. ft. Heaped Capacity	469 LB		$917.00
		735070016	84" Manure-Slurry Bucket (2134 mm), 22.5 cu. ft. Heaped Capacity	535 LB		$1,066.00

Heavy Duty Dirt Bucket

		735072016	72" Heavy Duty Dirt Bucket (1829 mm), 14.6 cu. ft. Heaped Capacity	501 LB		$1,329.00
		735073016	78" Heavy Duty Dirt Bucket (1981 mm), 15.9 cu. ft. Heaped Capacity	526 LB		$1,442.00
		735074016	84" Heavy Duty Dirt Bucket (2134 mm), 19.4 cu. ft. Heaped Capacity	550 LB		$1,550.00

Heavy Duty Tire Assembly

		735094006	12x16.5 Heavy Duty (70 OTW) RH Kit Galaxy XD2002 Reference Loader Stop matrix. 1 tire assembly	141 LB		$447.00
		735114006	12x16.5 Heavy Duty (70 OTW) LH Kit Galaxy XD2002 Reference Loader Stop matrix. 1 tire assembly	141 LB		$447.00

Premium Tire Assembly

		735095006	12x16.5 Premium (70 OTW) RH Kit Galaxy Beefy Baby II Reference Loader Stop matrix. 1 tire assembly	152 LB		$546.00
		735115006	12x16.5 Premium (70 OTW) LH Kit Galaxy Beefy Baby II Reference Loader Stop matrix. 1 tire assembly	152 LB		$546.00
		735102006	14x17.5 Premium (76 OTW) RH Kit Galaxy Beefy Baby II Reference Loader Stop matrix. 1 tire assembly	89 LB		$745.00
		735121006	14x17.5 Premium (76 OTW) LH Kit Galaxy Beefy Baby II Reference Loader Stop matrix. 1 tire assembly	89 LB		$745.00

SR270 T4 FINAL SKID STEER LOADER
US PRICE LIST

(Ex Works Wichita, KS)

Non-Pneumatic Tire Assembly

		735119006	12x16.5 Non-Pneumatic (70 OTW) RH Kit Solid Flex Reference Loader Stop matrix. 1 tire assembly	301 LB		$1,274.00
		735099006	12x16.5 Non-Pneumatic (70 OTW) LH Kit Solid Flex Reference Loader Stop matrix. 1 tire assembly	301 LB		$1,274.00

Premium-Liner Tire Assembly

		735096006	12x16.5 Premium-Liner (70 OTW) RH Kit Galaxy Beefy Baby II Reference Loader Stop matrix. 1 tire assembly	152 LB		$680.00
		735116006	12x16.5 Premium-Liner (70 OTW) LH Kit Galaxy Beefy Baby II Reference Loader Stop matrix. 1 tire assembly	152 LB		$680.00

Severe Duty Tire Assembly

		735097006	12x16.5 Severe Duty (70 OTW) RH Kit Galaxy Hulk Reference Loader Stop matrix. 1 tire assembly	168 LB		$691.00
		735117006	12x16.5 Severe Duty (70 OTW) LH Kit Galaxy Hulk Reference Loader Stop matrix. 1 tire assembly	168 LB		$691.00

Mining Tire Assembly

		735098006	12x16.5 Mining (70 OTW) RH Kit Galaxy King Kong Reference Loader Stop matrix. 1 tire assembly	439 LB		$656.00
		735118006	12x16.5 Mining (70 OTW) LH Kit Galaxy King Kong Reference Loader Stop matrix. 1 tire assembly	439 LB		$656.00

Flotation Tire Assembly

		735100006	33x15.5 Flotation (76 OTW) RH Kit Galaxy Hippo Reference Loader Stop matrix. 1 tire assembly	178 LB		$748.00
		735120006	33x15.5 Flotation (76 OTW) LH Kit Galaxy Hippo Reference Loader Stop matrix. 1 tire assembly	178 LB		$748.00

SV250 T4 INTERIM SKID STEER LOADER
US PRICE LIST

(Ex Works Wichita, KS)

Standard Equipment

ENGINE:
- FPT F5HFL413H water cooled diesel engine
- 207 CID (3.4 L) Turbo
- Tier 4 Interim Certified
- High Pressure Common Rail (HPCR) Fuel Injection
- Charged Air Cooler (CAC)
- Diesel Particulate Filter (DPF)
- Horsepower:
  - Gross 82
  - Net 76
  - Peak torque 257 lb•ft (349 N•m)
- 120 amp alternator
- Air cleaner - dual element
- Anti-freeze solution to -34º F
- Fuel tank - 25.5 gal. (U.S.)
- 3-stack after cooler/radiator/ oil cooler configuration
- Glow Plugs
- Maintenance free 1000 CCA battery with master electrical disconnect

OPERATOR'S PROTECTIVE STRUCTURE:
- Enclosed Cab with Heater and AC
- Control lockout system
- Tilt forward ROPS/FOPS
- Electric parking brake control
- Hand throttle
- Foot throttle
- 2 Speed Low effort ergonomic H-Pattern hand controls
- Proportional auxiliary hydraulic control
- Operator's compartment floor cleanout
- Rear window with emergency escape
- Padded seat bar with integral arm rests
- Air Suspension Seat, with 2" retractable lap seat belt
- Foot rest
- Dome Light

OPERATOR'S PROTECTIVE STRUCTURE (Continued):
- 12V Power plug socket
- Cup holder
- Tool Pocket
- Top window
- Headliner
- Alarm package (backup and horn)

OTHER STANDARD FEATURES:
- Lights - 2 front, 2 side, 2 rear flood (halogen)
- Heavy Duty Front Lights
- Pre-wired for rotating beacon
- Service access hood, lockable
- Single point daily service
- Tail lights
- Remote oil drain
- Remote Oil and Fuel Filters
- Block Heater
- Debris Ingression Sealing

INSTRUMENTATION:
- Advanced Instrument Cluster with
  - Hour meter
  - Tachometer
  - Fuel guage,
  - Hydraulic oil temperature gauge,
  - Engine coolant temperature guage
  - Diagnostic features
  - Security lock-out
- Warning lights with alarms:
  - Critical system stop
  - Engine system
  - Hydraulic system
  - Electrical and diagnostic system
- Warning alarms:
  - Battery voltage (plus display)
  - Diesel particulate filter (DPF)
  - Oil Service
- Indicator Light:
  - Engine preheat
  - Parking brake
  - Seat bar reminder

SV250 T4 INTERIM SKID STEER LOADER
US PRICE LIST

(Ex Works Wichita, KS)

Standard Equipment

DRIVE:
- Servo assist, two-speed hydrostatic four wheel drive
- Spring applied hydraulic release (SAHR) disc parking brake
- Dynamic braking
- ASA #100 drive chain

HYDRAULICS:
- 6 micron oil filtration system
- 3 spool loader control valve
- Auxiliary hydraulics, Proportional thumb wheel activated: loader arm mounted with ISO specification flat face "connect-under-pressure" disconnects
  Including case drain
- Heavy duty hydraulic oil cooler
- Loader arm float position
- Auxiliary hydraulic function lockout override
- Loader arm circuit lockout override
- Self Level
- Ride Control

LOADER:
- Heavy Duty Hydraulic attachment coupler
- Vertical Lift geometry
- In-CAB Loader Lock
- SAE operating load: 2500 lbs.
- Tipping load: 5000 lbs.

TIRES
- 12 X 16.5 Heavy Duty - 70 inch
- Over-the-Tire Width (OTW)
- Galaxy XD2002

SV250 T4 INTERIM SKID STEER LOADER
US PRICE LIST

(Ex Works Wichita, KS)

Models

COMMERCIAL MODEL	Weight	Factory Data	List Price
SV250-T4 INTERIM	7,565 LB		$60,051.00

SV250 T4 INTERIM SKID STEER LOADER
US PRICE LIST

(Ex Works Wichita, KS)

Factory Supplied Options

Order Code	Description	Weight	Factory Data	List Price

CONTROLS AND TRANSMISSION

SD_01401 DRIVE CONTROL TYPE

		761040	Hand Controls (H-Pattern)			No Charge
		761042	E-H Controls			No Charge

SD_01100 CONTROLS LEVEL

		761029	2 Speed Mechanical Controls			No Charge
		761031	2 Speed E-H Controls **Electro-Hydraulic Switchable (ISO-H Pattern) Controls with Two Speed**			$2,245.00

ROPS/CAB

SD_05009 CAB

		761043	Open Cab (No Heat or HVAC) **with top window and keyed start**			($5,700.00)
		761046	Enclosed Cab with Heater **Includes side windows, front glass door with wiper, shoulder belt, radio with speakers and keyless start**			($1,500.00)
		761045	Enclosed Cab with Heater & AC **Includes side windows, front glass door with wiper, shoulder belt, radio with speakers and keyless start**			No Charge
		761184	Enclosed Cab w/Heat -Demo Door **Includes side windows, 1/2" polycarbonate front door with wiper, shoulder belt, radio with speakers and keyless start**			$314.00
		761183	Enclosed Cab w/HVAC -Demo Door **Includes side windows, 1/2" polycarbonate front door with wiper, shoulder belt, radio with speakers and keyless start**			$1,908.00

SD_05016 OPEN CAB TRIM

		X05016X	No Open Cab Interior Trim Pkg			No Charge
		761186	Open Cab Interior Trim Package **For use with Open Cab. Covers interior sides and rear.**			$330.00

SD_05185 CAB SEAT

		761050	Non Suspension Seat			($974.00)
		761052	Suspension Seat (Vinyl)			($624.00)

SV250 T4 INTERIM SKID STEER LOADER
US PRICE LIST

(Ex Works Wichita, KS)

		761062	Air Ride Suspension Seat **(Fabric) with temperature control (may not be ordered with Open Cab option 761043)**			No Charge

SD_K6480 HEAVY DUTY FRONT LIGHTS

		XK6480X	No Heavy Duty Front Lights			($100.00)
		761201	Heavy Duty Front Lights			No Charge

REAR DOOR

SD_39021 REAR DOOR

		761075	Rear Door			No Charge
		761205	Heavy Duty Rear Door			$471.00

COUPLER

SD_K5101 COUPLERS

		726003	Manual Coupler			($1,100.00)
		761206	Heavy Duty Hydraulic Coupler			No Charge

BLOCK HEATER

SD_02086 BLOCK HEATER

		X02086X	No Block Heater			($125.00)
		761048	Block Heater (120V)			No Charge

OPERATOR MANUALS

SD_32035 LANGUAGE OPTIONS

		761085	English USA			No Charge
		761088	French Canadian			No Charge
		761097	Spanish Latin American			No Charge

OPTIONAL PACKAGES

SD_01201 OPTION PACKAGES

		761032	Standard Equipment Only			($950.00)
		761034	Front Electric/Multi-Function **Contains Front Electric (Multi-Function) for Standard Auxiliaries**			($587.00)
		761033	Performance Package **Contains ON/OFF One-Way Self Leveling and Ride Control**			No Charge

SV250 T4 INTERIM SKID STEER LOADER
US PRICE LIST

(Ex Works Wichita, KS)

		761035	Performance w/Front Electric **Contains ON/OFF One-Way Self Leveling, Ride Control and Front Electric**			$669.00
		761036	High Flow Package **Contains High Flow Hydraulics with Front Electric**			$1,421.00
		761037	High Flow Plus Package **Contains Front Electric, High Flow Hydraulics, ON/OFF One-way Self Leveling and Ride Control**			$2,678.00

TIRES

SD_16068 TIRE OPTIONS

		8503107	12x16.5 Heavy Duty (70 OTW) **10PR Stamped Center - Galaxy XD2002**			No Charge
		8503207	12x16.5 Premium (70 OTW) **10PR Welded Plate Center - Galaxy Beefy Baby II**			$221.00
		8503307	12x16.5 Premium-Liner (70 OTW) **10PR Welded Plate Center - Galaxy Beefy Baby II**			$391.00
		8503407	12x16.5 Severe Duty (70 OTW) **12PR Welded Plate Center - Galaxy Hulk**			$536.00
		8503507	12x16.5 Mining (70 OTW) **12PR Welded Plate Center - Galaxy King Kong**			$639.00
		8503607	12x16.5 Non-Pneumatic (70 OTW) **Welded Plate Center - Solid Flex**			$3,152.00
		8505007	33X15.5 Flotation (76 OTW) **12PR Welded Plate Center - Galaxy Hippo**			$371.00
		8505107	14x17.5 Premium (76 OTW) **may not be used for over-the-wheel tracks** **10PR Welded Plate Center - Galaxy Beefy Baby II**			$536.00

FRONT ATTACHMENTS

BUCKETS

SD_K5231 BUCKETS

		XK5231X	No Bucket			No Charge
Dirt & Foundry Bucket						
		761125	72" Dirt & Foundry Bucket **(1829 mm), 16.7 cu. ft. Heaped Capacity**			$1,071.00
		761126	78" Dirt & Foundry Bucket **(1981 mm), 18.4 cu. ft. Heaped Capacity**			$1,112.00
Heavy Duty Dirt Bucket						
		761142	72" Heavy Duty Dirt Bucket **(1829 mm), 14.6 cu. ft. Heaped Capacity**			$1,329.00
		761143	78" Heavy Duty Dirt Bucket **(1981 mm), 15.9 cu. ft. Heaped Capacity**			$1,442.00

SV250 T4 INTERIM SKID STEER LOADER
US PRICE LIST

(Ex Works Wichita, KS)

		761144	84" Heavy Duty Dirt Bucket **(2134 mm), 19.4 cu. ft. Heaped Capacity**			$1,550.00
Light Material Bucket						
		761136	72" Light Material Bucket **(1829 mm), 23.7 cu. ft. Heaped Capacity**			$901.00
		761137	84" Light Material Bucket **(2134 mm), 27.9 cu. ft. Heaped Capacity**			$1,051.00
Low Profile Buckets						
		761129	72" Low Profile Bucket **(1829 mm), 14.5 cu. ft. Heaped Capacity**			$968.00
Low Profile Extended Bucket						
		761132	72" Low Profile Extended **(1829 mm), 17.1 cu. ft. Heaped Capacity**			$1,076.00
		761133	78" Low Profile Extended **(1981 mm), 18.6 cu. ft. Heaped Capacity**			$1,164.00
		761134	84" Low Profile Extended **(2134 mm), 20.2 cu. ft. Heaped Capacity**			$1,257.00
Manure & Slurry Bucket						
		761139	72" Manure-Slurry Bucket **(1829 mm), 19.1 cu. ft. Heaped Capacity**			$917.00
		761140	84" Manure-Slurry Bucket **(2134 mm), 22.5 cu. ft. Heaped Capacity**			$1,066.00

SPILL GUARDS

SD_K5400 SPILL GUARDS

		XK5400X	No Spill Guard			No Charge
		761177	72" Spill Guard **For use with Heavy Duty Buckets only**			$216.00
		761178	78" Spill Guard **For use with Heavy Duty Buckets only**			$237.00
		761179	84" Spill Guard **For use with Heavy Duty Buckets only**			$252.00

BOLT ON CUTTING EDGES

SD_K6399 BOLT ON CUTTING EDGE

		XK6399X	No Bolt on Cutting Edge			No Charge
		761147	72" Bolt on Cutting Edge			$258.00
		761148	78" Bolt on Cutting Edge			$278.00
		761149	84" Bolt on Cutting Edge			$299.00

MOVE TO BIC

SD_K6440 OFF-SITE SERVICE

		XK6440X	No Offsite Service Arrangement			No Charge

SV250 T4 INTERIM SKID STEER LOADER
US PRICE LIST

(Ex Works Wichita, KS)

		761175	Offsite Service Arrangement			No Charge

SPECIAL PAINT

SD_50103 SPECIAL PAINT

		X50103X	No Special Paint			No Charge
		726029	Special Paint **The price listed is for a color change only from the standard factory color: CNH #86609760 (MS42-Tan). All Special Color formulations will be applied using approved factory processes and materials. Metallic or other special formulations and/or materials are not available. A color chip must be provided to CNH for non CNH colors. A minimum lead time of 8 business weeks will be required prior to production. Unless specified, regular production decals will be applied. Requests can be made that decals not be applied. However, SAFETY decals MUST BE APPLIED in all cases. The following components remain CNH grey: lift & bucket cylinders, front coupler and attachments, ROPS, side screens, rear hood, upper chassis and control links.**			$3,213.00

TELEMATICS

SD_K6450 TELEMATICS

		XK6450X	No Telematics			No Charge
		761187	CASE SiteWatch Telematics			$874.00

SV250 T4 INTERIM SKID STEER LOADER
US PRICE LIST

(Ex Works Wichita, KS)

Factory Supplied Attachments

Order Code			Description	Weight	Factory Data	List Price
Basic Attachments						
		735030006	Demo Rear Door Insert	32 LB		$330.00
		735006006	Beacon Kit	1 LB		$165.00
		735007006	4-Corner LED Strobe Kit Must order connector. Reference dependency matrix.	24 LB		$536.00
		735159026	Heater Complete For use with Tier 3 Must order applicable harness. Reference dependency matrix.	137 LB		$1,472.00
		735159046	Heater Complete For use with Tier 4 Must order applicable harness. Reference dependency matrix.	141 LB		$1,472.00
		735158066	HVAC Complete For use with Tier 3 ONLY Must order applicable harness. Reference dependency matrix.	383 LB		$3,162.00
		735158156	HVAC Complete For use with Tier 4 ONLY Must order applicable harness. Reference dependency matrix.	381 LB		$3,162.00
		735146006	Three Point Seat Belt	4 LB		$250.00
		735011006	Glass Front Door Kit Center mounted wiper Requires three point seat belt. Must order applicable harness. Reference dependency matrix.	182 LB		$1,653.00
		735012006	Demo Front Door Kit Center mounted wiper Requires three point seat belt. Must order applicable harness. Reference dependency matrix.	182 LB		$2,905.00
		735013006	Cab Side Windows Kit	139 LB		$927.00
		735016006	Radio Kit Must order applicable harness. Reference dependency matrix.	16 LB		$443.00
		735150006	Open Cab Interior Trim Kit For use with Open Cab. Covers interior sides and rear.	20 LB		$399.00
		735020026	Road Light Kit Must order applicable harness. Reference dependency matrix.	111 LB		$649.00
		735124006	Side Lamp Kit	6 LB		$272.00
		735021016	Multi-Function Front Electrical Mech Kit For use with SV185 Must order applicable handle. Reference dependency matrix.	11 LB		$294.00
		735125016	Multi-Function Front Electrical E-H Kit For use with SV185 Must order applicable handle. Reference dependency matrix.	11 LB		$294.00
		735022016	One Way Self Level Kit For use with SR175	14 LB		$520.00
		735023006	Ride Control Kit Must order applicable handle. Reference dependency martix.	33 LB		$515.00
		735024016	Hydraulic Coupler Kit For use with SV185 Must order applicable harness. Reference dependency matrix.	159 LB		$1,324.00

SV250 T4 INTERIM SKID STEER LOADER
US PRICE LIST

(Ex Works Wichita, KS)

		735025026	High Flow Auxiliary Kit For use with TIER 3 models ONLY. Must order applicable harness. Reference dependency matrix.	193 LB		$2,699.00
		735025066	High Flow Auxiliary Kit For use with TIER 4 models ONLY. Must order applicable harness. Reference dependency matrix.	191 LB		$2,699.00
		735027026	Second Hydraulic Front Auxiliary Kit Must order applicable handle. Reference dependency matrix.	86 LB		$1,103.00
		735036026	4-Point Lift Hook Kit	10 LB		$238.00
		735037046	Single Point Lift Hook Kit	269 LB		$1,102.00
		735038006	FOPS Level 2 Modification Kit	61 LB		$368.00
		735039026	Extra Counterweight Kit	362 LB		$736.00
		735040066	Aspirator Kit For use with TIER 4 models ONLY.	15 LB		$340.00
		735040036	Aspirator Kit For use with TIER 3 models ONLY.	13 LB		$340.00
		735042006	Interior Mirror Kit	4 LB		$62.00
		735045006	Foot Control Conversion Kit Not available for units equipped with Electro Hydraulic (EH) controls. For use with Tier 3	54 LB		$659.00
		735045046	Foot Control Conversion Kit Not available for units equipped with Electro Hydraulic (EH) controls. For use with Tier 4	52 LB		$659.00
		735046056	Hand Control Conversion Kit For use with units built PRIOR to S/N NDM461595 (SR220), NDM443253 (SR250), NDM469210 (SV250) and NDM460105 (SV300)	77 LB		$883.00
		735046066	Hand Control Conversion Kit For use with units built AFTER S/N NDM461595 (SR220), NDM443253 (SR250), NDM469210 (SV250) and NDM460105 (SV300)	76 LB		$883.00
		735047006	120V Block Heater Kit	6 LB		$221.00
		735142006	Cylinder Guard Kit	21 LB		$792.00
		735151066	Debris Seal Kit Reduces debris ingression to engine compartment and chassis For use with models built July 2012 or later	17 LB		$283.00
		735152056	New Hood with Debris Seal Kit Contains new hood and additional sealing items Reduces debris ingression to engine compartment and chassis For use with Tier 3 models built prior to July 2012	109 LB		$901.00
		735161016	Heavy Duty Front Lights - Vertical Model For use with Vertical Models	26 LB		$429.00
		735163006	Heavy Duty Rear Door	140 LB		$769.00

Handles - E-H Models

		735126006	LH EH Handle Kit (NO 2nd Aux) Adds Front Electric on all models except SR130 and SR160	2 LB		$191.00
		735127006	RH EH Handle Kit Adds Front Electric on all models except SR130 and SR160	2 LB		$191.00
		735132006	LH EH Handle Kit (WITH 2nd Aux) Adds Second Auxiliary with Front Electric.	2 LB		$191.00

SV250 T4 INTERIM SKID STEER LOADER
US PRICE LIST

(Ex Works Wichita, KS)

Handles - Mechanical Models

		735134006	LH Mechanical Handle Kit (NO 2nd Aux) Adds Front Electric.	2 LB		$191.00
		735135006	LH Mechanical Handle Kit (WITH 2nd Aux) Adds Second Auxiliary with Front Electric.	2 LB		$191.00
		735136006	RH Mechanical Handle Kit Adds Front Electric.	2 LB		$191.00

Pallet Forks

		735075006	Pallet Fork Frame w/48" Tines	540 LB		$1,355.00

Dirt & Foundry Bucket

		735055016	72" Dirt & Foundry Bucket (1829 mm), 16.7 cu. ft. Heaped Capacity	407 LB		$1,071.00
		735056016	78" Dirt & Foundry Bucket (1981 mm), 18.4 cu. ft. Heaped Capacity	429 LB		$1,112.00

Low Profile Bucket

		735059016	72" Low Profile Bucket (1829 mm), 14.5 cu. ft. Heaped Capacity	471 LB		$968.00

Low Profile Extended Bucket

		735062016	72" Low Profile Extended Bucket (1829 mm), 17.1 cu. ft. Heaped Capacity	504 LB		$1,076.00
		735063016	78" Low Profile Extended Bucket (1981 mm), 18.6 cu. ft. Heaped Capacity	531 LB		$1,164.00
		735064016	84" Low Profile Extended Bucket (2134 mm), 20.2 cu. ft. Heaped Capacity	607 LB		$1,257.00

Light Material Bucket

		735066016	72" Light Material Bucket (1829 mm), 23.7 cu. ft. Heaped Capacity	466 LB		$901.00
		735067016	84" Light Material Bucket (2134 mm), 27.9 cu. ft. Heaped Capacity	532 LB		$1,051.00

Manure & Slurry Bucket

		735069016	72" Manure-Slurry Bucket (1829 mm), 19.1 cu. ft. Heaped Capacity	469 LB		$917.00
		735070016	84" Manure-Slurry Bucket (2134 mm), 22.5 cu. ft. Heaped Capacity	535 LB		$1,066.00

Heavy Duty Dirt Bucket

		735072016	72" Heavy Duty Dirt Bucket (1829 mm), 14.6 cu. ft. Heaped Capacity	501 LB		$1,329.00
		735073016	78" Heavy Duty Dirt Bucket (1981 mm), 15.9 cu. ft. Heaped Capacity	526 LB		$1,442.00
		735074016	84" Heavy Duty Dirt Bucket (2134 mm), 19.4 cu. ft. Heaped Capacity	550 LB		$1,550.00

SV250 T4 INTERIM SKID STEER LOADER
US PRICE LIST

(Ex Works Wichita, KS)

Heavy Duty Tire Assembly

		735094006	12x16.5 Heavy Duty (70 OTW) RH Kit Galaxy XD2002 Reference Loader Stop matrix. 1 tire assembly	141 LB		$447.00
		735114006	12x16.5 Heavy Duty (70 OTW) LH Kit Galaxy XD2002 Reference Loader Stop matrix. 1 tire assembly	141 LB		$447.00

Premium Tire Assembly

		735095006	12x16.5 Premium (70 OTW) RH Kit Galaxy Beefy Baby II Reference Loader Stop matrix. 1 tire assembly	152 LB		$546.00
		735115006	12x16.5 Premium (70 OTW) LH Kit Galaxy Beefy Baby II Reference Loader Stop matrix. 1 tire assembly	152 LB		$546.00
		735102006	14x17.5 Premium (76 OTW) RH Kit Galaxy Beefy Baby II Reference Loader Stop matrix. 1 tire assembly	89 LB		$745.00
		735121006	14x17.5 Premium (76 OTW) LH Kit Galaxy Beefy Baby II Reference Loader Stop matrix. 1 tire assembly	89 LB		$745.00

Premium-Liner Tire Assembly

		735096006	12x16.5 Premium-Liner (70 OTW) RH Kit Galaxy Beefy Baby II Reference Loader Stop matrix. 1 tire assembly	152 LB		$680.00
		735116006	12x16.5 Premium-Liner (70 OTW) LH Kit Galaxy Beefy Baby II Reference Loader Stop matrix. 1 tire assembly	152 LB		$680.00

Non-Pneumatic Tire Assembly

		735119006	12x16.5 Non-Pneumatic (70 OTW) RH Kit Solid Flex Reference Loader Stop matrix. 1 tire assembly	301 LB		$1,274.00
		735099006	12x16.5 Non-Pneumatic (70 OTW) LH Kit Solid Flex Reference Loader Stop matrix. 1 tire assembly	301 LB		$1,274.00

Severe Duty Tire Assembly

		735097006	12x16.5 Severe Duty (70 OTW) RH Kit Galaxy Hulk Reference Loader Stop matrix. 1 tire assembly	168 LB		$691.00
		735117006	12x16.5 Severe Duty (70 OTW) LH Kit Galaxy Hulk Reference Loader Stop matrix. 1 tire assembly	168 LB		$691.00

Mining Tire Assembly

		735098006	12x16.5 Mining (70 OTW) RH Kit Galaxy King Kong Reference Loader Stop matrix. 1 tire assembly	439 LB		$656.00
		735118006	12x16.5 Mining (70 OTW) LH Kit Galaxy King Kong Reference Loader Stop matrix. 1 tire assembly	439 LB		$656.00

SV250 T4 INTERIM SKID STEER LOADER
US PRICE LIST

(Ex Works Wichita, KS)

Flotation Tire Assembly

		735100006	33x15.5 Flotation (76 OTW) RH Kit Galaxy Hippo Reference Loader Stop matrix. 1 tire assembly	178 LB		$748.00
		735120006	33x15.5 Flotation (76 OTW) LH Kit Galaxy Hippo Reference Loader Stop matrix. 1 tire assembly	178 LB		$748.00

SV280 T4 FINAL SKID STEER LOADER
US PRICE LIST

(Ex Works Wichita, KS)

Standard Equipment

ENGINE:
- FPT F5H FL463H water cooled diesel engine
- 207 CID (3.4 L) Turbo
- Tier 4 Final Certified
- Particulate Matter Catalyst
- High Pressure Common Rail (HPCR) Fuel Injection
- Charged Air Cooler (CAC)
- Horsepower:
  - Gross 74
  - Net 68
  - Peak torque 232 lb•ft (314 N•m)
- 120 amp alternator
- Air cleaner - dual element
- Organic Acid Technology (OAT) Anti-freeze solution to -34º F
- Fuel tank - 25.5 gal. (U.S.)
- 3-stack after cooler/radiator/ oil cooler configuration
- Maintenance-Free Belt
- Glow Plugs
- Maintenance free 1000 CCA battery with master electrical disconnect
- Enclosed Cab with Heater and AC
- Control lockout system

OPERATOR'S PROTECTIVE STRUCTURE:
- Tilt forward ROPS/FOPS
- Electric parking brake control
- Hand throttle
- Foot throttle
- Low effort ergonomic H-Pattern hand controls
- Proportional auxiliary hydraulic control
- Operator's compartment floor cleanout
- Rear window with emergency escape
- Padded seat bar with integral arm rests
- Air Ride Suspsension Seat with 2" retractable lap seat belt
- Foot rest
- Dome Light

OPERATOR'S PROTECTIVE STRUCTURE (Continued):
- 12V Power plug socket
- Cup holder
- Tool Pocket
- Top window
- Headliner
- Alarm package (backup and horn)

OTHER STANDARD FEATURES:
- Lights - 2 front, 2 side, 2 rear flood (halogen)
- Heavy Duty Front Lights
- Pre-wired for rotating beacon
- Service access hood, lockable
- Single point daily service
- Tail lights
- Remote oil drain
- Remote Oil and Fuel Filters
- Block heater
- Debris Ingression Prevention Sealing

INSTRUMENTATION:
- Advanced Instrument Cluster with
  - Hour meter
  - Tachometer
  - Fuel guage,
  - Hydraulic oil temperature gauge,
  - Engine coolant temperature guage
  - Diagnostic features
  - Security lock-out
- Warning lights with alarms:
  - Critical system stop
  - Engine system
  - Hydraulic system
  - Electrical and diagnostic system
- Warning alarms:
  - Battery voltage (plus display)
  - Diesel particulate filter (DPF)
  - Oil Service
- Indicator Light:
  - Engine preheat
  - Parking brake
  - Seat bar reminder

SV280 T4 FINAL SKID STEER LOADER
US PRICE LIST

(Ex Works Wichita, KS)

Standard Equipment

DRIVE:
- Servo assist, two-speed hydrostatic four wheel drive
- Spring applied hydraulic release (SAHR) disc parking brake
- Dynamic braking
- ASA #100 drive chain

HYDRAULICS:
- 6 micron oil filtration system
- 3 spool loader control valve
- Auxiliary hydraulics, Proportional thumb wheel activated: loader arm mounted with ISO specification flat face "connect-under-pressure" disconnects
  Including case drain
- Heavy duty hydraulic oil cooler
- Loader arm float position
- Auxiliary hydraulic function lockout override
- Loader arm circuit lockout override
- Self Level
- Ride Control

LOADER:
- Heavy Duty Hydraulic attachment coupler
- Vertical Lift geometry
- In-CAB Loader Lock
- SAE operating load: 2800 lbs.
- Tipping load: 5600 lbs.

TIRES
- 12 X 16.5 Heavy Duty - 70 inch
- Over-the-Tire Width (OTW)
- Galaxy XD2002

SV280 T4 FINAL SKID STEER LOADER
US PRICE LIST

(Ex Works Wichita, KS)

Models

COMMERCIAL MODEL	Weight	Factory Data	List Price
SV280 T4 FINAL	8,090 LB		$60,051.00

SV280 T4 FINAL SKID STEER LOADER
US PRICE LIST

(Ex Works Wichita, KS)

Factory Supplied Options

Order Code	Description	Weight	Factory Data	List Price

CONTROLS AND TRANSMISSION

SD_01100 CONTROLS LEVEL

		761029	2 Speed Mechanical Controls			No Charge
		761031	2 Speed E-H Controls **Electro-Hydraulic Switchable (ISO-H Pattern) Controls with Two Speed**			$2,245.00

SD_01401 DRIVE CONTROL TYPE

		761040	Hand Controls (H-Pattern)			No Charge
		761042	E-H Controls			No Charge

ROPS/CAB

SD_05009 CAB

		761043	Open Cab (No Heat or HVAC) **with top window and keyed start**			($5,700.00)
		761046	Enclosed Cab with Heater **Includes side windows, front glass door with wiper, shoulder belt, radio with speakers and keyless start**			($1,500.00)
		761045	Enclosed Cab with Heater & AC **Includes side windows, front glass door with wiper, shoulder belt, radio with speakers and keyless start**			No Charge
		761184	Enclosed Cab w/Heat -Demo Door **Includes side windows, 1/2" polycarbonate front door with wiper, shoulder belt, radio with speakers and keyless start**			$314.00
		761183	Enclosed Cab w/HVAC -Demo Door **Includes side windows, 1/2" polycarbonate front door with wiper, shoulder belt, radio with speakers and keyless start**			$1,908.00

SD_05016 OPEN CAB TRIM

		X05016X	No Open Cab Interior Trim Pkg			No Charge
		761186	Open Cab Interior Trim Package **For use wtih Open Cab. Covers interior sides and rear.**			$330.00

SD_05185 CAB SEAT

		761050	Non Suspension Seat			($974.00)
		761052	Suspension Seat (Vinyl)			($624.00)

SV280 T4 FINAL SKID STEER LOADER
US PRICE LIST

(Ex Works Wichita, KS)

		761062	Air Ride Suspension Seat **(Fabric) with temperature control** **(may not be ordered with Open Cab option 761043)**			No Charge

SD_K6480 HEAVY DUTY FRONT LIGHTS

		XK6480X	No Heavy Duty Front Lights			($100.00)
		761201	Heavy Duty Front Lights			No Charge

REAR DOOR

SD_39021 REAR DOOR

		761075	Rear Door			No Charge
		761205	Heavy Duty Rear Door			$471.00

COUPLER

SD_K5101 COUPLERS

		726003	Manual Coupler			($1,100.00)
		761206	Heavy Duty Hydraulic Coupler			No Charge

BLOCK HEATER

SD_02086 BLOCK HEATER

		X02086X	No Block Heater			($125.00)
		761048	Block Heater (120V)			No Charge

OPERATOR MANUALS

SD_32035 LANGUAGE OPTIONS

		761085	English USA			No Charge
		761088	French Canadian			No Charge
		761097	Spanish Latin American			No Charge

OPTIONAL PACKAGES

SD_01201 OPTION PACKAGES

		761032	Standard Equipment Only			($950.00)
		761034	Front Electric/Multi-Function **Contains Front Electric (Multi-Function) for Standard Auxiliaries**			($587.00)
		761033	Performance Package **Contains ON/OFF One-Way Self Leveling and Ride Control**			No Charge

SV280 T4 FINAL SKID STEER LOADER
US PRICE LIST

(Ex Works Wichita, KS)

		761035	Performance w/Front Electric **Contains ON/OFF One-Way Self Leveling, Ride Control and Front Electric**			$669.00
		761036	High Flow Package **Contains High Flow Hydraulics with Front Electric**			$1,421.00
		761037	High Flow Plus Package **Contains Front Electric, High Flow Hydraulics, ON/OFF One-Way Self Leveling and Ride Control**			$2,678.00

TIRES

SD_16068 TIRE OPTIONS

		8503107	12x16.5 Heavy Duty (70 OTW) **10PR Stamped Center - Galaxy XD2002**			No Charge
		8503207	12x16.5 Premium (70 OTW) **10PR Stamped Center - Galaxy Beefy Baby II**			$221.00
		8503307	12x16.5 Premium-Liner (70 OTW) **10PR Stamped Center - Galaxy Beefy Baby II**			$391.00
		8503407	12x16.5 Severe Duty (70 OTW) **12PR Welded Plate Center - Galaxy Hulk**			$536.00
		8503507	12x16.5 Mining (70 OTW) **12PR Welded Plate Center - Galaxy King Kong**			$639.00
		8503607	12x16.5 Non-Pneumatic (70 OTW) **Welded Plate Center - Solid Flex**			$3,152.00
		8505007	33X15.5 Flotation (76 OTW) **12PR Welded Plate Center - Galaxy Hippo**			$371.00
		8505107	14x17.5 Premium (76 OTW) **may not be used for over-the-wheel tracks** **10PR Welded Plate Center - Galaxy Beefy Baby II**			$536.00

FRONT ATTACHMENTS

BUCKETS

SD_K5231 BUCKETS

		XK5231X	No Bucket			No Charge
Dirt & Foundry Bucket						
		761125	72" Dirt & Foundry Bucket **(1829 mm), 16.7 cu. ft. Heaped Capacity**			$1,071.00
		761126	78" Dirt & Foundry Bucket **(1981 mm), 18.4 cu. ft. Heaped Capacity**			$1,112.00
Heavy Duty Dirt Bucket						
		761142	72" Heavy Duty Dirt Bucket **(1829 mm), 14.6 cu. ft. Heaped Capacity**			$1,329.00
		761143	78" Heavy Duty Dirt Bucket **(1981 mm), 15.9 cu. ft. Heaped Capacity**			$1,442.00

SV280 T4 FINAL SKID STEER LOADER
US PRICE LIST

(Ex Works Wichita, KS)

		761144	84" Heavy Duty Dirt Bucket **(2134 mm), 19.4 cu. ft. Heaped Capacity**			$1,550.00
Light Material Bucket						
		761136	72" Light Material Bucket **(1829 mm), 14.5 cu. ft. Heaped Capacity**			$901.00
		761137	84" Light Material Bucket **(2134 mm), 27.9 cu. ft. Heaped Capacity**			$1,051.00
Low Profile Bucket						
		761129	72" Low Profile Bucket **(1829 mm), 14.5 cu. ft. Heaped Capacity**			$968.00
Low Profile Extended Bucket						
		761132	72" Low Profile Extended **(1829 mm), 17.1 cu. ft. Heaped Capacity**			$1,076.00
		761133	78" Low Profile Extended **(1981 mm), 18.6 cu. ft. Heaped Capacity**			$1,164.00
		761134	84" Low Profile Extended **(2134 mm), 20.2 cu. ft. Heaped Capacity**			$1,257.00
Manure & Slurry Bucket						
		761139	72" Manure-Slurry Bucket **(1829 mm), 19.1 cu. ft. Heaped Capacity**			$917.00
		761140	84" Manure-Slurry Bucket **(2134 mm), 22.5 cu. ft. Heaped Capacity**			$1,066.00

SPILL GUARDS

SD_K5400 SPILL GUARDS

		XK5400X	No Spill Guard			No Charge
		761177	72" Spill Guard **For use with Heavy Duty Buckets only**			$216.00
		761178	78" Spill Guard **For use with Heavy Duty Buckets only**			$237.00
		761179	84" Spill Guard **For use with Heavy Duty Buckets only**			$252.00

BOLT ON CUTTING EDGES

SD_K6399 BOLT ON CUTTING EDGE

		XK6399X	No Bolt on Cutting Edge			No Charge
		761147	72" Bolt on Cutting Edge			$258.00
		761148	78" Bolt on Cutting Edge			$278.00
		761149	84" Bolt on Cutting Edge			$299.00

MOVE TO BIC

SD_K6440 OFF-SITE SERVICE

		XK6440X	No Offsite Service Arrangement			No Charge

SV280 T4 FINAL SKID STEER LOADER
US PRICE LIST

(Ex Works Wichita, KS)

		761175	Offsite Service Arrangement			No Charge

SPECIAL PAINT

SD_50103 SPECIAL PAINT

		X50103X	No Special Paint			No Charge
		726029	Special Paint **The price listed is for a color change only from the standard factory color: CNH #86609760 (MS42-Tan). All Special Color formulations will be applied using approved factory processes and materials. Metallic or other special formulations and/or materials are not available. A color chip must be provided to CNH for non CNH colors. A minimum lead time of 8 business weeks will be required prior to production. Unless specified, regular production decals will be applied. Requests can be made that decals not be applied. However, SAFETY decals MUST BE APPLIED in all cases. The following components remain CNH grey: lift & bucket cylinders, front coupler and attachments, ROPS, side screens, rear hood, upper chassis and control links.**			$3,213.00

TELEMATICS

SD_K6450 TELEMATICS

		XK6450X	No Telematics			No Charge
		761187	CASE SiteWatch Telematics			$874.00

SV280 T4 FINAL SKID STEER LOADER
US PRICE LIST

(Ex Works Wichita, KS)

Factory Supplied Attachments

Order Code			Description	Weight	Factory Data	List Price
Basic Attachments						
		735030006	Demo Rear Door Insert	32 LB		$330.00
		735006006	Beacon Kit	1 LB		$165.00
		735007006	4-Corner LED Strobe Kit Must order connector. Reference dependency matrix.	24 LB		$536.00
		735159026	Heater Complete For use with Tier 3 Must order applicable harness. Reference dependency matrix.	137 LB		$1,472.00
		735159046	Heater Complete For use with SR220 Tier 4 Interim, SR240 Tier 4 Final, SR250 Tier 4 Interim, SV250 Tier 4 Interim, SV280 Tier 4 Final and SV300 Tier 4 Inteirm Must order applicable harness. Reference dependency matrix.	141 LB		$1,472.00
		735158066	HVAC Complete For use with SV250 Tier 3 and SV300 Tier 3 Must order applicable harness. Reference dependency matrix.	383 LB		$3,162.00
		735158156	HVAC Complete For use with SV250 Tier 4 Interim and SV300 Tier 4 Interim Must order applicable harness. Reference dependency matrix.	381 LB		$3,162.00
		735158186	HVAC Complete For use with SV280 Tier 4 Final Must order applicable harness. Reference dependency matrix.	381 LB		$3,162.00
		735146006	Three Point Seat Belt	4 LB		$250.00
		735011006	Glass Front Door Kit Center mounted wiper Requires three point seat belt. Must order applicable harness. Reference dependency matrix.	182 LB		$1,653.00
		735012006	Demo Front Door Kit Center mounted wiper Requires three point seat belt. Must order applicable harness. Reference dependency matrix.	182 LB		$2,905.00
		735013006	Cab Side Windows Kit	139 LB		$927.00
		735016006	Radio Kit Must order applicable harness. Reference dependency matrix.	16 LB		$443.00
		735150006	Open Cab Interior Trim Kit For use with Open Cab. Covers interior sides and rear.	20 LB		$399.00
		735020026	Road Light Kit For use with SV250 Tier 3 and Tier 4 Interim, SV280 Tier 4 Final and SV300 Tier 3 and Tier 4 Interim Must order applicable harness. Reference dependency matrix.	111 LB		$649.00
		735124006	Side Lamp Kit	6 LB		$272.00
		735021016	Multi-Function Front Electrical Mech Kit For use with SV250 Tier 3 and Tier 4 Interim, SV280 Tier 4 Final and SV300 Tier 3 and Tier 4 Interim Must order applicable handle. Reference dependency matrix.	11 LB		$294.00
		735125016	Multi-Function Front Electrical E-H Kit For use with SV250 Tier 3 and Tier 4 Interim, SV280 Tier 4 Final and SV300 Tier 3 and Tier 4 Interim	11 LB		$294.00
		735022016	One Way Self Level Kit	14 LB		$520.00

SV280 T4 FINAL SKID STEER LOADER
US PRICE LIST

(Ex Works Wichita, KS)

		735023006	Ride Control Kit Must order applicable handle. Reference dependency martix.	33 LB		$515.00
		735024016	Hydraulic Coupler Kit Must order applicable harness. Reference dependency matrix.	159 LB		$1,324.00
		735025026	High Flow Auxiliary Kit For use with SV250 Tier 3 and SV300 Tier 3 Must order applicable harness. Reference dependency matrix.	193 LB		$2,699.00
		735025066	High Flow Auxiliary Kit For use with SV250 Tier 4 Interim, SV280 Tier 4 Final and SV300 Tier 4 Interim Must order applicable harness. Reference dependency matrix.	191 LB		$2,699.00
		735027026	Second Hydraulic Front Auxiliary Kit For use with SV250 Tier 3 and Tier 4 Interim, SV280 Tier 4 Final and SV300 Tier 3 and Tier 4 Interim Must order applicable handle. Reference dependency matrix.	86 LB		$1,103.00
		735036026	4-Point Lift Hook Kit For use with SR220 Tier 3 and Tier 4 Interim, SR240 T4 Final, SR250 Tier 3 and Tier 4 Interim, SV250 Tier 3 and Tier 4 Interim, SV280 Tier 4 Final and SV300 Tier 4 Interim	10 LB		$238.00
		735037046	Single Point Lift Hook Kit	269 LB		$1,102.00
		735038006	FOPS Level 2 Modification Kit	61 LB		$368.00
		735039026	Extra Counterweight Kit	362 LB		$736.00
		735040036	Aspirator Kit For use with SV250 Tier 3 and SV300 Tier 3	13 LB		$340.00
		735040066	Aspirator Kit For use with SV250 T4 Interim, SV280 T4 Final and SV300 T4 Interim	15 LB		$340.00
		735042006	Interior Mirror Kit	4 LB		$62.00
		735045006	Foot Control Conversion Kit For use with Tier 3	54 LB		$659.00
		735045046	Foot Control Conversion Kit Not available for units equipped with Electro Hydraulic (EH) controls.	52 LB		$659.00
		735046056	Hand Control Conversion Kit For use with units built PRIOR to S/N NDM461595 (SR220 Tier 4 Interim), NDM443253 (SR250 Tier 4 Interim), NDM469210 (SV250 Tier 4 Interim) and NDM460105 (SV300 Tier 4 Interim)	77 LB		$883.00
		735046066	Hand Control Conversion Kit For use with units built AFTER S/N NDM461595 (SR220 Tier 4 Interim and Final), NDM443253 (SR250 Tier 4 Interim and Final), NDM469210 (SV250 Tier 4 Interim and Final) and NDM460105 (SV300 Tier 4 Interim and Final)	76 LB		$883.00
		735047006	120V Block Heater Kit	6 LB		$221.00
		735048006	220V Block Heater Kit	6 LB		$221.00
		735142006	Cylinder Guard Kit	21 LB		$792.00
		735151066	Debris Seal Kit For use with SV250 Tier 3 and Tier 4 Interim, SV280 Tier 4 Final and SV300 Tier 3 and Tier 4 Interim Reduces debris ingression to engine compartment and chassis	17 LB		$283.00
		735161016	Heavy Duty Front Lights - Vertical Model For use with SV250 T4 Interim, SV280 T4 Final and SV300 T4 Interim	26 LB		$429.00

SV280 T4 FINAL SKID STEER LOADER
US PRICE LIST

(Ex Works Wichita, KS)

		735163006	Heavy Duty Rear Door For use with SR220 T4 Interim, SR240 T4 Final, SR250 T4 Interim, SV250 T4 Interim, SV280 T4 Final and SV300 T4 Interim	140 LB		$769.00

Handles - E-H Models

		735126006	LH EH Handle Kit (NO 2nd Aux) Adds Front Electric.	2 LB		$191.00
		735127006	RH EH Handle Kit Adds Front Electric.	2 LB		$191.00
		735132006	LH EH Handle Kit (WITH 2nd Aux) Adds Second Auxiliary with Front Electric.	2 LB		$191.00

Handles - Mechanical Models

		735134006	LH Mechanical Handle Kit (NO 2nd Aux) Adds Front Electric.	2 LB		$191.00
		735135006	LH Mechanical Handle Kit (WITH 2nd Aux) Adds Second Auxiliary with Front Electric.	2 LB		$191.00
		735136006	RH Mechanical Handle Kit Adds Front Electric.	2 LB		$191.00

Pallet Fork

		735075006	Pallet Fork Frame w/48" Tines	540 LB		$1,355.00

Dirt & Foundry Bucket

		735055016	72" Dirt & Foundry Bucket (1829 mm), 16.7 cu. ft. Heaped Capacity	407 LB		$1,071.00
		735056016	78" Dirt & Foundry Bucket (1981 mm), 18.4 cu. ft. Heaped Capacity	429 LB		$1,112.00

Low Profile Bucket

		735059016	72" Low Profile Bucket (1829 mm), 14.5 cu. ft. Heaped Capacity	471 LB		$968.00

Low Profile Extended Bucket

		735062016	72" Low Profile Extended Bucket (1829 mm), 17.1 cu. ft. Heaped Capacity	504 LB		$1,076.00
		735063016	78" Low Profile Extended Bucket (1981 mm), 18.6 cu. ft. Heaped Capacity	531 LB		$1,164.00
		735064016	84" Low Profile Extended Bucket (2134 mm), 20.2 cu. ft. Heaped Capacity	607 LB		$1,257.00

Light Material Bucket

		735066016	72" Light Material Bucket (1829 mm), 23.7 cu. ft. Heaped Capacity	466 LB		$901.00
		735067016	84" Light Material Bucket (2134 mm), 27.9 cu. ft. Heaped Capacity	532 LB		$1,051.00

Manure & Slurry Bucket

		735069016	72" Manure-Slurry Bucket (1829 mm), 19.1 cu. ft. Heaped Capacity	469 LB		$917.00
		735070016	84" Manure-Slurry Bucket (2134 mm), 22.5 cu. ft. Heaped Capacity	535 LB		$1,066.00

SV280 T4 FINAL SKID STEER LOADER
US PRICE LIST

(Ex Works Wichita, KS)

Heavy Duty Dirt Bucket

		735072016	72" Heavy Duty Dirt Bucket (1829 mm), 14.6 cu. ft. Heaped Capacity	501 LB		$1,329.00
		735073016	78" Heavy Duty Dirt Bucket (1981 mm), 15.9 cu. ft. Heaped Capacity	526 LB		$1,442.00
		735074016	84" Heavy Duty Dirt Bucket (2134 mm), 19.4 cu. ft. Heaped Capacity	550 LB		$1,550.00

Heavy Duty Tire Assembly

		735094006	12x16.5 Heavy Duty (70 OTW) RH Kit Galaxy XD2002 Reference Loader Stop matrix. 1 tire assembly	141 LB		$447.00
		735114006	12x16.5 Heavy Duty (70 OTW) LH Kit Galaxy XD2002 Reference Loader Stop matrix. 1 tire assembly	141 LB		$447.00

Premium Tire Assembly

		735095006	12x16.5 Premium (70 OTW) RH Kit Galaxy Beefy Baby II Reference Loader Stop matrix. 1 tire assembly	152 LB		$546.00
		735115006	12x16.5 Premium (70 OTW) LH Kit Galaxy Beefy Baby II Reference Loader Stop matrix. 1 tire assembly	152 LB		$546.00
		735102006	14x17.5 Premium (76 OTW) RH Kit Galaxy Beefy Baby II Reference Loader Stop matrix. 1 tire assembly	89 LB		$745.00
		735121006	14x17.5 Premium (76 OTW) LH Kit Galaxy Beefy Baby II Reference Loader Stop matrix. 1 tire assembly	89 LB		$745.00

Non-Pneumatic Tire Assembly

		735119006	12x16.5 Non-Pneumatic (70 OTW) RH Kit Solid Flex Reference Loader Stop matrix. 1 tire assembly	301 LB		$1,274.00
		735099006	12x16.5 Non-Pneumatic (70 OTW) LH Kit Solid Flex Reference Loader Stop matrix. 1 tire assembly	301 LB		$1,274.00

Premium-Liner Tire Assembly

		735096006	12x16.5 Premium-Liner (70 OTW) RH Kit Galaxy Beefy Baby II Reference Loader Stop matrix. 1 tire assembly	152 LB		$680.00
		735116006	12x16.5 Premium-Liner (70 OTW) LH Kit Galaxy Beefy Baby II Reference Loader Stop matrix. 1 tire assembly	152 LB		$680.00

Severe Duty Tire Assembly

		735097006	12x16.5 Severe Duty (70 OTW) RH Kit Galaxy Hulk Reference Loader Stop matrix. 1 tire assembly	168 LB		$691.00
		735117006	12x16.5 Severe Duty (70 OTW) LH Kit Galaxy Hulk Reference Loader Stop matrix. 1 tire assembly	168 LB		$691.00

SV280 T4 FINAL SKID STEER LOADER
US PRICE LIST

(Ex Works Wichita, KS)

Mining Tire Assembly

		735098006	12x16.5 Mining (70 OTW) RH Kit Galaxy King Kong Reference Loader Stop matrix. 1 tire assembly	439 LB		$656.00
		735118006	12x16.5 Mining (70 OTW) LH Kit Galaxy King Kong Reference Loader Stop matrix. 1 tire assembly	439 LB		$656.00

Flotation Tire Assembly

		735100006	33x15.5 Flotation (76 OTW) RH Kit Galaxy Hippo Reference Loader Stop matrix. 1 tire assembly	178 LB		$748.00
		735120006	33x15.5 Flotation (76 OTW) LH Kit Galaxy Hippo Reference Loader Stop matrix. 1 tire assembly	178 LB		$748.00

SV300 T4 INTERIM SKID STEER LOADER
US PRICE LIST

(Ex Works Wichita, KS)

Standard Equipment

ENGINE:
- FPT F5HFL413L water-cooled diesel engine
- 207 CID (3.4L) Turbo
- Tier 4 Interim Certified
- High Pressure Common Rail (HPCR) Fuel Injection
- Charged Air Cooler (CAC)
- Diesel Particulate Filter (DPF)
- Horsepower:
  - Gross 90
  - Net 84
  - Peak torque 282 lb•ft (383 N•m)
- 120 amp alternator
- Air cleaner - dual element
- Anti-freeze solution to -34° F
- Fuel tank - 25.5 gal. (US)
- 3-stack after cooler/radiator/ oil cooler configuration
- Glow Plugs
- Maintenance free 1000 CCA battery with master electrical disconnect

OPERATOR'S PROTECTIVE STRUCTURE:
- Enclosed Cab with Heater and AC
- Control lockout system
- Tilt forward ROPS/FOPS
- Electric parking brake control
- Hand throttle
- Foot throttle
- 2 Speed Low effort servo-assist H-Pattern hand controls
- Proportional auxiliary hydraulic control
- Operator's compartment floor cleanout
- Rear window with emergency escape
- Padded seat bar with integral arm rests
- Air Suspension Seat, with 2" retractable lap seat belt
- Foot rest
- Dome Light
- 12V Power plug socket
- Cup holder

OPERATOR'S PROTECTIVE STRUCTURE (Continued):
- Tool Pocket
- Top window
- Headliner
- Alarm package (backup and horn)

OTHER STANDARD FEATURES:
- Lights - 2 front, 2 side, 2 rear flood (halogen)
- Heavy Duty Front Lights
- Pre-wired for rotating beacon
- Service access hood, lockable
- Single point daily service
- Tail lights
- Remote oil drain
- Remote oil and fuel filters
- Block Heater
- Debris Ingression Sealing

INSTRUMENTATION:
- Advanced Instrument Cluster with
  - Hour meter
  - Tachometer
  - Fuel gauge
  - Hydraulic oil temperature gauge
  - Engine coolant temperature gauge
  - Diagnostic features
  - Security lock-out
- Warning lights with alarms:
  - Critical system stop
  - Engine system
  - Hydraulic system
  - Electrical and diagnostic system
- Warning alarms:
  - Battery voltage (plus display)
  - Diesel particulate filter (DPF)
  - Oil Service
- Indicator Light:
  - Engine preheat, Parking brake, Seat bar reminder

SV300 T4 INTERIM SKID STEER LOADER
US PRICE LIST

(Ex Works Wichita, KS)

Standard Equipment

DRIVE:
- Servo assist, two-speed hydrostatic four wheel drive
- Spring applied hydraulic release (SAHR) disc parking brake
- Dynamic braking
- ASA #100 drive chain

HYDRAULICS:
- 6 micron oil filtration system
- 3 spool loader control valve
- Auxiliary hydraulics, proportional thumb wheel activated: loader arm mounted with ISO specification flat face "connect-under-pressure" disconnects including case drain
- Heavy duty hydraulic oil cooler
- Loader arm float position
- Auxiliary hydraulic function lockout override
- Loader arm circuit lockout override
- Self Level
- Ride Control

LOADER:
- Heavy Duty Hydraulic attachment coupler
- Vertical Lift geometry
- In-cab Loader Lock
- SAE operating load: 3000 lbs.
- Tipping load: 6000 lbs.

TIRES
- 12 X 16.5 Heavy Duty - 70 inch
- Over-the-Tire Width (OTW)
- Galaxy XD2002

SV300 T4 INTERIM SKID STEER LOADER
US PRICE LIST

(Ex Works Wichita, KS)

Models

COMMERCIAL MODEL	Weight	Factory Data	List Price
SV300-T4 INTERIM	7,565 LB		$67,575.00

SV300 T4 INTERIM SKID STEER LOADER
US PRICE LIST

(Ex Works Wichita, KS)

Factory Supplied Options

Order Code	Description	Weight	Factory Data	List Price

CONTROLS AND TRANSMISSION

SD_01401 DRIVE CONTROL TYPE

		761040	Hand Controls (H-Pattern)			No Charge
		761042	E-H Controls			No Charge

SD_01100 CONTROLS LEVEL

		761029	2 Speed Mechanical Controls			No Charge
		761031	2 Speed E-H Controls **Electro-Hydraulic Switchable (ISO-H Pattern) Controls with Two Speed**			$2,245.00

ROPS/CAB

SD_05009 CAB

		761043	Open Cab (No Heat or HVAC) **with top window and keyed start**			($5,700.00)
		761046	Enclosed Cab with Heater **Includes side windows, front glass door with wiper, shoulder belt, radio with speakers and keyless start**			($1,500.00)
		761045	Enclosed Cab with Heater & AC **Includes side windows, front glass door with wiper, shoulder belt, radio with speakers and keyless start**			No Charge
		761184	Enclosed Cab w/Heat -Demo Door **Includes side windows, 1/2" polycarbonate front door with wiper, shoulder belt, radio with speakers and keyless start**			$314.00
		761183	Enclosed Cab w/HVAC -Demo Door **Includes side windows, 1/2" polycarbonate front door with wiper, shoulder belt, radio with speakers and keyless start**			$1,908.00

SD_05016 OPEN CAB TRIM

		X05016X	No Open Cab Interior Trim Pkg			No Charge
		761186	Open Cab Interior Trim Package **For use with Open Cab. Covers interior sides and rear.**			$330.00

SD_05185 CAB SEAT

		761050	Non Suspension Seat			($974.00)
		761052	Suspension Seat (Vinyl)			($624.00)

SV300 T4 INTERIM SKID STEER LOADER
US PRICE LIST

(Ex Works Wichita, KS)

		761062	Air Ride Suspension Seat **(Fabric) with temperature control (may not be ordered with Open Cab option 761043)**			No Charge

SD_K6480 HEAVY DUTY FRONT LIGHTS

		XK6480X	No Heavy Duty Front Lights			($100.00)
		761201	Heavy Duty Front Lights			No Charge

REAR DOOR

SD_39021 REAR DOOR

		761075	Rear Door			No Charge
		761205	Heavy Duty Rear Door			$471.00

COUPLER

SD_K5101 COUPLERS

		726003	Manual Coupler			($1,100.00)
		761206	Heavy Duty Hydraulic Coupler			No Charge

BLOCK HEATER

SD_02086 BLOCK HEATER

		X02086X	No Block Heater			($125.00)
		761048	Block Heater (120V)			No Charge

OPERATOR MANUALS

SD_32035 LANGUAGE OPTIONS

		761085	English USA			No Charge
		761088	French Canadian			No Charge
		761097	Spanish Latin American			No Charge

OPTIONAL PACKAGES

SD_01201 OPTION PACKAGES

		761032	Standard Equipment Only			($950.00)
		761034	Front Electric/Multi-Function **Contains Front Electric (Multi-Function) for Standard Auxiliaries**			($587.00)
		761033	Performance Package **Contains ON/OFF One-Way Self Leveling and Ride Control**			No Charge

SV300 T4 INTERIM SKID STEER LOADER
US PRICE LIST

(Ex Works Wichita, KS)

		761035	Performance w/Front Electric **Contains ON/OFF One-Way Self Leveling, Ride Control and Front Electric**			$669.00
		761036	High Flow Package **Contains High Flow Hydraulics with Front Electric**			$1,421.00
		761037	High Flow Plus Package **Contains Front Electric, High Flow Hydraulics, ON/OFF One-way Self Leveling and Ride Control**			$2,678.00
		761039	Enhanced High Flow Package **Only available with units equipped with EH Controls. Contains 4000 PSI High Flow Hydraulics, Second Auxiliaries, Front Electric, High Flow Hydraulics, ON/OFF One-way Self Leveling and Ride Control**			$6,181.00

TIRES

SD_16068 TIRE OPTIONS

		8503107	12x16.5 Heavy Duty (70 OTW) **10PR Stamped Center - Galaxy XD2002**			No Charge
		8503207	12x16.5 Premium (70 OTW) **10PR Welded Plate Center - Galaxy Beefy Baby II**			$221.00
		8503307	12x16.5 Premium-Liner (70 OTW) **10PR Welded Plate Center - Galaxy Beefy Baby II**			$391.00
		8503407	12x16.5 Severe Duty (70 OTW) **12PR Welded Plate Center - Galaxy Hulk**			$536.00
		8503507	12x16.5 Mining (70 OTW) **12PR Welded Plate Center - Galaxy King Kong**			$639.00
		8503607	12x16.5 Non-Pneumatic (70 OTW) **Welded Plate Center - Solid Flex**			$3,152.00
		8505007	33X15.5 Flotation (76 OTW) **12PR Welded Plate Center - Galaxy Hippo**			$371.00
		8505107	14x17.5 Premium (76 OTW) **may not be used for over-the-wheel tracks** **10PR Welded Plate Center - Galaxy Beefy Baby II**			$536.00

FRONT ATTACHMENTS

BUCKETS

SD_K5231 BUCKETS

		XK5231X	No Bucket			No Charge
Dirt & Foundry Bucket						
		761125	72" Dirt & Foundry Bucket **(1829 mm), 16.7 cu. ft. Heaped Capacity**			$1,071.00
		761126	78" Dirt & Foundry Bucket **(1981 mm), 18.4 cu. ft. Heaped Capacity**			$1,112.00

SV300 T4 INTERIM SKID STEER LOADER
US PRICE LIST

(Ex Works Wichita, KS)

Heavy Duty Dirt Bucket						
		761142	72" Heavy Duty Dirt Bucket **(1829 mm), 14.6 cu. ft. Heaped Capacity**			$1,329.00
		761143	78" Heavy Duty Dirt Bucket **(1981 mm), 15.9 cu. ft. Heaped Capacity**			$1,442.00
		761144	84" Heavy Duty Dirt Bucket **(2134 mm), 19.4 cu. ft. Heaped Capacity**			$1,550.00
Light Material Bucket						
		761136	72" Light Material Bucket **(1829 mm), 23.7 cu. ft. Heaped Capacity**			$901.00
		761137	84" Light Material Bucket **(2134 mm), 27.9 cu. ft. Heaped Capacity**			$1,051.00
Low Profile Buckets						
		761129	72" Low Profile Bucket **(1829 mm), 14.5 cu. ft. Heaped Capacity**			$968.00
Low Profile Extended Bucket						
		761132	72" Low Profile Extended **(1829 mm), 17.1 cu. ft. Heaped Capacity**			$1,076.00
		761133	78" Low Profile Extended **(1981 mm), 18.6 cu. ft. Heaped Capacity**			$1,164.00
		761134	84" Low Profile Extended **(2134 mm), 20.2 cu. ft. Heaped Capacity**			$1,257.00
Manure & Slurry Bucket						
		761139	72" Manure-Slurry Bucket **(1829 mm), 19.1 cu. ft. Heaped Capacity**			$917.00
		761140	84" Manure-Slurry Bucket **(2134 mm), 22.5 cu. ft. Heaped Capacity**			$1,066.00

SPILL GUARDS

SD_K5400 SPILL GUARDS

		XK5400X	No Spill Guard			No Charge
		761177	72" Spill Guard **For use with Heavy Duty Buckets only**			$216.00
		761178	78" Spill Guard **For use with Heavy Duty Buckets only**			$237.00
		761179	84" Spill Guard **For use with Heavy Duty Buckets only**			$252.00

BOLT ON CUTTING EDGES

SD_K6399 BOLT ON CUTTING EDGE

		XK6399X	No Bolt on Cutting Edge			No Charge
		761147	72" Bolt on Cutting Edge			$258.00
		761148	78" Bolt on Cutting Edge			$278.00
		761149	84" Bolt on Cutting Edge			$299.00

SV300 T4 INTERIM SKID STEER LOADER
US PRICE LIST

(Ex Works Wichita, KS)

MOVE TO BIC

SD_K6440 OFF-SITE SERVICE

		XK6440X	No Offsite Service Arrangement			No Charge
		761175	Offsite Service Arrangement			No Charge

SPECIAL PAINT

SD_50103 SPECIAL PAINT

		X50103X	No Special Paint			No Charge
		726029	Special Paint **The price listed is for a color change only from the standard factory color: CNH #86609760 (MS42-Tan). All Special Color formulations will be applied using approved factory processes and materials. Metallic or other special formulations and/or materials are not available. A color chip must be provided to CNH for non CNH colors. A minimum lead time of 8 business weeks will be required prior to production. Unless specified, regular production decals will be applied. Requests can be made that decals not be applied. However, SAFETY decals MUST BE APPLIED in all cases. The following components remain CNH grey: lift & bucket cylinders, front coupler and attachments, ROPS, side screens, rear hood, upper chassis and control links.**			$3,213.00

TELEMATICS

SD_K6450 TELEMATICS

		XK6450X	No Telematics			No Charge
		761187	CASE SiteWatch Telematics			$874.00

SV300 T4 INTERIM SKID STEER LOADER
US PRICE LIST

(Ex Works Wichita, KS)

Factory Supplied Attachments

Order Code			Description	Weight	Factory Data	List Price
Basic Attachments						
		735030006	Demo Rear Door Insert	32 LB		$330.00
		735006006	Beacon Kit	1 LB		$165.00
		735007006	4-Corner LED Strobe Kit Must order connector. Reference dependency matrix.	24 LB		$536.00
		735159026	Heater Complete For use with Tier 3 Must order applicable harness. Reference dependency matrix.	137 LB		$1,472.00
		735159046	Heater Complete For use with Tier 4 Must order applicable harness. Reference dependency matrix.	141 LB		$1,472.00
		735158066	HVAC Complete For use with Tier 3 ONLY Must order applicable harness. Reference dependency matrix.	383 LB		$3,162.00
		735158156	HVAC Complete For use with Tier 4 ONLY Must order applicable harness. Reference dependency matrix.	381 LB		$3,162.00
		735146006	Three Point Seat Belt	4 LB		$250.00
		735011006	Glass Front Door Kit Center mounted wiper Requires three point seat belt. Must order applicable harness. Reference dependency matrix.	182 LB		$1,653.00
		735012006	Demo Front Door Kit Center mounted wiper Requires three point seat belt. Must order applicable harness. Reference dependency matrix.	182 LB		$2,905.00
		735013006	Cab Side Windows Kit	139 LB		$927.00
		735016006	Radio Kit Must order applicable harness. Reference dependency matrix.	16 LB		$443.00
		735150006	Open Cab Interior Trim Kit For use with Open Cab. Covers interior sides and rear.	20 LB		$399.00
		735020026	Road Light Kit Must order applicable harness. Reference dependency matrix.	111 LB		$649.00
		735124006	Side Lamp Kit	6 LB		$272.00
		735021016	Multi-Function Front Electrical Mech Kit For use with SV185 Must order applicable handle. Reference dependency matrix.	11 LB		$294.00
		735125016	Multi-Function Front Electrical E-H Kit For use with SV185 Must order applicable handle. Reference dependency matrix.	11 LB		$294.00
		735022016	One Way Self Level Kit For use with SR175	14 LB		$520.00
		735023006	Ride Control Kit Must order applicable handle. Reference dependency martix.	33 LB		$515.00
		735024016	Hydraulic Coupler Kit For use with SV185 Must order applicable harness. Reference dependency matrix.	159 LB		$1,324.00

SV300 T4 INTERIM SKID STEER LOADER
US PRICE LIST

(Ex Works Wichita, KS)

		735025026	High Flow Auxiliary Kit For use with TIER 3 models ONLY. Must order applicable harness. Reference dependency matrix.	193 LB		$2,699.00
		735025066	High Flow Auxiliary Kit For use with TIER 4 models ONLY. Must order applicable harness. Reference dependency matrix.	191 LB		$2,699.00
		735027026	Second Hydraulic Front Auxiliary Kit Must order applicable handle. Reference dependency matrix.	86 LB		$1,103.00
		735036026	4-Point Lift Hook Kit	10 LB		$238.00
		735037046	Single Point Lift Hook Kit	269 LB		$1,102.00
		735038006	FOPS Level 2 Modification Kit	61 LB		$368.00
		735039026	Extra Counterweight Kit	362 LB		$736.00
		735040066	Aspirator Kit For use with TIER 4 models ONLY.	15 LB		$340.00
		735040036	Aspirator Kit For use with TIER 3 models ONLY.	13 LB		$340.00
		735042006	Interior Mirror Kit	4 LB		$62.00
		735045006	Foot Control Conversion Kit Not available for units equipped with Electro Hydraulic (EH) controls. For use with Tier 3	54 LB		$659.00
		735045046	Foot Control Conversion Kit Not available for units equipped with Electro Hydraulic (EH) controls. For use with Tier 4	52 LB		$659.00
		735046026	Hand Control Conversion Kit For use with Tier 3 models	78 LB		$883.00
		735046056	Hand Control Conversion Kit For use with units built PRIOR to S/N NDM461595 (SR220), NDM443253 (SR250), NDM469210 (SV250) and NDM460105 (SV300)	77 LB		$883.00
		735046066	Hand Control Conversion Kit For use with units built AFTER S/N NDM461595 (SR220), NDM443253 (SR250), NDM469210 (SV250) and NDM460105 (SV300)	76 LB		$883.00
		735047006	120V Block Heater Kit	6 LB		$221.00
		735142006	Cylinder Guard Kit	21 LB		$792.00
		735151066	Debris Seal Kit Reduces debris ingression to engine compartment and chassis For use with models built July 2012 or later	17 LB		$283.00
		735152056	New Hood with Debris Seal Kit Contains new hood and additional sealing items Reduces debris ingression to engine compartment and chassis For use with Tier 3 models built prior to July 2012	109 LB		$901.00
		735161016	Heavy Duty Front Lights - Vertical Model For use with Vertical Models	26 LB		$429.00
		735163006	Heavy Duty Rear Door	140 LB		$769.00

Handles - E-H Models

		735126006	LH EH Handle Kit (NO 2nd Aux) Adds Front Electric on all models except SR130 and SR160	2 LB		$191.00
		735127006	RH EH Handle Kit Adds Front Electric on all models except SR130 and SR160	2 LB		$191.00

SV300 T4 INTERIM SKID STEER LOADER
US PRICE LIST

(Ex Works Wichita, KS)

		735132006	LH EH Handle Kit (WITH 2nd Aux) Adds Second Auxiliary with Front Electric.	2 LB		$191.00

Handles - Mechanical Models

		735134006	LH Mechanical Handle Kit (NO 2nd Aux) Adds Front Electric.	2 LB		$191.00
		735135006	LH Mechanical Handle Kit (WITH 2nd Aux) Adds Second Auxiliary with Front Electric.	2 LB		$191.00
		735136006	RH Mechanical Handle Kit Adds Front Electric.	2 LB		$191.00

Pallet Forks

		735075006	Pallet Fork Frame w/48" Tines	540 LB		$1,355.00

Dirt & Foundry Bucket

		735055016	72" Dirt & Foundry Bucket (1829 mm), 16.7 cu. ft. Heaped Capacity	407 LB		$1,071.00
		735056016	78" Dirt & Foundry Bucket (1981 mm), 18.4 cu. ft. Heaped Capacity	429 LB		$1,112.00

Low Profile Bucket

		735059016	72" Low Profile Bucket (1829 mm), 14.5 cu. ft. Heaped Capacity	471 LB		$968.00

Low Profile Extended Bucket

		735062016	72" Low Profile Extended Bucket (1829 mm), 17.1 cu. ft. Heaped Capacity	504 LB		$1,076.00
		735063016	78" Low Profile Extended Bucket (1981 mm), 18.6 cu. ft. Heaped Capacity	531 LB		$1,164.00
		735064016	84" Low Profile Extended Bucket (2134 mm), 20.2 cu. ft. Heaped Capacity	607 LB		$1,257.00

Light Material Bucket

		735066016	72" Light Material Bucket (1829 mm), 23.7 cu. ft. Heaped Capacity	466 LB		$901.00
		735067016	84" Light Material Bucket (2134 mm), 27.9 cu. ft. Heaped Capacity	532 LB		$1,051.00

Manure & Slurry Bucket

		735069016	72" Manure-Slurry Bucket (1829 mm), 19.1 cu. ft. Heaped Capacity	469 LB		$917.00
		735070016	84" Manure-Slurry Bucket (2134 mm), 22.5 cu. ft. Heaped Capacity	535 LB		$1,066.00

Heavy Duty Dirt Bucket

		735072016	72" Heavy Duty Dirt Bucket (1829 mm), 14.6 cu. ft. Heaped Capacity	501 LB		$1,329.00
		735073016	78" Heavy Duty Dirt Bucket (1981 mm), 15.9 cu. ft. Heaped Capacity	526 LB		$1,442.00
		735074016	84" Heavy Duty Dirt Bucket (2134 mm), 19.4 cu. ft. Heaped Capacity	550 LB		$1,550.00

SV300 T4 INTERIM SKID STEER LOADER
US PRICE LIST

(Ex Works Wichita, KS)

Heavy Duty Tire Assembly

		735094006	12x16.5 Heavy Duty (70 OTW) RH Kit Galaxy XD2002 Reference Loader Stop matrix. 1 tire assembly	141 LB		$447.00
		735114006	12x16.5 Heavy Duty (70 OTW) LH Kit Galaxy XD2002 Reference Loader Stop matrix. 1 tire assembly	141 LB		$447.00

Premium Tire Assembly

		735095006	12x16.5 Premium (70 OTW) RH Kit Galaxy Beefy Baby II Reference Loader Stop matrix. 1 tire assembly	152 LB		$546.00
		735115006	12x16.5 Premium (70 OTW) LH Kit Galaxy Beefy Baby II Reference Loader Stop matrix. 1 tire assembly	152 LB		$546.00
		735102006	14x17.5 Premium (76 OTW) RH Kit Galaxy Beefy Baby II Reference Loader Stop matrix. 1 tire assembly	89 LB		$745.00
		735121006	14x17.5 Premium (76 OTW) LH Kit Galaxy Beefy Baby II Reference Loader Stop matrix. 1 tire assembly	89 LB		$745.00

Premium-Liner Tire Assembly

		735096006	12x16.5 Premium-Liner (70 OTW) RH Kit Galaxy Beefy Baby II Reference Loader Stop matrix. 1 tire assembly	152 LB		$680.00
		735116006	12x16.5 Premium-Liner (70 OTW) LH Kit Galaxy Beefy Baby II Reference Loader Stop matrix. 1 tire assembly	152 LB		$680.00

Non-Pneumatic Tire Assembly

		735119006	12x16.5 Non-Pneumatic (70 OTW) RH Kit Solid Flex Reference Loader Stop matrix. 1 tire assembly	301 LB		$1,274.00
		735099006	12x16.5 Non-Pneumatic (70 OTW) LH Kit Solid Flex Reference Loader Stop matrix. 1 tire assembly	301 LB		$1,274.00

Severe Duty Tire Assembly

		735097006	12x16.5 Severe Duty (70 OTW) RH Kit Galaxy Hulk Reference Loader Stop matrix. 1 tire assembly	168 LB		$691.00
		735117006	12x16.5 Severe Duty (70 OTW) LH Kit Galaxy Hulk Reference Loader Stop matrix. 1 tire assembly	168 LB		$691.00

Mining Tire Assembly

		735098006	12x16.5 Mining (70 OTW) RH Kit Galaxy King Kong Reference Loader Stop matrix. 1 tire assembly	439 LB		$656.00
		735118006	12x16.5 Mining (70 OTW) LH Kit Galaxy King Kong Reference Loader Stop matrix. 1 tire assembly	439 LB		$656.00

SV300 T4 INTERIM SKID STEER LOADER
US PRICE LIST

(Ex Works Wichita, KS)

Flotation Tire Assembly

		735100006	33x15.5 Flotation (76 OTW) RH Kit Galaxy Hippo Reference Loader Stop matrix. 1 tire assembly	178 LB		$748.00
		735120006	33x15.5 Flotation (76 OTW) LH Kit Galaxy Hippo Reference Loader Stop matrix. 1 tire assembly	178 LB		$748.00

SV300 T4 FINAL SKID STEER LOADER
US PRICE LIST

(Ex Works Wichita, KS)

Standard Equipment

ENGINE:
- FPT F5B FL413E water-cooled diesel engine
- 207 CID (3.4L) Turbo
- Tier 4 Final Certified
- Diesel Oxidation Catalyst (DOC) with Selective Catalytic Reduction (SCR) Muffler
- High Pressure Common Rail (HPCR) Fuel Injection
- Charged Air Cooler (CAC)
- Horsepower:
  - Gross 90
  - Net 84
  - Peak torque 282 lb•ft (383 N•m)
- 120 amp alternator
- Air cleaner - dual element
- Organic Acit Technology (OAT) Anti-freeze solution to -34° F
- Fuel tank - 25.5 gal. (US)
- 3-stack after cooler/radiator/ oil cooler configuration
- Maintenance Free Belt
- Glow Plugs
- Maintenance free 1000 CCA battery with master electrical disconnect

OPERATOR'S PROTECTIVE STRUCTURE:
- Enclosed Cab with Heater and AC
- Control lockout system
- Tilt forward ROPS/FOPS
- Electric parking brake control
- Hand throttle
- Foot throttle
- Low effort servo-assist H-Pattern hand controls
- Proportional auxiliary hydraulic control
- Operator's compartment floor cleanout
- Rear window with emergency escape
- Padded seat bar with integral arm rests
- Air Ride Suspension Seat with 2" retractable lap seat belt
- Foot rest

OPERATOR'S PROTECTIVE STRUCTURE (Continued):
- Dome Light
- 12V Power plug socket
- Cup holder
- Tool Pocket
- Top window
- Headliner
- Alarm package (backup and horn)

OTHER STANDARD FEATURES:
- Lights - 2 front, 2 side, 2 rear flood (halogen)
- Heavy Duty Front Lights
- Pre-wired for rotating beacon
- Service access hood, lockable
- Single point daily service
- Tail lights
- Remote oil drain
- Remote oil and fuel filters
- Block Heater
- Debris Ingression Prevention Sealing
- Heavy Duty Rear Door

INSTRUMENTATION:
- Advanced Instrument Cluster with
  - Hour meter
  - Tachometer
  - Fuel gauge
  - Diesel Exhaust Fluid gauge
  - Engine coolant temperature gauge
  - Diagnostic features
  - Security lock-out
- Warning lights with alarms:
  - Critical system stop
  - Engine system
  - Hydraulic system
  - Electrical and diagnostic system
- Warning alarms:
  - Battery voltage (plus display)
  - Diesel Exhaust Fluid (DEF)
  - Oil Service
- Indicator Light:
  - Engine preheat, Parking brake,
  - Seat bar reminder

SV300 T4 FINAL SKID STEER LOADER
US PRICE LIST

(Ex Works Wichita, KS)

Standard Equipment

DRIVE:
- Servo assist, two-speed hydrostatic four wheel drive
- Spring applied hydraulic release (SAHR) disc parking brake
- Dynamic braking
- ASA #100 drive chain

HYDRAULICS:
- 6 micron oil filtration system
- 3 spool loader control valve
- Auxiliary hydraulics, proportional thumb wheel activated: loader arm mounted with ISO specification flat face "connect-under-pressure" disconnects including case drain
- Heavy duty hydraulic oil cooler
- Loader arm float position
- Auxiliary hydraulic function lockout override
- Loader arm circuit lockout override
- Self Level
- Ride Control

LOADER:
- Heavy Duty Hydraulic attachment coupler
- Vertical Lift geometry
- In-cab Loader Lock
- SAE operating load: 3000 lbs.
- Tipping load: 6000 lbs.

TIRES
- 12 X 16.5 Heavy Duty - 70 inch
- Over-the-Tire Width (OTW)
- Galaxy XD2002

SV300 T4 FINAL SKID STEER LOADER
US PRICE LIST

(Ex Works Wichita, KS)

Models

COMMERCIAL MODEL	Weight	Factory Data	List Price
SV300 T4 FINAL	7,400 LB		$73,643.00

SV300 T4 FINAL SKID STEER LOADER
US PRICE LIST

(Ex Works Wichita, KS)

Factory Supplied Options

Order Code	Description	Weight	Factory Data	List Price

CONTROLS AND TRANSMISSION

SD_01100 CONTROLS LEVEL

		761029	2 Speed Mechanical Controls			No Charge
		761031	2 Speed E-H Controls **Electro-Hydraulic Switchable (ISO-H Pattern) Controls with Two Speed**			$2,245.00

SD_01401 DRIVE CONTROL TYPE

		761040	Hand Controls (H-Pattern)			No Charge
		761042	E-H Controls			No Charge

ROPS/CAB

SD_05009 CAB

		761043	Open Cab (No Heat or HVAC) **with top window and keyed start**			($5,700.00)
		761046	Enclosed Cab with Heater **Includes side windows, front glass door with wiper, shoulder belt, radio with speakers and keyless start**			($1,500.00)
		761045	Enclosed Cab with Heater & AC **Includes side windows, front glass door with wiper, shoulder belt, radio with speakers and keyless start**			No Charge
		761184	Enclosed Cab w/Heat -Demo Door **Includes side windows, 1/2" polycarbonate front door with wiper, shoulder belt, radio with speakers and keyless start**			$314.00
		761183	Enclosed Cab w/HVAC -Demo Door **Includes side windows, 1/2" polycarbonate front door with wiper, shoulder belt, radio with speakers and keyless start**			$1,908.00

SD_05016 OPEN CAB TRIM

		X05016X	No Open Cab Interior Trim Pkg			No Charge
		761186	Open Cab Interior Trim Package **For use wtih Open Cab. Covers interior sides and rear.**			$330.00

SD_05185 CAB SEAT

		761050	Non Suspension Seat			($974.00)
		761052	Suspension Seat (Vinyl)			($624.00)

SV300 T4 FINAL SKID STEER LOADER
US PRICE LIST

(Ex Works Wichita, KS)

		761062	Air Ride Suspension Seat **(Fabric) with temperature control** **(may not be ordered with Open Cab option 761043)**			No Charge

SD_K6480 HEAVY DUTY FRONT LIGHTS

		XK6480X	No Heavy Duty Front Lights			($100.00)
		761201	Heavy Duty Front Lights			No Charge

COUPLER

SD_K5101 COUPLERS

		726003	Manual Coupler			($1,100.00)
		761206	Heavy Duty Hydraulic Coupler			No Charge

BLOCK HEATER

SD_02086 BLOCK HEATER

		X02086X	No Block Heater			($125.00)
		761048	Block Heater (120V)			No Charge

OPERATOR MANUALS

SD_32035 LANGUAGE OPTIONS

		761085	English USA			No Charge
		761088	French Canadian			No Charge
		761097	Spanish Latin American			No Charge

OPTIONAL PACKAGES

SD_01201 OPTION PACKAGES

		761032	Standard Equipment Only			($950.00)
		761034	Front Electric/Multi-Function **Contains Front Electric (Multi-Function) for Standard Auxiliaries**			($587.00)
		761033	Performance Package **Contains ON/OFF One-Way Self Leveling and Ride Control**			No Charge
		761035	Performance w/Front Electric **Contains ON/OFF One-Way Self Leveling, Ride Control and Front Electric**			$669.00
		761036	High Flow Package **Contains High Flow Hydraulics with Front Electric**			$1,421.00
		761037	High Flow Plus Package **Contains Front Electric, High Flow Hydraulics, ON/OFF One-Way Self Leveling and Ride Control**			$2,678.00

SV300 T4 FINAL SKID STEER LOADER
US PRICE LIST

(Ex Works Wichita, KS)

		761039	Enhanced High Flow Package **Only available with units equipped with EH Controls.** **Contains 4000 PSI High Flow Hydraulics, Second Auxiliaries, Front Electric, High Flow Hydraulics, ON/OFF One-way Self Leveling and Ride Control**			$6,181.00

TIRES

SD_16068 TIRE OPTIONS

		8503107	12x16.5 Heavy Duty (70 OTW) **10PR Stamped Center - Galaxy XD2002**			No Charge
		8503207	12x16.5 Premium (70 OTW) **10PR Stamped Center - Galaxy Beefy Baby II**			$221.00
		8503307	12x16.5 Premium-Liner (70 OTW) **10PR Stamped Center - Galaxy Beefy Baby II**			$391.00
		8503407	12x16.5 Severe Duty (70 OTW) **12PR Welded Plate Center - Galaxy Hulk**			$536.00
		8503507	12x16.5 Mining (70 OTW) **12PR Welded Plate Center - Galaxy King Kong**			$639.00
		8503607	12x16.5 Non-Pneumatic (70 OTW) **Welded Plate Center - Solid Flex**			$3,152.00
		8505007	33X15.5 Flotation (76 OTW) **12PR Welded Plate Center - Galaxy Hippo**			$371.00
		8505107	14x17.5 Premium (76 OTW) **may not be used for over-the-wheel tracks** **10PR Welded Plate Center - Galaxy Beefy Baby II**			$536.00

FRONT ATTACHMENTS

BUCKETS

SD_K5231 BUCKETS

		XK5231X	No Bucket			No Charge
Dirt & Foundry Bucket						
		761125	72" Dirt & Foundry Bucket **(1829 mm), 16.7 cu. ft. Heaped Capacity**			$1,071.00
		761126	78" Dirt & Foundry Bucket **(1981 mm), 18.4 cu. ft. Heaped Capacity**			$1,112.00
Heavy Duty Dirt Bucket						
		761142	72" Heavy Duty Dirt Bucket **(1829 mm), 14.6 cu. ft. Heaped Capacity**			$1,329.00
		761143	78" Heavy Duty Dirt Bucket **(1981 mm), 15.9 cu. ft. Heaped Capacity**			$1,442.00
		761144	84" Heavy Duty Dirt Bucket **(2134 mm), 19.4 cu. ft. Heaped Capacity**			$1,550.00

SV300 T4 FINAL SKID STEER LOADER
US PRICE LIST

(Ex Works Wichita, KS)

Light Material Bucket						
		761136	72" Light Material Bucket **(1829 mm), 14.5 cu. ft. Heaped Capacity**			$901.00
		761137	84" Light Material Bucket **(2134 mm), 27.9 cu. ft. Heaped Capacity**			$1,051.00
Low Profile Bucket						
		761129	72" Low Profile Bucket **(1829 mm), 14.5 cu. ft. Heaped Capacity**			$968.00
Low Profile Extended Bucket						
		761132	72" Low Profile Extended **(1829 mm), 17.1 cu. ft. Heaped Capacity**			$1,076.00
		761133	78" Low Profile Extended **(1981 mm), 18.6 cu. ft. Heaped Capacity**			$1,164.00
		761134	84" Low Profile Extended **(2134 mm), 20.2 cu. ft. Heaped Capacity**			$1,257.00
Manure & Slurry Bucket						
		761139	72" Manure-Slurry Bucket **(1829 mm), 19.1 cu. ft. Heaped Capacity**			$917.00
		761140	84" Manure-Slurry Bucket **(2134 mm), 22.5 cu. ft. Heaped Capacity**			$1,066.00

SPILL GUARDS

SD_K5400 SPILL GUARDS

		XK5400X	No Spill Guard			No Charge
		761177	72" Spill Guard **For use with Heavy Duty Buckets only**			$216.00
		761178	78" Spill Guard **For use with Heavy Duty Buckets only**			$237.00
		761179	84" Spill Guard **For use with Heavy Duty Buckets only**			$252.00

BOLT ON CUTTING EDGES

SD_K6399 BOLT ON CUTTING EDGE

		XK6399X	No Bolt on Cutting Edge			No Charge
		761147	72" Bolt on Cutting Edge			$258.00
		761148	78" Bolt on Cutting Edge			$278.00
		761149	84" Bolt on Cutting Edge			$299.00

MOVE TO BIC

SD_K6440 OFF-SITE SERVICE

		XK6440X	No Offsite Service Arrangement			No Charge
		761175	Offsite Service Arrangement			No Charge

SV300 T4 FINAL SKID STEER LOADER
US PRICE LIST

(Ex Works Wichita, KS)

SPECIAL PAINT

SD_50103 SPECIAL PAINT

		X50103X	No Special Paint			No Charge
		726029	Special Paint **The price listed is for a color change only from the standard factory color: CNH #86609760 (MS42-Tan). All Special Color formulations will be applied using approved factory processes and materials. Metallic or other special formulations and/or materials are not available. A color chip must be provided to CNH for non CNH colors. A minimum lead time of 8 business weeks will be required prior to production. Unless specified, regular production decals will be applied. Requests can be made that decals not be applied. However, SAFETY decals MUST BE APPLIED in all cases. The following components remain CNH grey: lift & bucket cylinders, front coupler and attachments, ROPS, side screens, rear hood, upper chassis and control links.**			$3,213.00

TELEMATICS

SD_K6450 TELEMATICS

		XK6450X	No Telematics			No Charge
		761187	CASE SiteWatch Telematics			$874.00

SV300 T4 FINAL SKID STEER LOADER
US PRICE LIST

(Ex Works Wichita, KS)

Factory Supplied Attachments

Order Code			Description	Weight	Factory Data	List Price
Basic Attachments						
		735030006	Demo Rear Door Insert	32 LB		$330.00
		735006006	Beacon Kit	1 LB		$165.00
		735007006	4-Corner LED Strobe Kit Must order connector. Reference dependency matrix.	24 LB		$536.00
		735159026	Heater Complete For use with Tier 3 Must order applicable harness. Reference dependency matrix.	137 LB		$1,472.00
		735159046	Heater Complete For use with SR220 Tier 4 Interim, SR240 Tier 4 Final, SR250 Tier 4 Interim, SV250 Tier 4 Interim, SV280 Tier 4 Final and SV300 Tier 4 Inteirm Must order applicable harness. Reference dependency matrix.	141 LB		$1,472.00
		735159066	Heater Complete For use with SR270 Tier 4 Final and SV300 Tier 4 Final	118 LB		$1,472.00
		735158066	HVAC Complete For use with SV250 Tier 3 and SV300 Tier 3 Must order applicable harness. Reference dependency matrix.	383 LB		$3,162.00
		735158156	HVAC Complete For use with SV250 Tier 4 Interim and SV300 Tier 4 Interim Must order applicable harness. Reference dependency matrix.	381 LB		$3,162.00
		735158206	HVAC Complete For use with SV300 Tier 4 Final Must order applicable harness. Reference dependency matrix.	396 LB		$3,162.00
		735146006	Three Point Seat Belt	4 LB		$250.00
		735011006	Glass Front Door Kit Center mounted wiper Requires three point seat belt. Must order applicable harness. Reference dependency matrix.	182 LB		$1,653.00
		735012006	Demo Front Door Kit Center mounted wiper Requires three point seat belt. Must order applicable harness. Reference dependency matrix.	182 LB		$2,905.00
		735013006	Cab Side Windows Kit	139 LB		$927.00
		735016006	Radio Kit Must order applicable harness. Reference dependency matrix.	16 LB		$443.00
		735149006	Open Cab Interior Trim Kit For use with SR270 Tier 4 Final and SV300 Tier 4 Final	42 LB		$399.00
		735150006	Open Cab Interior Trim Kit For use with Open Cab. Covers interior sides and rear.	20 LB		$399.00
		735020026	Road Light Kit For use with SV250 Tier 3 and Tier 4 Interim, SV280 Tier 4 Final and SV300 Tier 3 and Tier 4 Interim Must order applicable harness. Reference dependency matrix.	111 LB		$649.00
		735124006	Side Lamp Kit	6 LB		$272.00
		735021016	Multi-Function Front Electrical Mech Kit For use with SV250 Tier 3 and Tier 4 Interim, SV280 Tier 4 Final and SV300 Tier 3 and Tier 4 Interim Must order applicable handle. Reference dependency matrix.	11 LB		$294.00

SV300 T4 FINAL SKID STEER LOADER
US PRICE LIST

(Ex Works Wichita, KS)

		735021046	Multi-Function Front Electrical Mech Kit For use with SV300 T4 Final Must order applicable handle. Reference dependency matrix.	62 LB		$294.00
		735125016	Multi-Function Front Electrical E-H Kit For use with SV250 Tier 3 and Tier 4 Interim, SV280 Tier 4 Final and SV300 Tier 3 and Tier 4 Interim	11 LB		$294.00
		735125046	Multi-Function Front Electrical E-H Kit For use with SV300 Tier 4 Final	62 LB		$294.00
		735022016	One Way Self Level Kit	14 LB		$520.00
		735023006	Ride Control Kit Must order applicable handle. Reference dependency martix.	33 LB		$515.00
		735024016	Hydraulic Coupler Kit Must order applicable harness. Reference dependency matrix.	159 LB		$1,324.00
		735025026	High Flow Auxiliary Kit For use with SV250 Tier 3 and SV300 Tier 3 Must order applicable harness. Reference dependency matrix.	193 LB		$2,699.00
		735025066	High Flow Auxiliary Kit For use with SV250 Tier 4 Interim, SV280 Tier 4 Final and SV300 Tier 4 Interim Must order applicable harness. Reference dependency matrix.	191 LB		$2,699.00
		735025126	High Flow Auxiliary Kit For use with SV300 Tier 4 Final Must order applicable harness. Reference dependency matrix.	97 LB		$2,699.00
		735027026	Second Hydraulic Front Auxiliary Kit For use with SV250 Tier 3 and Tier 4 Interim, SV280 Tier 4 Final and SV300 Tier 3 and Tier 4 Interim Must order applicable handle. Reference dependency matrix.	86 LB		$1,103.00
		735036026	4-Point Lift Hook Kit For use with SR220 Tier 3 and Tier 4 Interim, SR240 T4 Final, SR250 Tier 3 and Tier 4 Interim, SV250 Tier 3 and Tier 4 Interim, SV280 Tier 4 Final and SV300 Tier 4 Interim	10 LB		$238.00
		735036036	4-Point Lift Hook Kit For use with SR270 Tier 4 Final and SV300 Tier 4 Final	20 LB		$238.00
		735037046	Single Point Lift Hook Kit	269 LB		$1,102.00
		735038006	FOPS Level 2 Modification Kit	61 LB		$368.00
		735039026	Extra Counterweight Kit	362 LB		$736.00
		735040036	Aspirator Kit For use with SV250 Tier 3 and SV300 Tier 3	13 LB		$340.00
		735040066	Aspirator Kit For use with SV250 T4 Interim, SV280 T4 Final and SV300 T4 Interim	15 LB		$340.00
		735042006	Interior Mirror Kit	4 LB		$62.00
		735045006	Foot Control Conversion Kit For use with Tier 3	54 LB		$659.00
		735045046	Foot Control Conversion Kit Not available for units equipped with Electro Hydraulic (EH) controls.	52 LB		$659.00
		735046026	Hand Control Conversion Kit For use with SR250 Tier 3 and SV300 Tier 3	78 LB		$883.00
		735046056	Hand Control Conversion Kit For use with units built PRIOR to S/N NDM461595 (SR220 Tier 4 Interim), NDM443253 (SR250 Tier 4 Interim), NDM469210 (SV250 Tier 4 Interim) and NDM460105 (SV300 Tier 4 Interim)	77 LB		$883.00

SV300 T4 FINAL SKID STEER LOADER
US PRICE LIST

(Ex Works Wichita, KS)

		735046066	Hand Control Conversion Kit For use with units built AFTER S/N NDM461595 (SR220 Tier 4 Interim and Final), NDM443253 (SR250 Tier 4 Interim and Final), NDM469210 (SV250 Tier 4 Interim and Final) and NDM460105 (SV300 Tier 4 Interim and Final)	76 LB		$883.00
		735047006	120V Block Heater Kit	6 LB		$221.00
		735048006	220V Block Heater Kit	6 LB		$221.00
		735142006	Cylinder Guard Kit	21 LB		$792.00
		735151066	Debris Seal Kit For use with SV250 Tier 3 and Tier 4 Interim, SV280 Tier 4 Final and SV300 Tier 3 and Tier 4 Interim Reduces debris ingression to engine compartment and chassis	17 LB		$283.00
		735161016	Heavy Duty Front Lights - Vertical Model For use with SV250 T4 Interim, SV280 T4 Final and SV300 T4 Interim	26 LB		$429.00
		735163006	Heavy Duty Rear Door For use with SR220 T4 Interim, SR240 T4 Final, SR250 T4 Interim, SV250 T4 Interim, SV280 T4 Final and SV300 T4 Interim	140 LB		$769.00

Handles - E-H Models

		735126006	LH EH Handle Kit (NO 2nd Aux) Adds Front Electric.	2 LB		$191.00
		735127006	RH EH Handle Kit Adds Front Electric.	2 LB		$191.00
		735132006	LH EH Handle Kit (WITH 2nd Aux) Adds Second Auxiliary with Front Electric.	2 LB		$191.00

Handles - Mechanical Models

		735134006	LH Mechanical Handle Kit (NO 2nd Aux) Adds Front Electric.	2 LB		$191.00
		735135006	LH Mechanical Handle Kit (WITH 2nd Aux) Adds Second Auxiliary with Front Electric.	2 LB		$191.00
		735136006	RH Mechanical Handle Kit Adds Front Electric.	2 LB		$191.00

Pallet Fork

		735075006	Pallet Fork Frame w/48" Tines	540 LB		$1,355.00

Dirt & Foundry Bucket

		735055016	72" Dirt & Foundry Bucket (1829 mm), 16.7 cu. ft. Heaped Capacity	407 LB		$1,071.00
		735056016	78" Dirt & Foundry Bucket (1981 mm), 18.4 cu. ft. Heaped Capacity	429 LB		$1,112.00

Low Profile Bucket

		735059016	72" Low Profile Bucket (1829 mm), 14.5 cu. ft. Heaped Capacity	471 LB		$968.00

Low Profile Extended Bucket

		735062016	72" Low Profile Extended Bucket (1829 mm), 17.1 cu. ft. Heaped Capacity	504 LB		$1,076.00

SV300 T4 FINAL SKID STEER LOADER
US PRICE LIST

(Ex Works Wichita, KS)

		735063016	78" Low Profile Extended Bucket (1981 mm), 18.6 cu. ft. Heaped Capacity	531 LB		$1,164.00
		735064016	84" Low Profile Extended Bucket (2134 mm), 20.2 cu. ft. Heaped Capacity	607 LB		$1,257.00

Light Material Bucket

		735066016	72" Light Material Bucket (1829 mm), 23.7 cu. ft. Heaped Capacity	466 LB		$901.00
		735067016	84" Light Material Bucket (2134 mm), 27.9 cu. ft. Heaped Capacity	532 LB		$1,051.00

Manure & Slurry Bucket

		735069016	72" Manure-Slurry Bucket (1829 mm), 19.1 cu. ft. Heaped Capacity	469 LB		$917.00
		735070016	84" Manure-Slurry Bucket (2134 mm), 22.5 cu. ft. Heaped Capacity	535 LB		$1,066.00

Heavy Duty Dirt Bucket

		735072016	72" Heavy Duty Dirt Bucket (1829 mm), 14.6 cu. ft. Heaped Capacity	501 LB		$1,329.00
		735073016	78" Heavy Duty Dirt Bucket (1981 mm), 15.9 cu. ft. Heaped Capacity	526 LB		$1,442.00
		735074016	84" Heavy Duty Dirt Bucket (2134 mm), 19.4 cu. ft. Heaped Capacity	550 LB		$1,550.00

Heavy Duty Tire Assembly

		735094006	12x16.5 Heavy Duty (70 OTW) RH Kit Galaxy XD2002 Reference Loader Stop matrix. 1 tire assembly	141 LB		$447.00
		735114006	12x16.5 Heavy Duty (70 OTW) LH Kit Galaxy XD2002 Reference Loader Stop matrix. 1 tire assembly	141 LB		$447.00

Premium Tire Assembly

		735095006	12x16.5 Premium (70 OTW) RH Kit Galaxy Beefy Baby II Reference Loader Stop matrix. 1 tire assembly	152 LB		$546.00
		735115006	12x16.5 Premium (70 OTW) LH Kit Galaxy Beefy Baby II Reference Loader Stop matrix. 1 tire assembly	152 LB		$546.00
		735102006	14x17.5 Premium (76 OTW) RH Kit Galaxy Beefy Baby II Reference Loader Stop matrix. 1 tire assembly	89 LB		$745.00
		735121006	14x17.5 Premium (76 OTW) LH Kit Galaxy Beefy Baby II Reference Loader Stop matrix. 1 tire assembly	89 LB		$745.00

Non-Pneumatic Tire Assembly

		735119006	12x16.5 Non-Pneumatic (70 OTW) RH Kit Solid Flex Reference Loader Stop matrix. 1 tire assembly	301 LB		$1,274.00
		735099006	12x16.5 Non-Pneumatic (70 OTW) LH Kit Solid Flex Reference Loader Stop matrix. 1 tire assembly	301 LB		$1,274.00

SV300 T4 FINAL SKID STEER LOADER
US PRICE LIST

(Ex Works Wichita, KS)

Premium-Liner Tire Assembly

		735096006	12x16.5 Premium-Liner (70 OTW) RH Kit Galaxy Beefy Baby II Reference Loader Stop matrix. 1 tire assembly	152 LB		$680.00
		735116006	12x16.5 Premium-Liner (70 OTW) LH Kit Galaxy Beefy Baby II Reference Loader Stop matrix. 1 tire assembly	152 LB		$680.00

Severe Duty Tire Assembly

		735097006	12x16.5 Severe Duty (70 OTW) RH Kit Galaxy Hulk Reference Loader Stop matrix. 1 tire assembly	168 LB		$691.00
		735117006	12x16.5 Severe Duty (70 OTW) LH Kit Galaxy Hulk Reference Loader Stop matrix. 1 tire assembly	168 LB		$691.00

Mining Tire Assembly

		735098006	12x16.5 Mining (70 OTW) RH Kit Galaxy King Kong Reference Loader Stop matrix. 1 tire assembly	439 LB		$656.00
		735118006	12x16.5 Mining (70 OTW) LH Kit Galaxy King Kong Reference Loader Stop matrix. 1 tire assembly	439 LB		$656.00

Flotation Tire Assembly

		735100006	33x15.5 Flotation (76 OTW) RH Kit Galaxy Hippo Reference Loader Stop matrix. 1 tire assembly	178 LB		$748.00
		735120006	33x15.5 Flotation (76 OTW) LH Kit Galaxy Hippo Reference Loader Stop matrix. 1 tire assembly	178 LB		$748.00