KEYSTONE ENGINEERING

PROVEN SOLUTIONS FOR ALL OF YOUR CARBIDE CUTTING NEEDS

Presentation Overview

1. Milling: Factors that Dictate Surface Texture
2. Applications and Advantages of Micro Milling
3. Bump Grinding
4. Longitudinal Joint Repair

Compaction

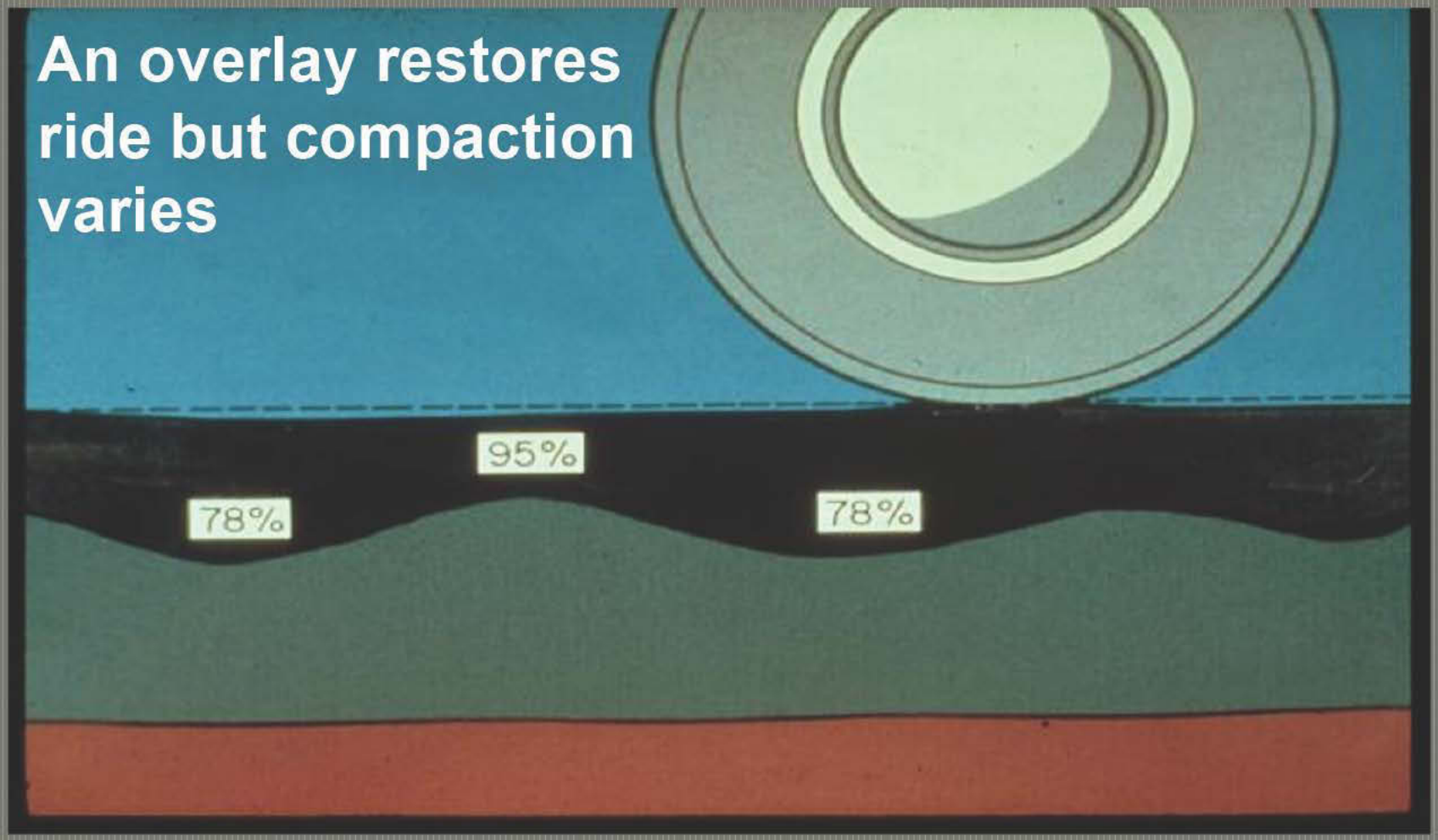

Smooth Surface

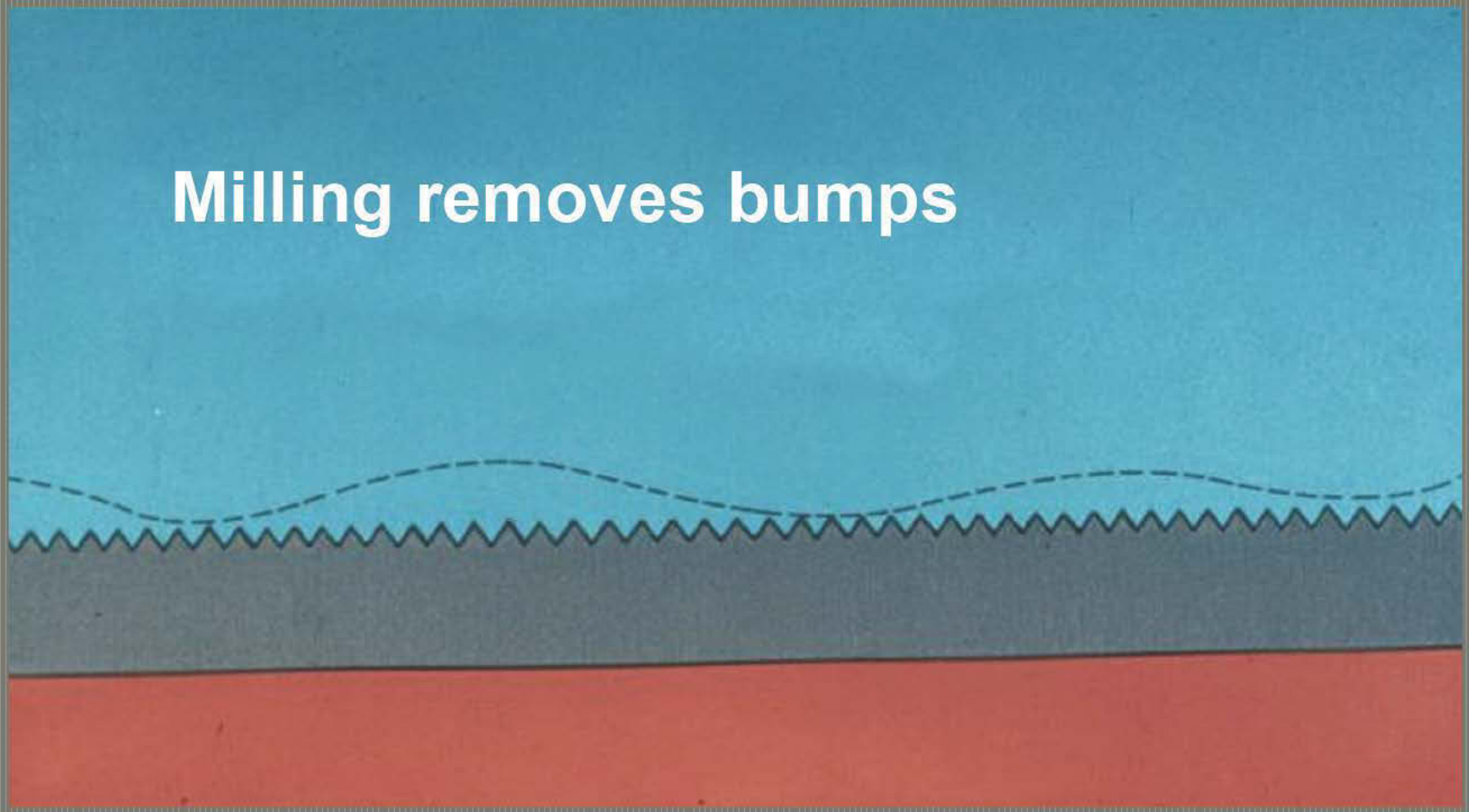

Better Bonding Surface

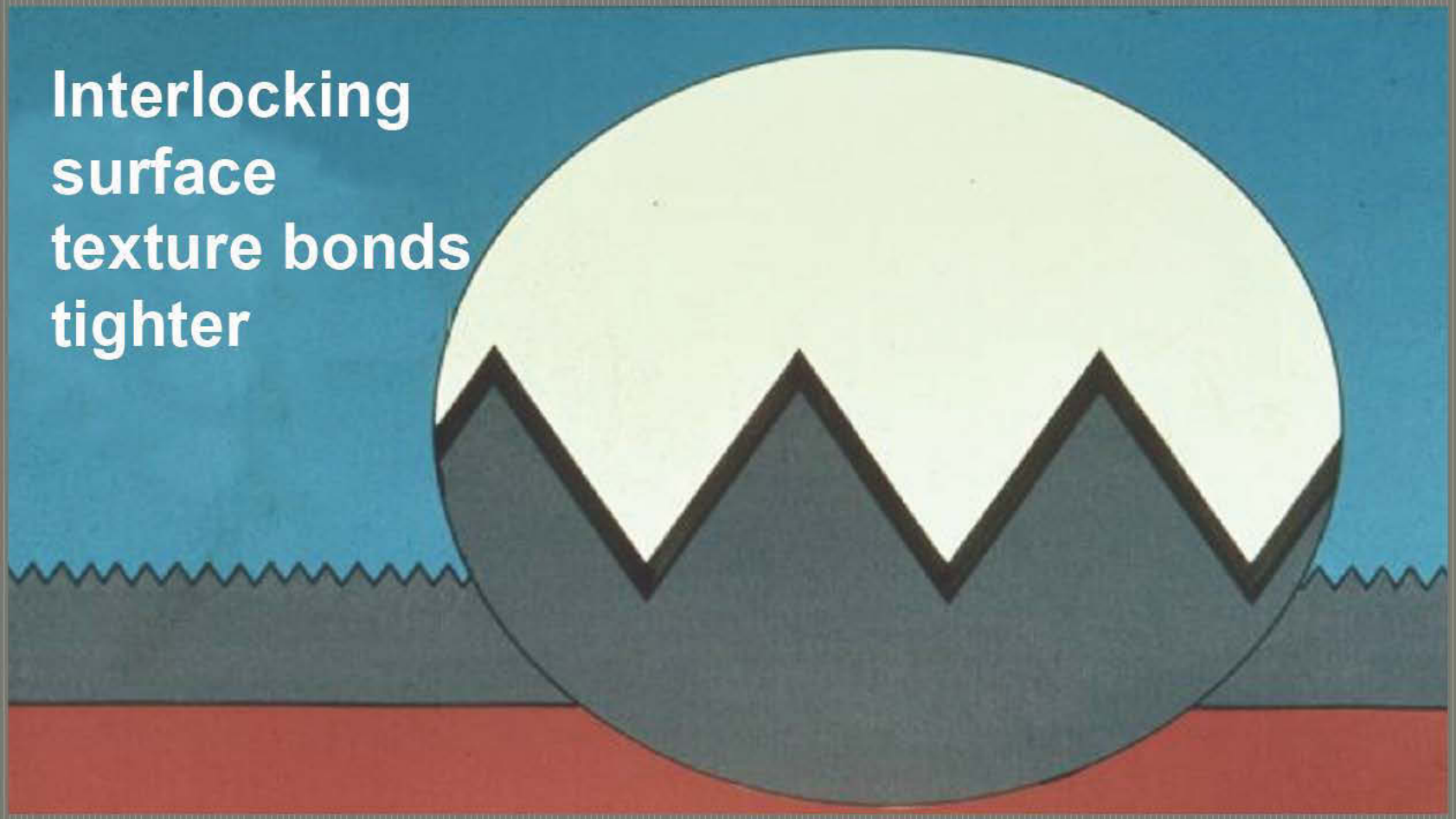

Birth of Milling

Hydrostatic Machines

Original Welded Block

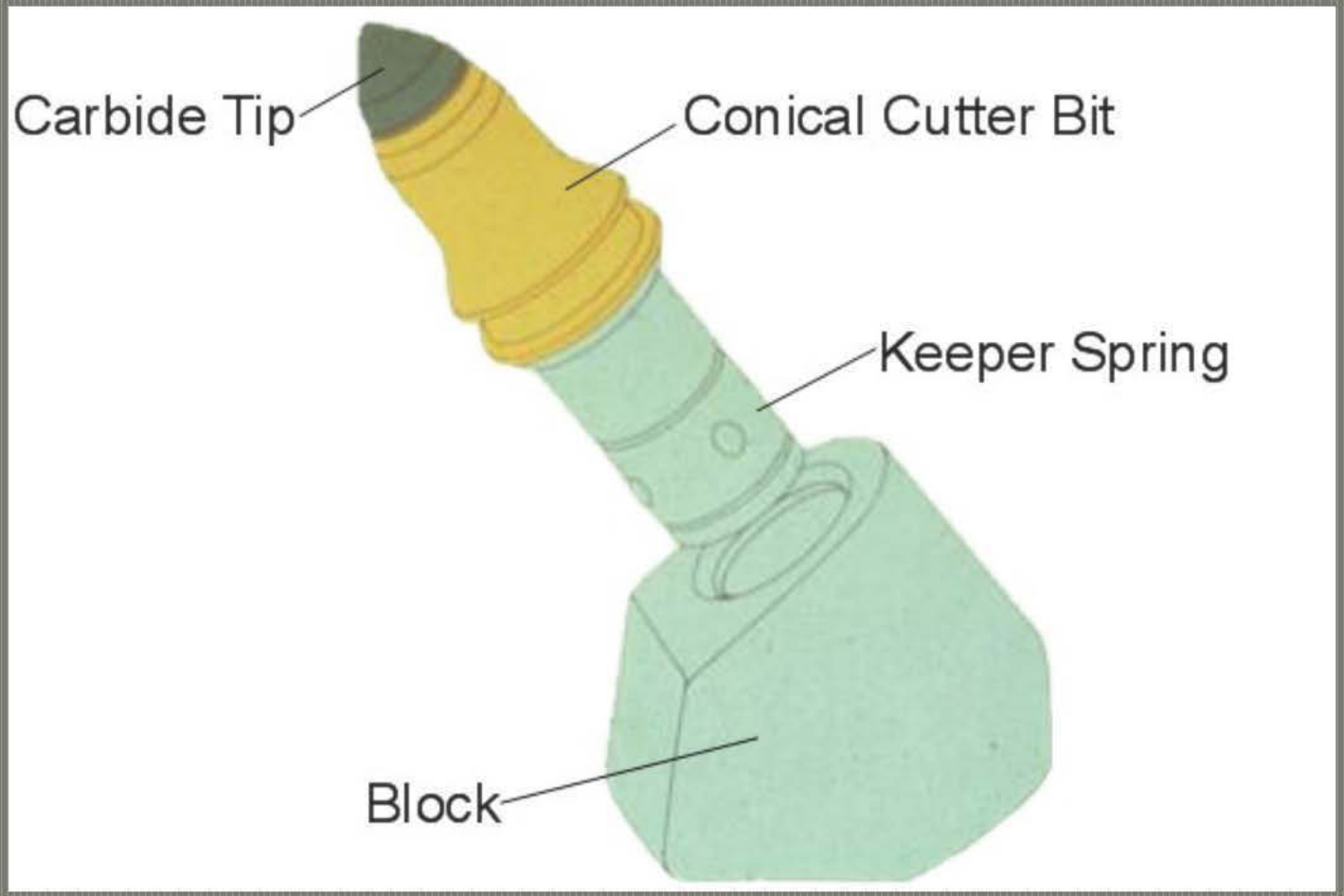

New Cutter Drum Pattern

Block Replacement

Welded Drum

Poorly Maintained Cutter Drum

First Quick Change System

Determining Factors of Surface Texture/Surface Pattern

1. Bit Spacing
2. Forward Cutting Speed
3. Wrap Configuration
4. RPM
5. Diameter of Drum
6. Drum Maintenance

Double Wrap

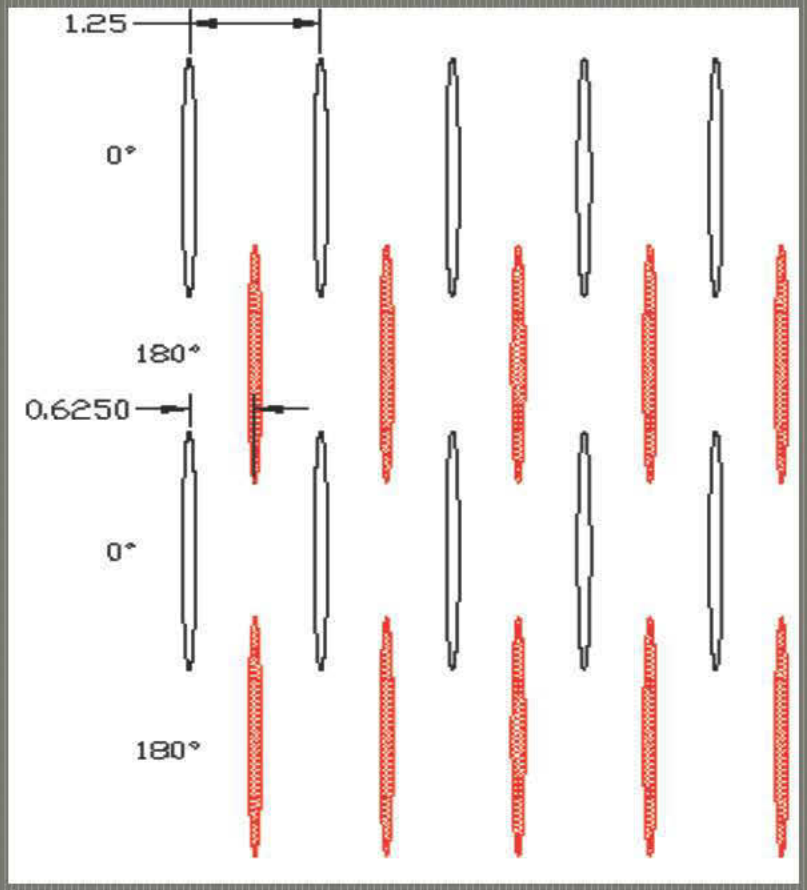

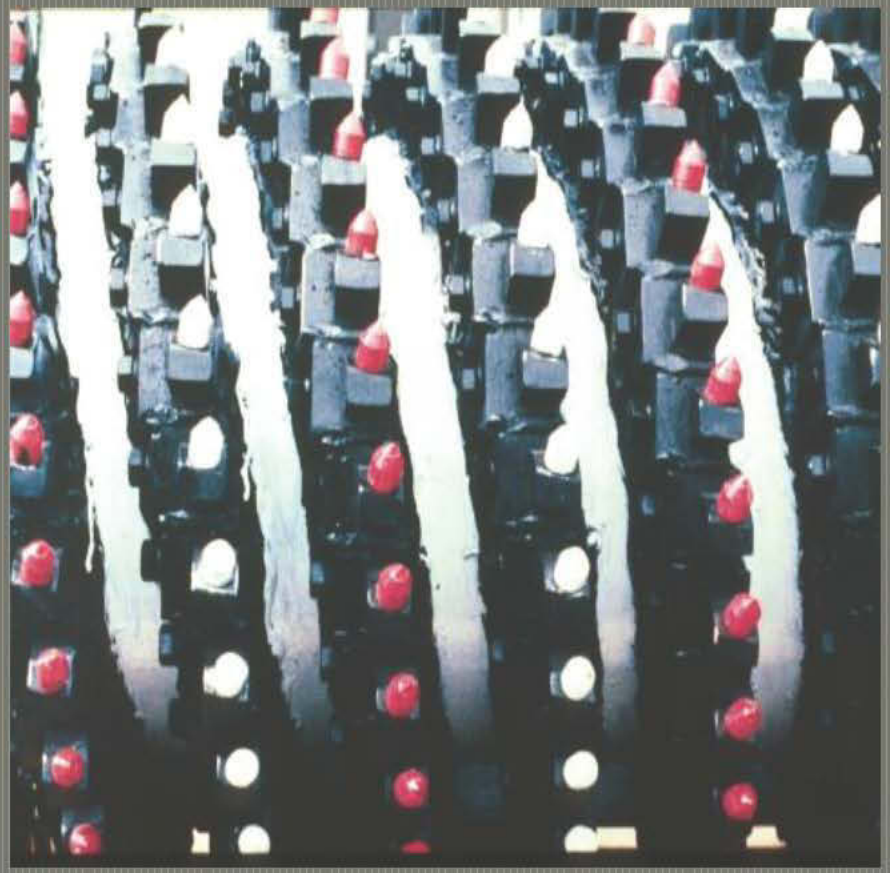

Double Wrap Pattern

Triple Wrap vs. Quad Wrap

5/8” -15mm Spacing (150 Bits)

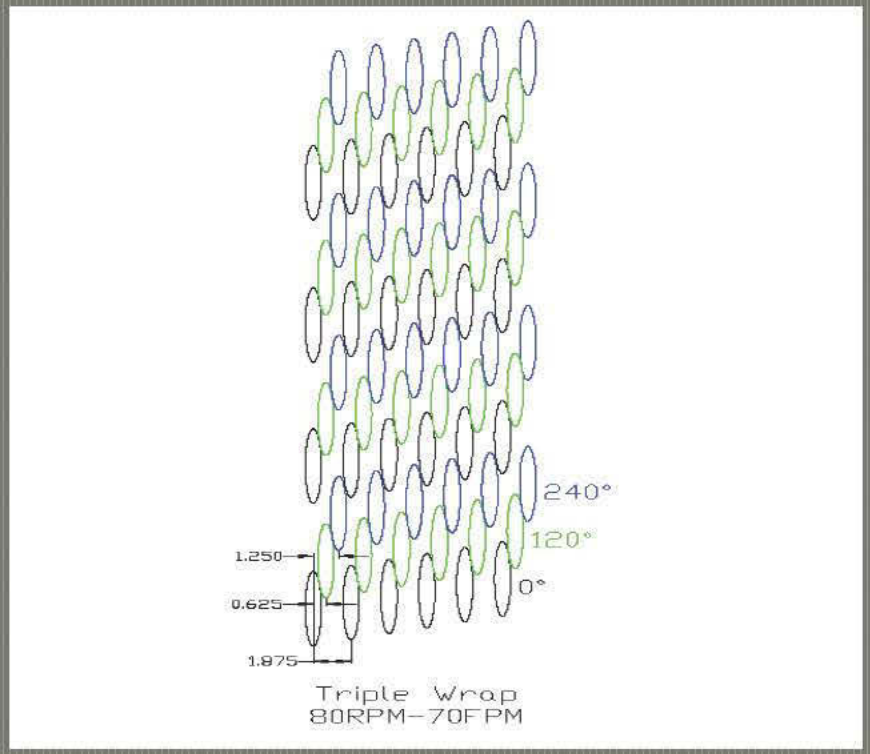

15/16”- 22.5mm spacing (200 Bits)

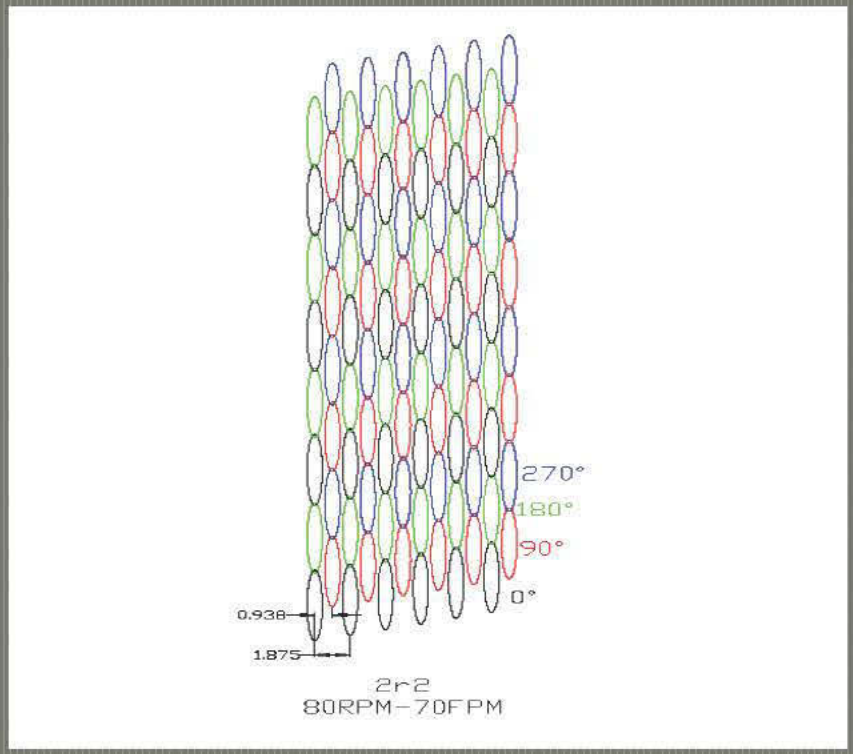

Pattern Generation

The most predominate pattern on the road surface is the cut made by adjacent wraps. By this pattern, forward speed of the machine may be determined.

For example:

Time of one revolution @ 100RPM = 1/100 of a minute = .01 min

If Measured Pattern Distance is 7.2 inches or .6 foot then the forward speed can be determined by:

$$\text{Forward Speed} = \frac{\text{Measured Distance}}{\text{Time of One Revolution}}$$

Example: $\frac{.6'}{.01}$ = 60 Feet per Minute

Affect of Cutting Diameter

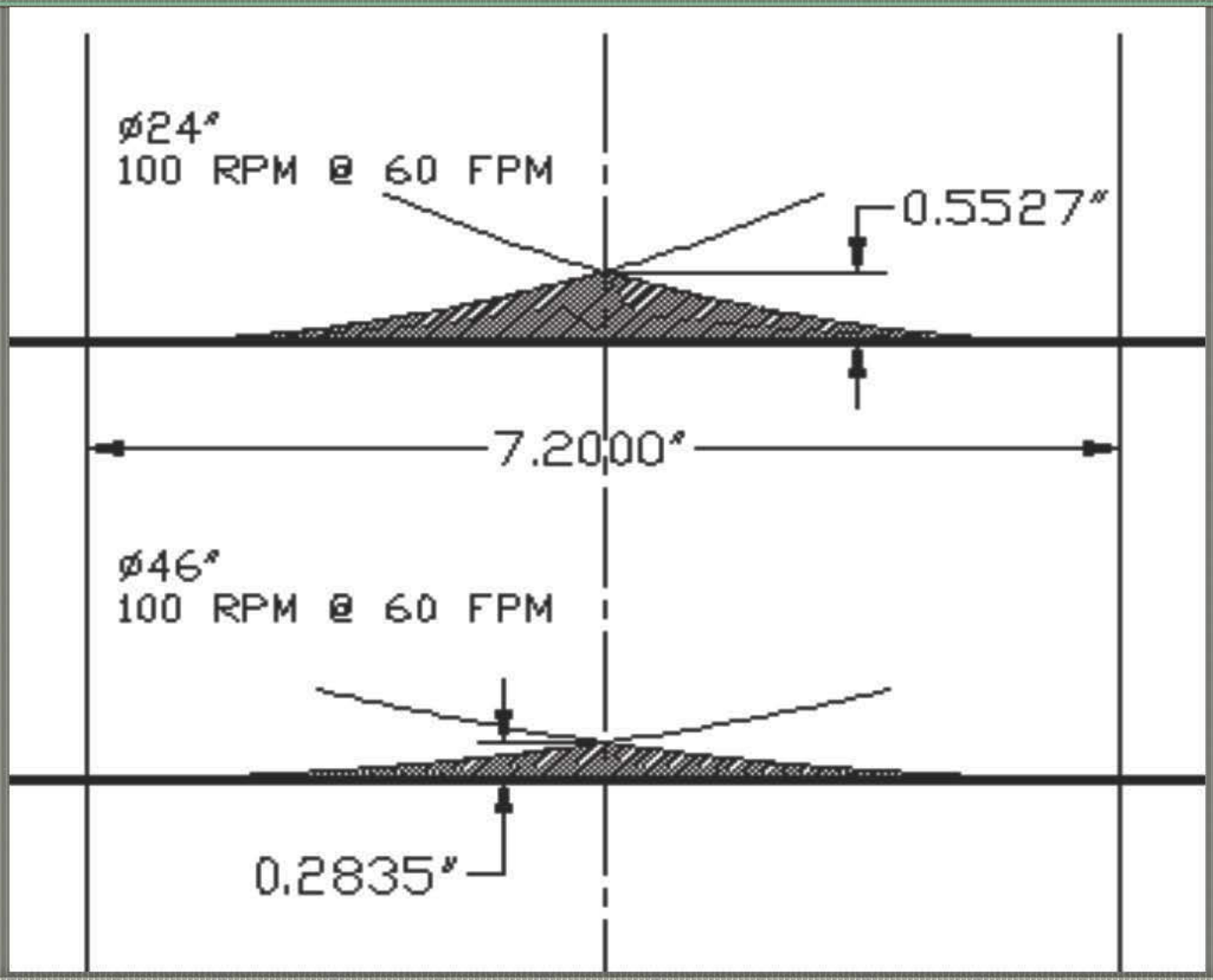

Affect of RPM

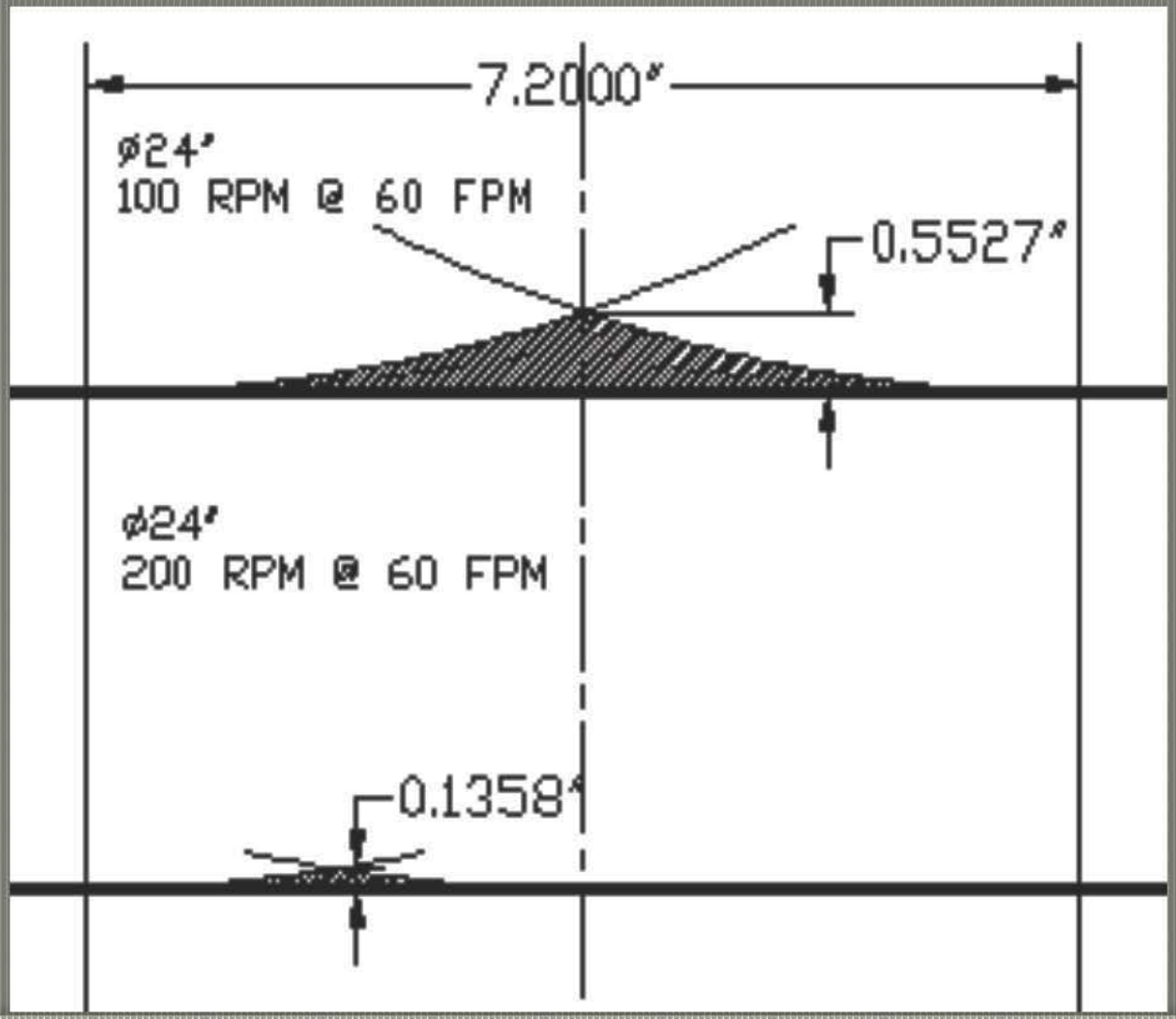

Affect of Forward Speed

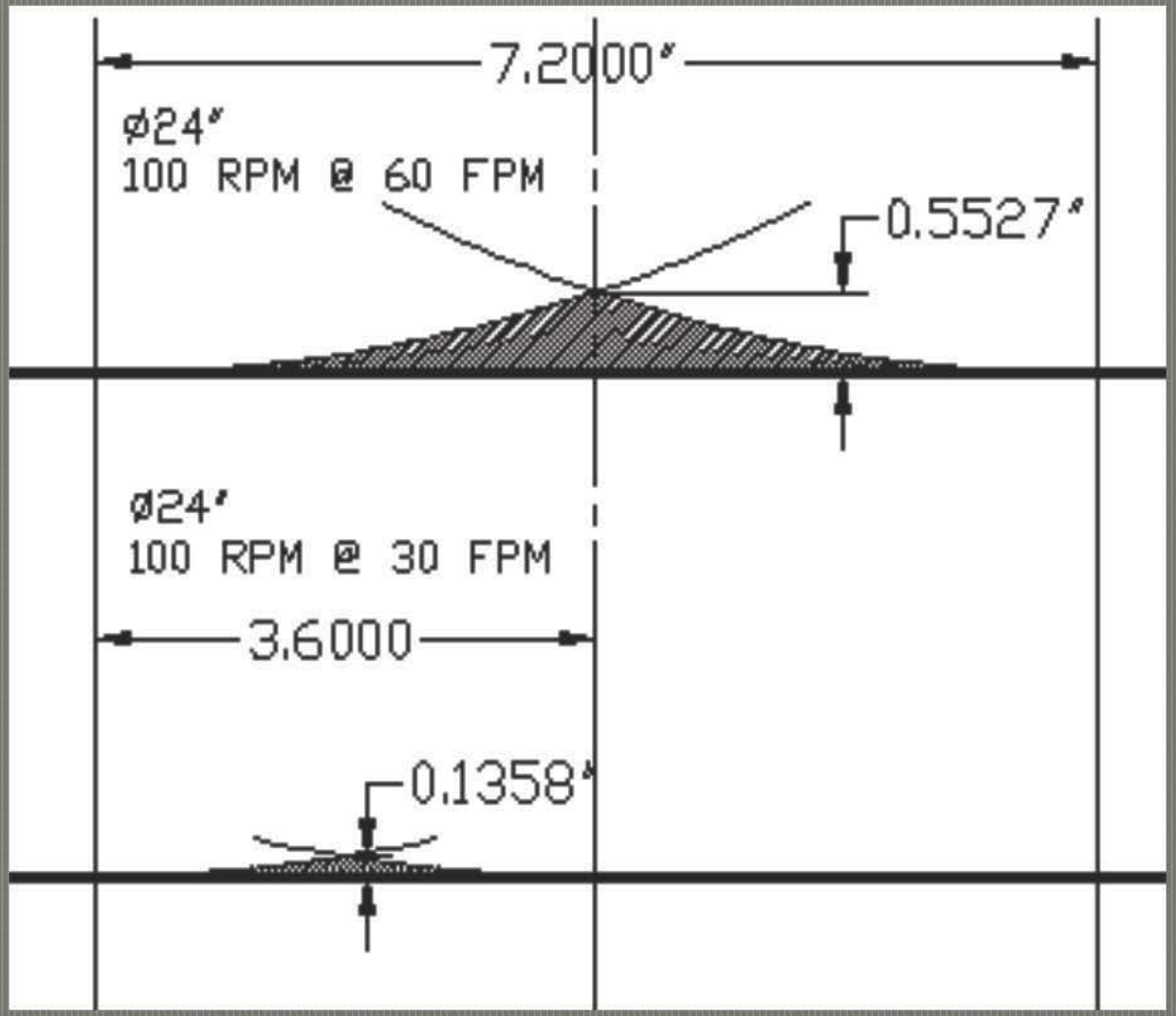

Drum Categories:

- Standard Milling- 5/8” (15mm) Spacing
- Fine Milling-5/16” (8mm) Spacing
- Micro Milling-2/10” (5mm) Spacing

Wrap Design and Micro Milling

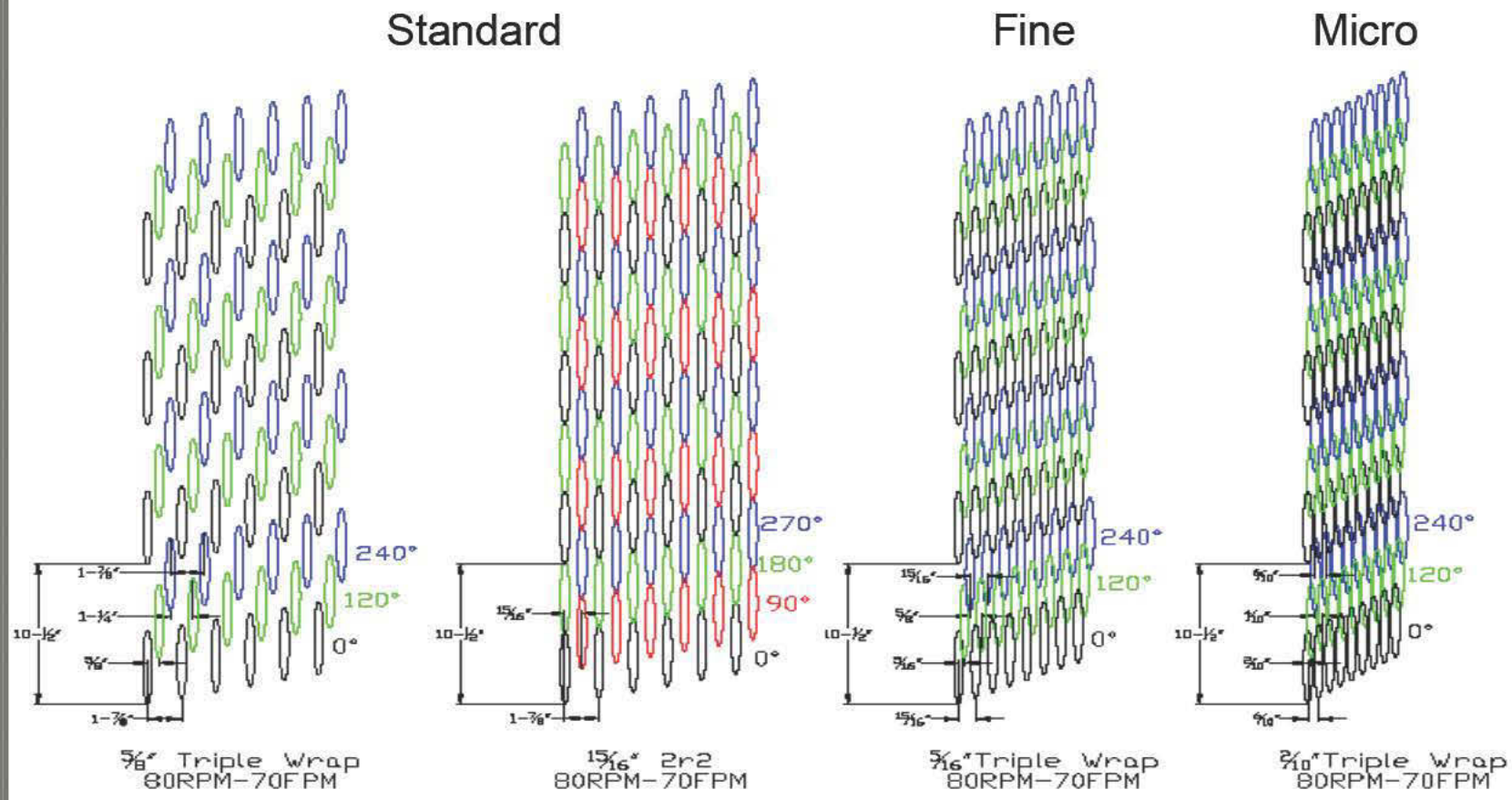

Standard Milling Drum

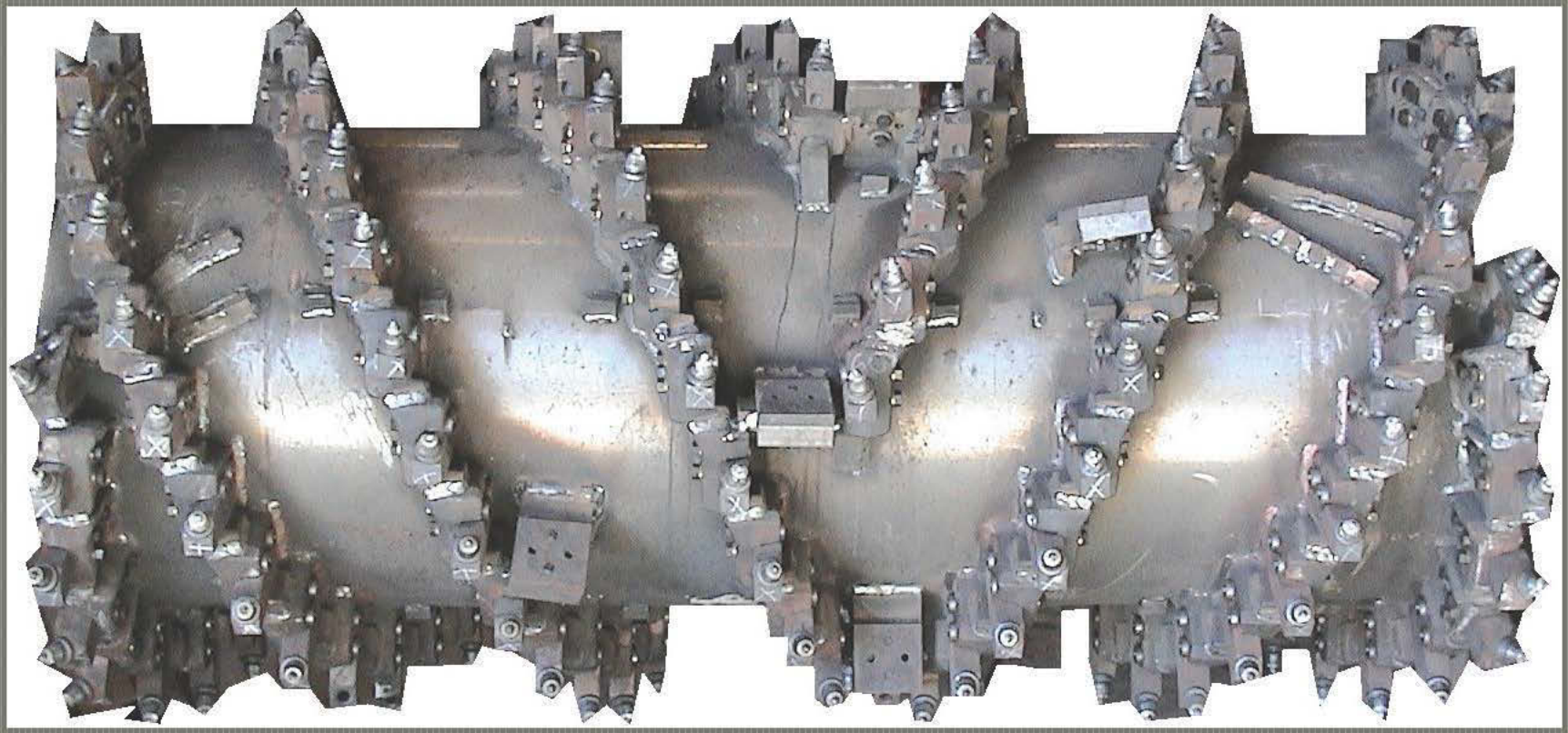

Triple Wrap Lacing at 5/8” (15mm)
Spacing – 150 Bits

Single Block vs. Triple Block

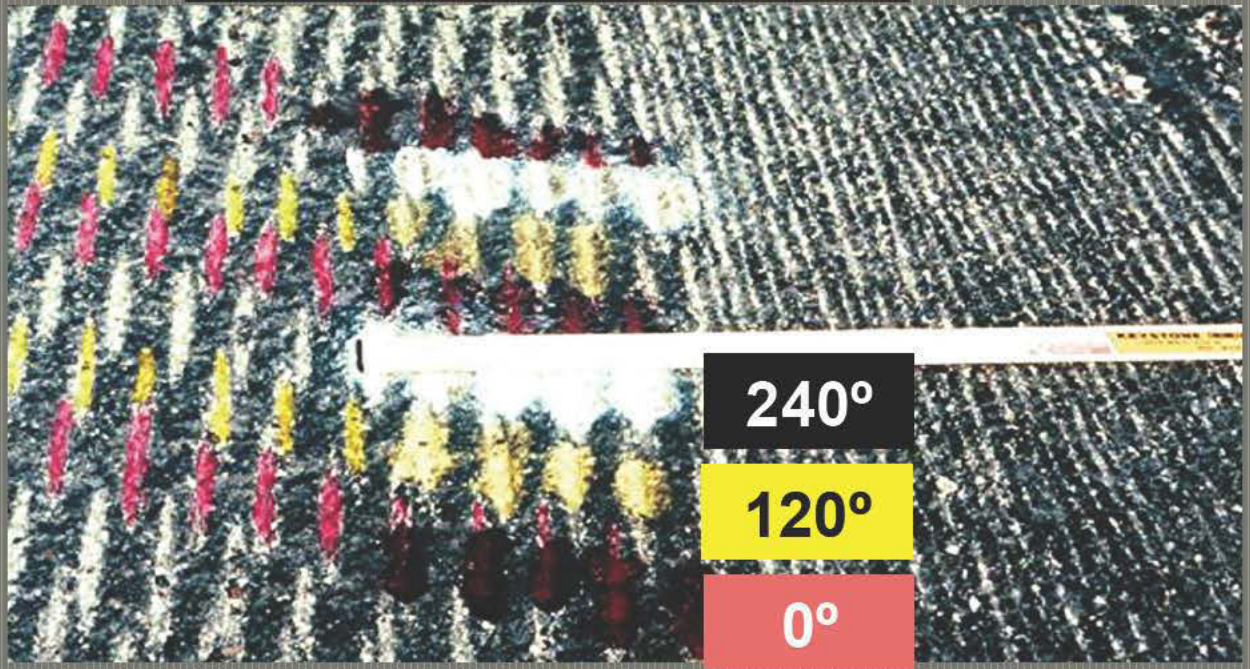

5/8” (15mm) Standard Drum Bit Strikes

Forward Cutting Speed

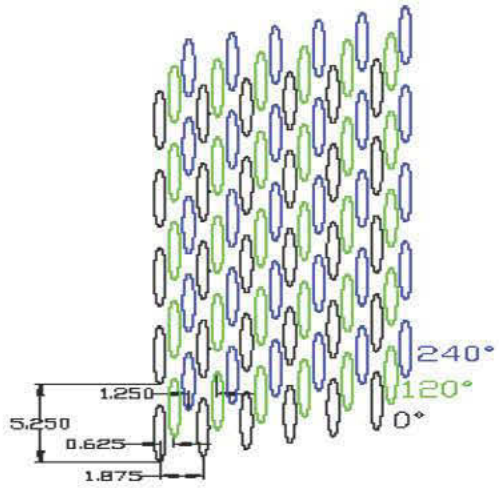

Triple Wrap
80RPM-35FPM

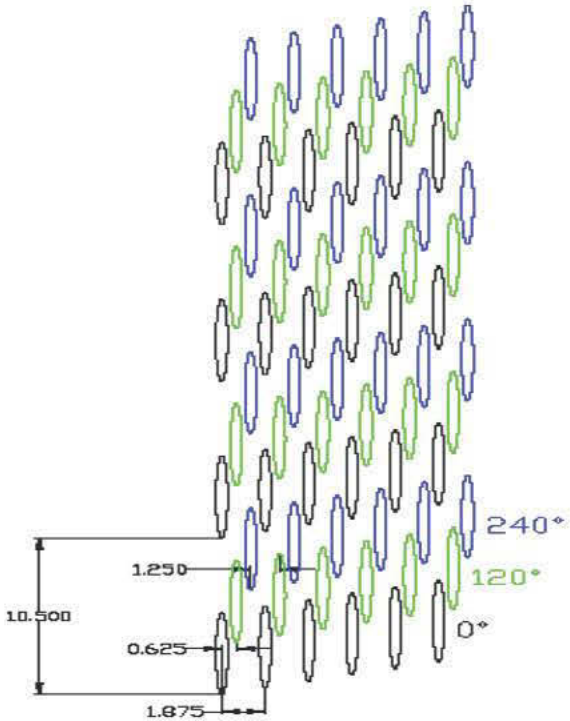

5/8" Triple Wrap
80RPM-70FPM

Forward Cutting Speed

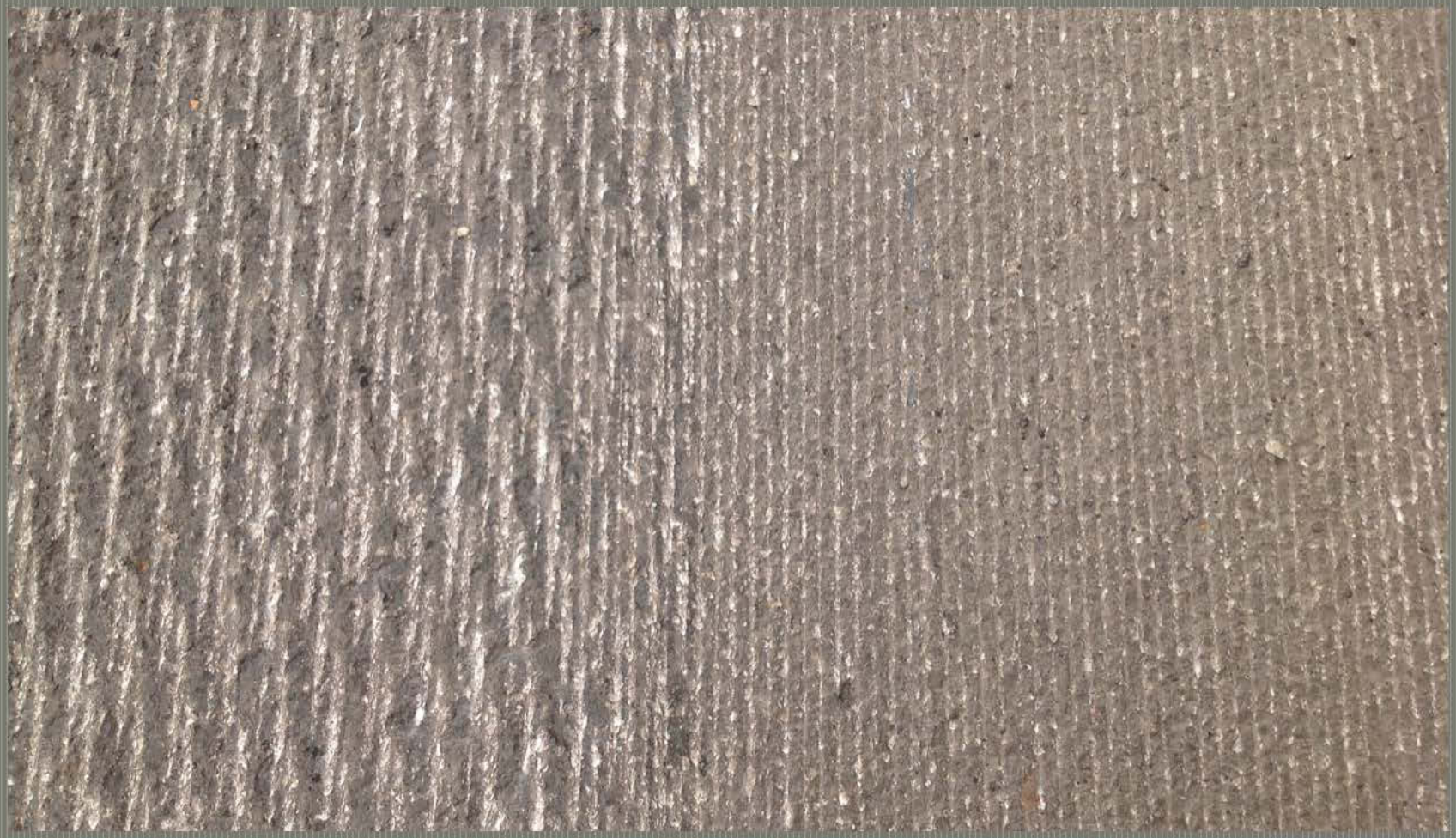

Fine Milling Drum

Triple Wrap Lacing at 5/16” (8mm) Spacing
- 300 Bits

Increased Bit Count Does NOT = Smoother Surface

8 mm Triple Wrap Fine Drum (300 Bits) Vs. 22.5mm-15/16" Quad Wrap Standard Drum (200 Bits)
Both Milled at 85' /Minute

Spacing Can Be Misleading

Specs need to be Held

Micro Mill Drum

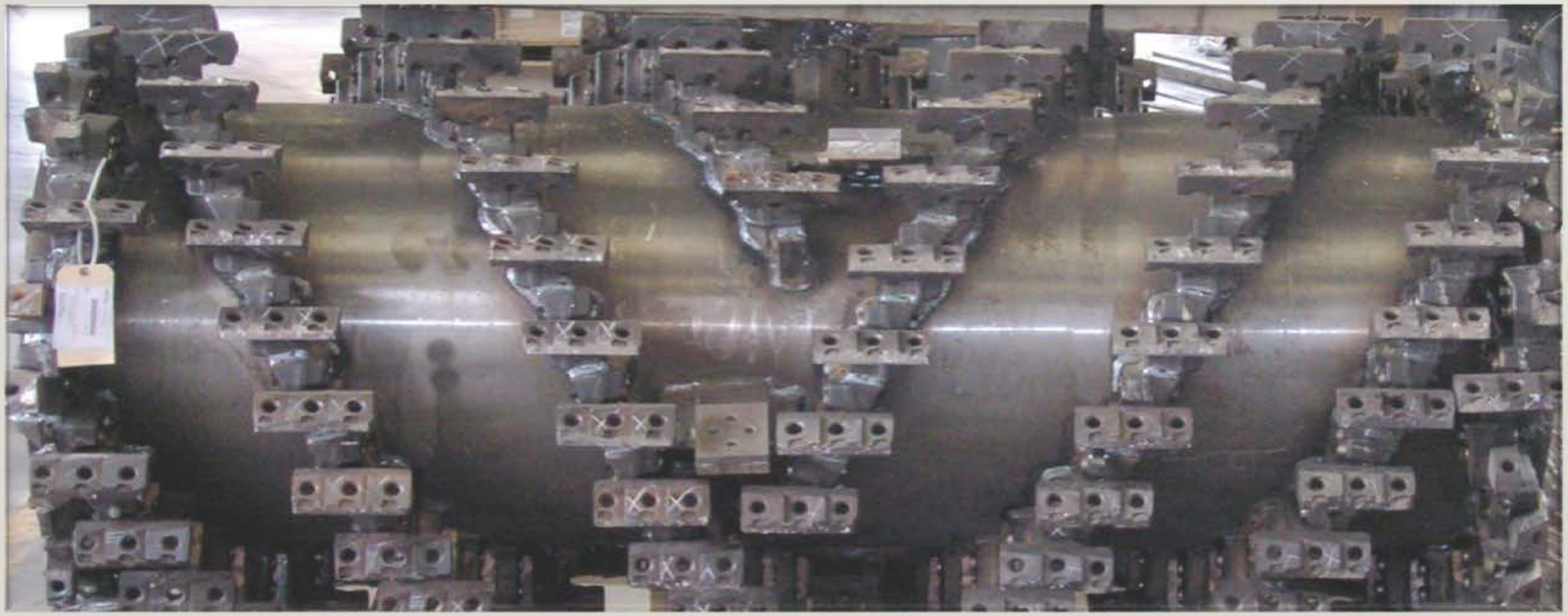

Triple Wrap Lacing at 2/10” (5mm)
Spacing - 450 Bits

A Smoother Surface is a Safer Surface….

Micro Milling Advantages

- Ride Corrective Tool Before Surface Treatment
- Surface Course Removal
- Correctional Work
- Faulted Concrete Correction
- Wheel Rut Removal

Micro Milling Advantages

- Improved Ride on Overlays
- Restores Curb Line
- Reduction in Material Cost
- Safer Driving Surface
- Reduction in RAP Processing Costs

Improved Gradation-
Decreased Crushing Costs

Specifications

Equipment Specs

DO NOT insure end result

Performance Specs

INSURES end result

Allows room for competitiveness and creativity

Performance Based Specs for Micro Milling

- Georgia- Laser Road Profilograph
  - -Removal of Open Grade Friction Course
  - -Multiple Lifts Required Before Micro Milling Spec
  - -Laser Measures the Distance of the Peak/Valley
- Virginia- Micro Milling Sand Test
  - -Smoothness for Safety Reasons
  - -Disconnect of Milling and Paving Operations

Indiana Surface Test (Rockville Road 2005)

Bump Grinding

Flatliner-Bump Grinder

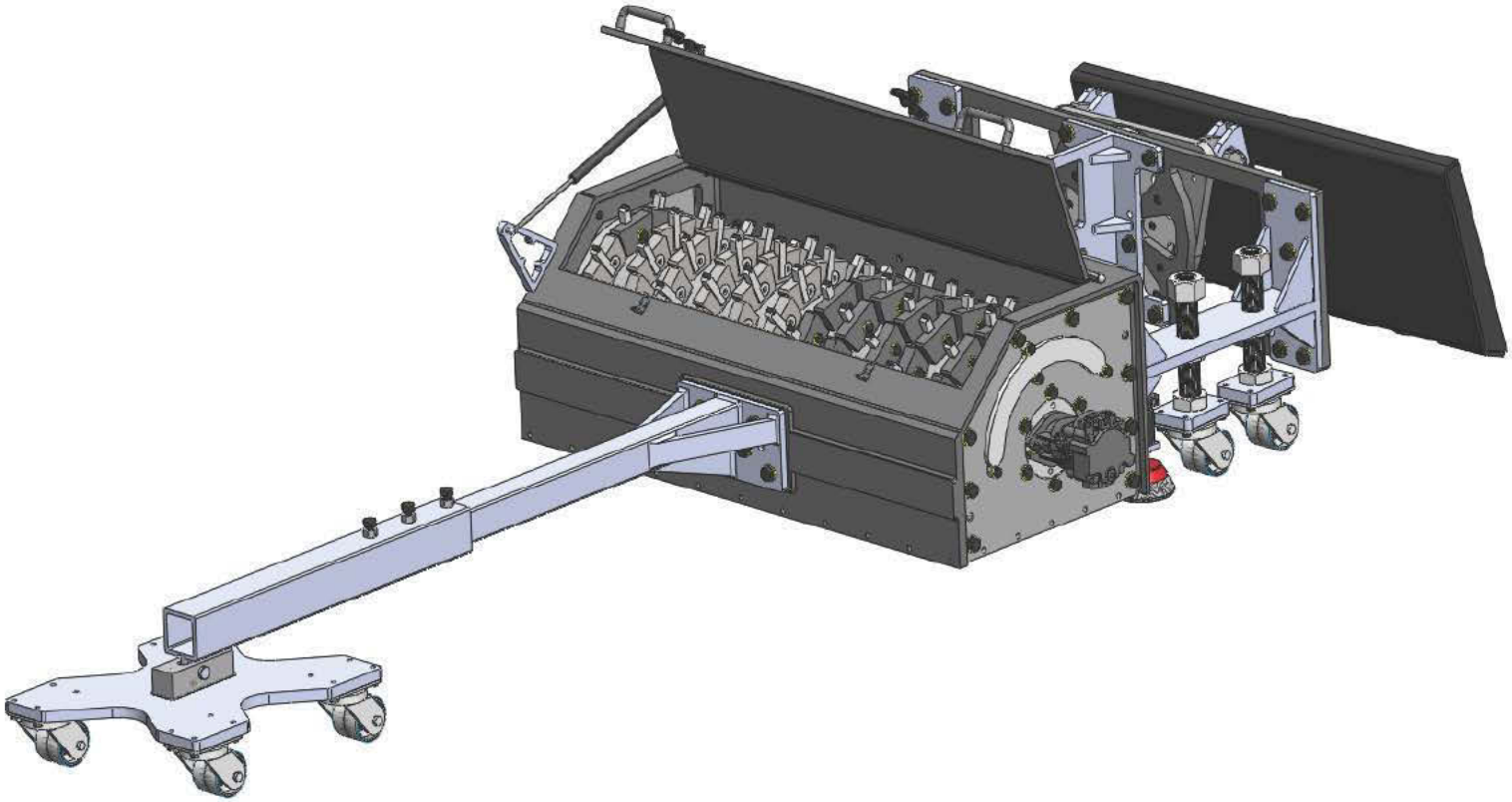

When Conical Won't "Cut It"

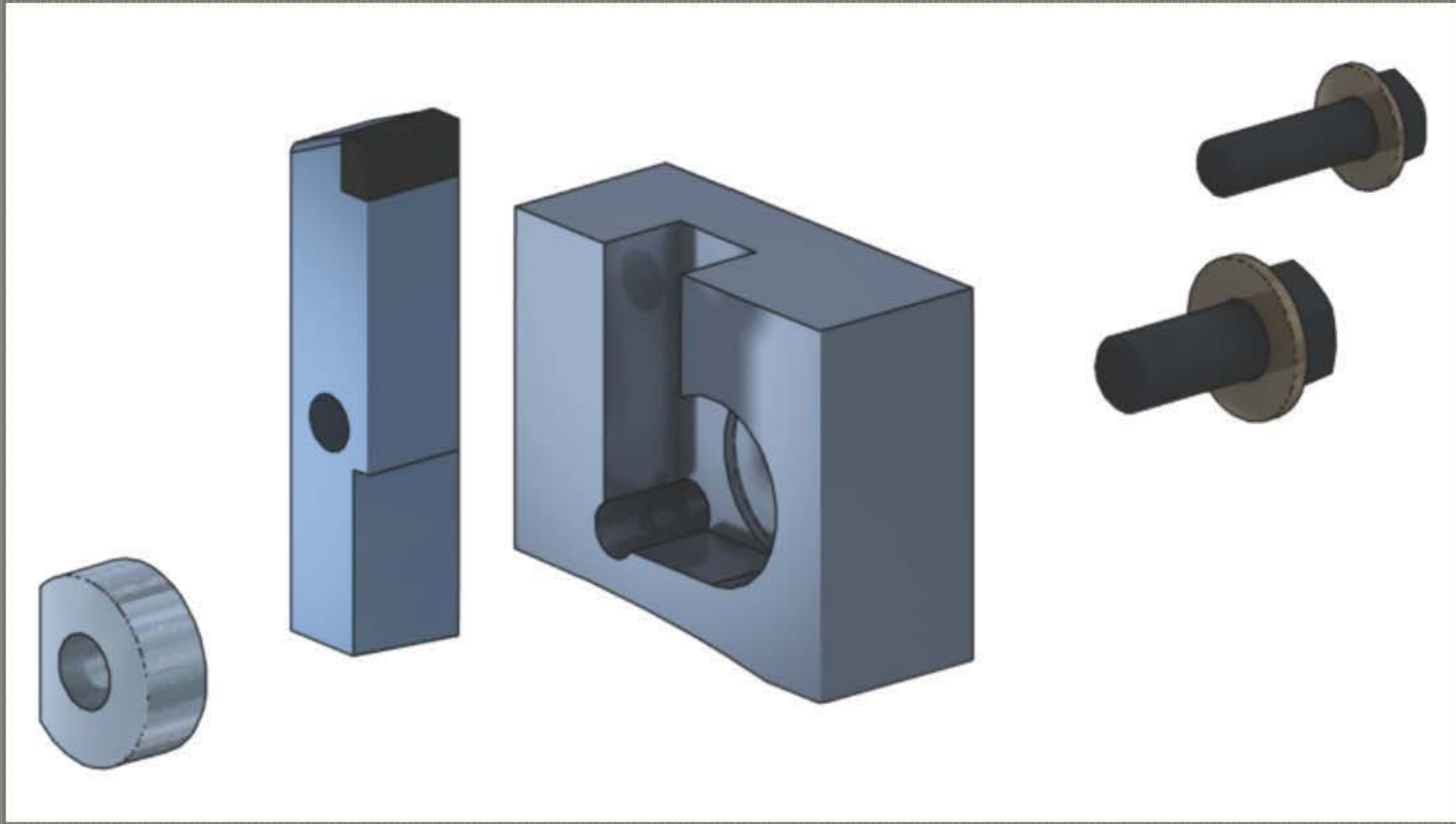

Flat Tooth System

Smoothing Pavement Surfaces

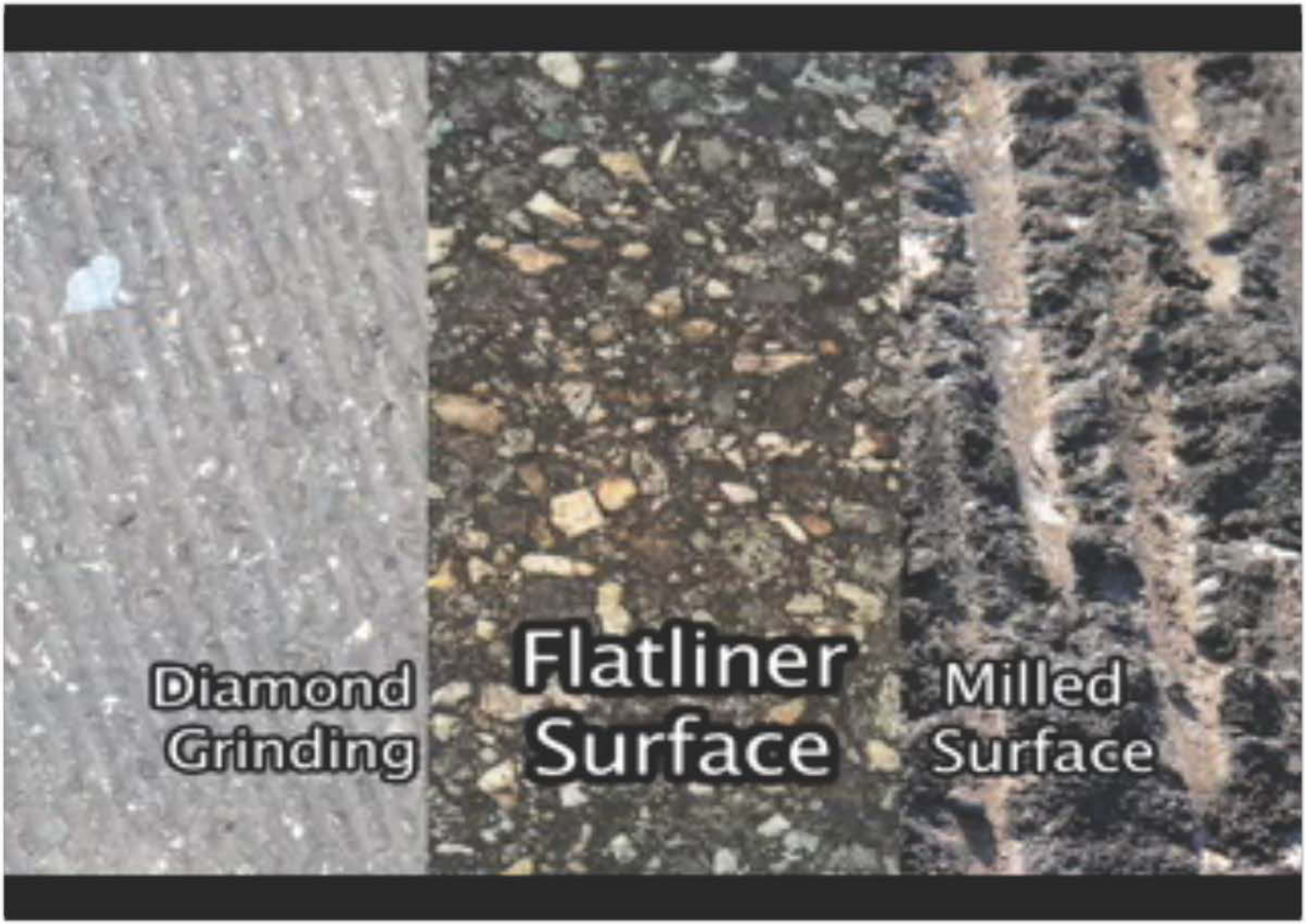
Diamond Grinding
Flatliner Surface
Milled Surface

Pavement Maintenance Tool

CRACK SEAL REMOVAL

ADAPT TO EXISTING MACHINES

Longitudinal Joint Repair

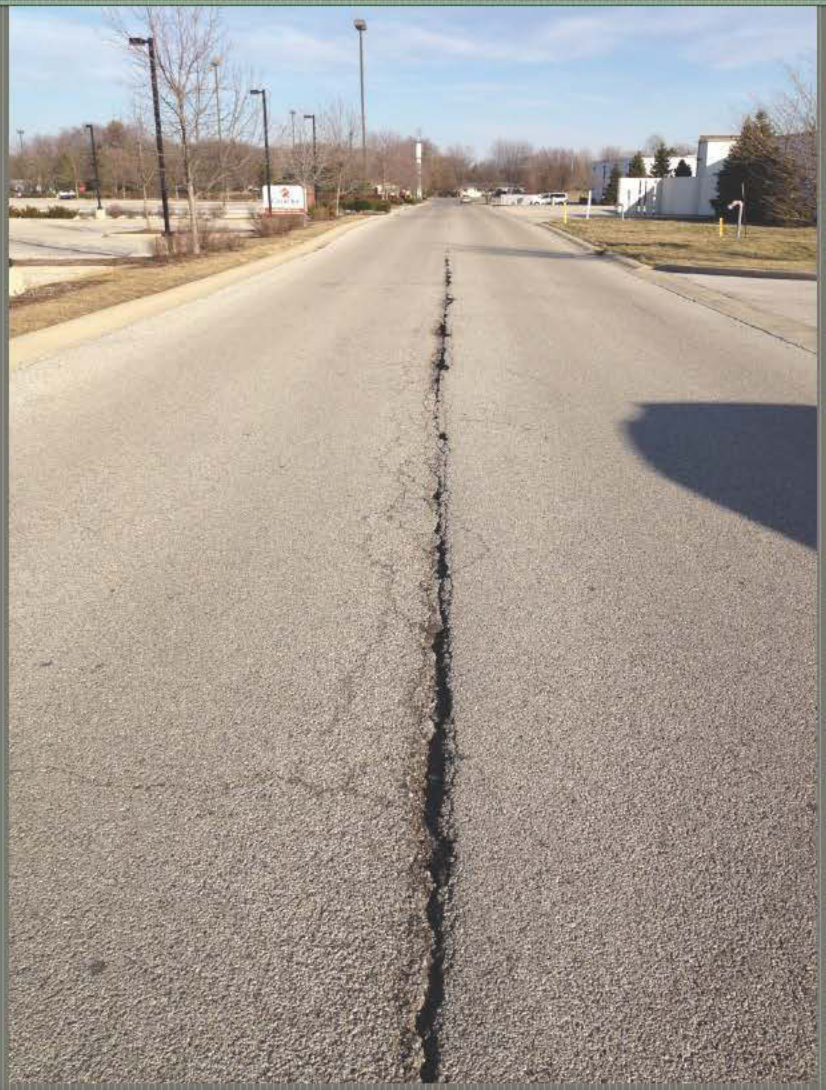

Failed Longitudinal Joint

Longitudinal Joint Repair Machine

Longitudinal Cuts

Finishing Joints

Micro surfacing joint

Questions?

Ches Latham
Keystone Engineering
317.271.6192
ches@keystonecutter.com

www.keystonecutter.com

HEART OF THE MACHINE

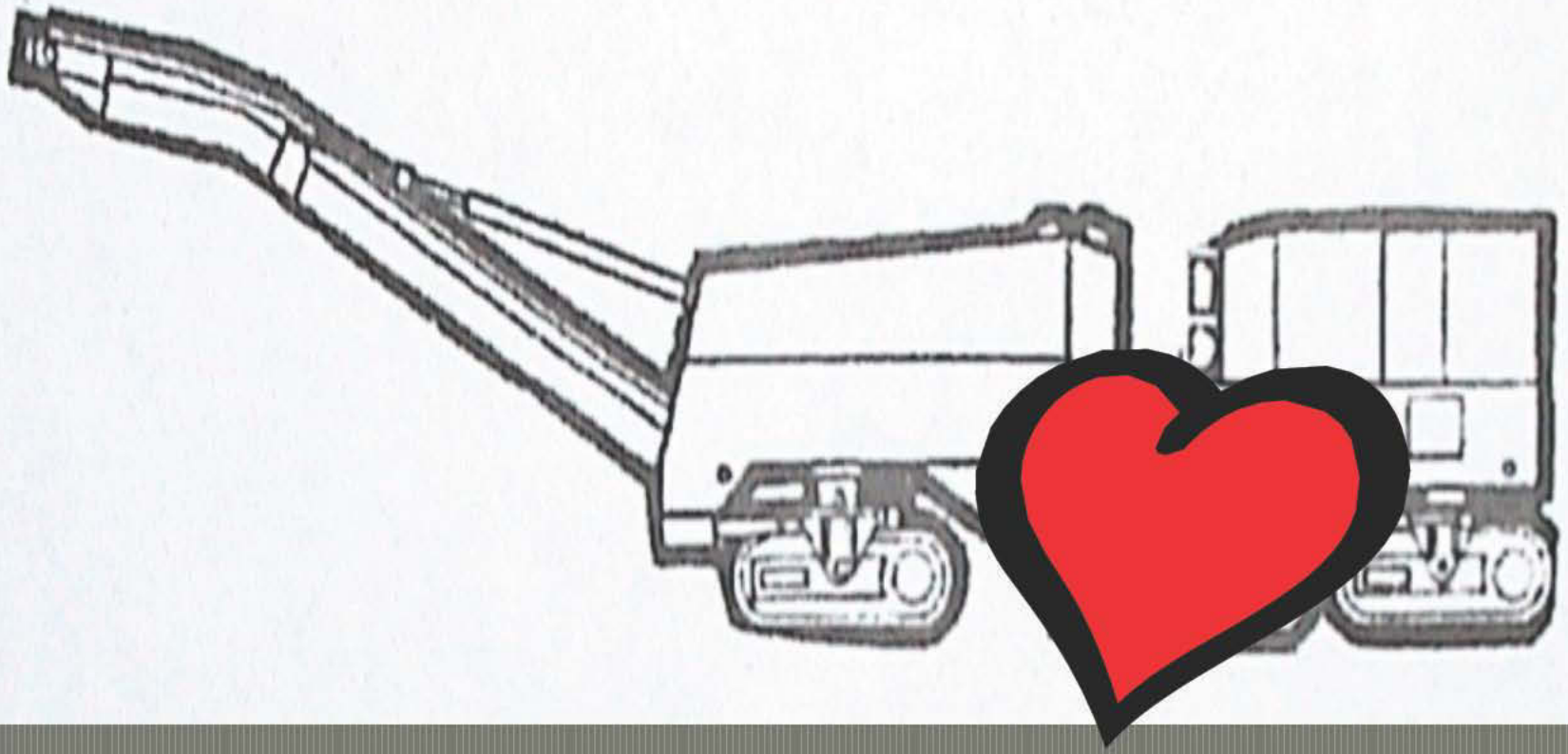

In Summary….

- Carbide grinding technology provides cost effective options for pavement maintenance

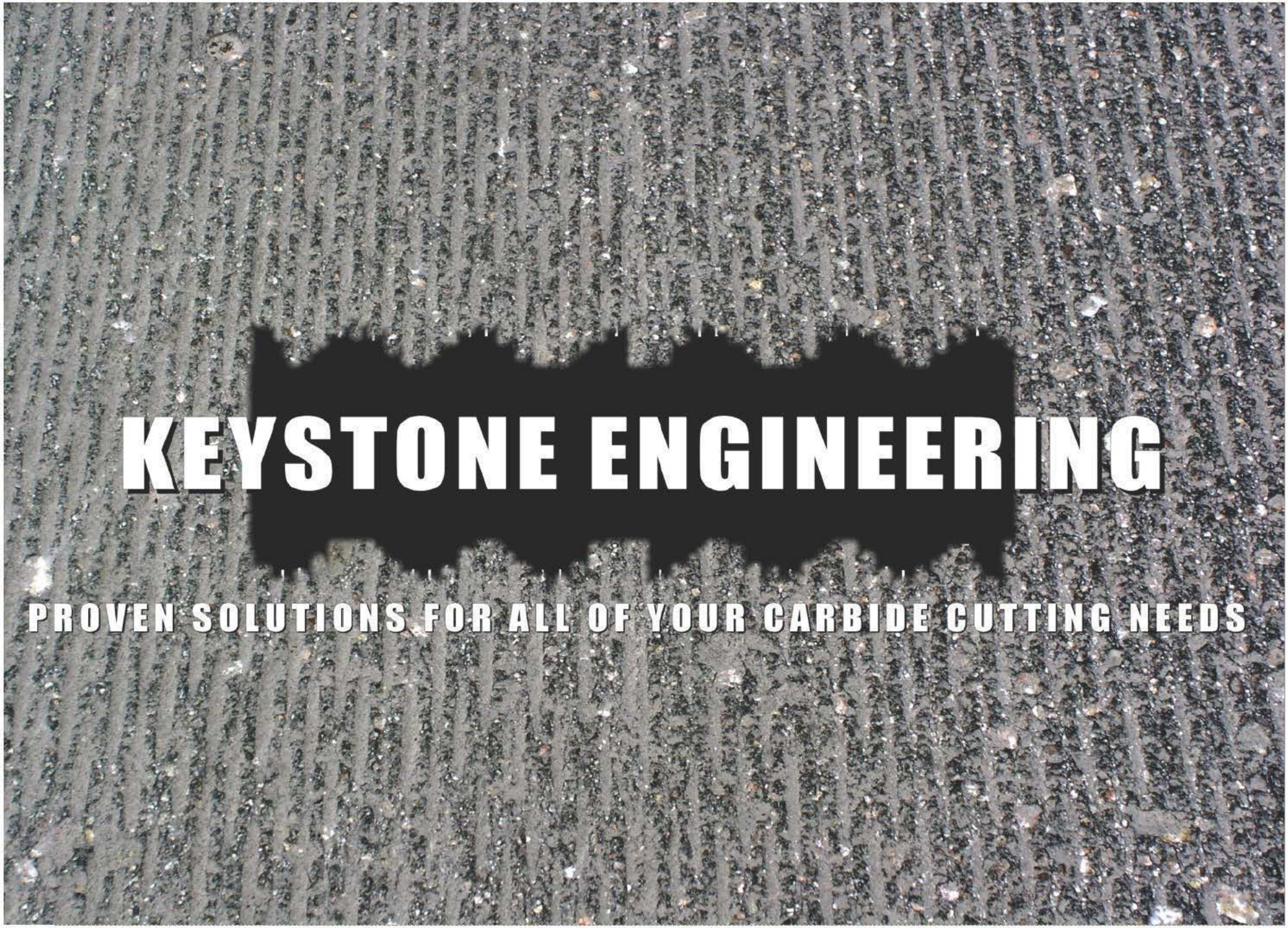
KEYSTONE ENGINEERING
PROVEN SOLUTIONS FOR ALL OF YOUR CARBIDE CUTTING NEEDS

MENARDS